DOE Advisory and Assistance Contract

Task Order 12: Standardized Transportation, Aging and Disposal Canister Feasibility Study

June 5, 2013

Prepared by

Revision History

Revision	Date	Reason for Revision	Originator
DRAFT	May 3, 2013	Draft Document for DOE Review	
FINAL	June 5, 2013	Final Report	

DISCLAIMER

This report was prepared as an account of work sponsored by an agency of the United States Government. Neither the United States Government nor any agency thereof, nor any of their employees, nor any of their contractors, subcontractors, or their employees, makes any warranty, express or implied, or assumes any legal liability or responsibility for the accuracy, completeness, or usefulness of any information, apparatus, product, or process disclosed, or represents that its use would not infringe privately owned rights. Reference herein to any specific commercial product, process, or service by trade name, trademark, manufacturer, or otherwise, does not necessarily constitute or imply its endorsement, recommendation, or favoring by the United States Government or any agency, contractor, or subcontractor thereof. The views and opinions of authors expressed herein do not necessarily state or reflect those of the United States Government or any agency, contractor, or subcontractor thereof.

Under the Standard Contract (10 CFR 961.11), DOE is obligated to accept only bare spent nuclear fuel. Acceptance of canistered spent nuclear fuel would require an amendment to the Standard Contract.

Executive Summary

Subsequent to the discontinuance of the Yucca Mountain, Nevada, site for the disposal of spent nuclear fuel and high-level waste, the Blue Ribbon Commission (BRC) on America's Nuclear future was formed by the Secretary of Energy at the request of the President to conduct a comprehensive review of policies for managing the back end of the nuclear fuel cycle, and to recommend a new strategy. The BRC Report on America's Nuclear Future, January 2012, recommended a strategy of eight key elements, one of which is associated with the work scope of this report.

- Prompt efforts to develop one or more geologic disposal facilities

  "Deep geologic disposal capacity is an essential component of a comprehensive nuclear waste management system for the simple reason that very long-term isolation from the environment is the only responsible way to manage nuclear materials with a low probability of re-use, including defense and commercial reprocessing wastes and many forms of spent fuel currently in government hands. The conclusion that disposal is needed and that deep geologic disposal is the scientifically preferred approach has been reached by every expert panel that has looked at the issue and by every other country that is pursuing a nuclear waste management program."

In response to the BRC report, the United States Department of Energy (DOE) issued in January 2013 the "Strategy for the Management and Disposal of Used Nuclear Fuel and High-Level Radioactive Waste". For geologic disposal, the Administration's goal is to have a repository sited by 2026; the site characterized, and the repository designed and licensed by 2042; and the repository constructed and its operations started by 2048. In conjunction with this strategy, the Department is undertaking disposal-related research and development work, including an evaluation of whether direct disposal of existing dry storage containers used at nuclear power utility sites can be accomplished in various geologic media, and evaluating thermal management options for various geologic media.

Historically, existing dry storage containers for Spent Nuclear Fuel/Used Nuclear Fuel (SNF/UNF)[1] were developed by the nuclear power operating utilities around their specific needs and the applicable licensing[2] requirements. As a consequence, existing dry storage systems have not been designed to meet any specific disposal criteria and the utilities are currently using various designs of large dry storage systems with canister capacities up to 37 Pressurized Water Reactor (PWR) or 89 Boiling Water Reactor (BWR) fuel assemblies. The installed base of dry storage systems includes both single-purpose (storage only) and dual-purpose (storage and transportation) storage systems. All of the new generation of dry storage systems are dual-purpose.

Although an evaluation of the suitability for ultimate disposal of existing dry storage containers is taking place the thermal management constraints of the disposal concepts under

[1] The terms "used nuclear fuel" (UNF) and "spent nuclear fuel" (SNF) are used interchangeably in this document. Spent nuclear fuel is an historic term, which by name implies that the nuclear fuel is "spent" after removal from a reactor, and is therefore a waste material. This term is used in the NRC regulations pertaining to this study and in many older reports and studies. Used nuclear fuel is a more recent term, and by name implies that the fuel, after removal from the reactor, may have further use (i.e., be reprocessed and the extracted fissile material reused in new fuel). For the purposes of this study the two terms are identical.
[2] In this report, the terms licensing and certification have been used interchangeably.

consideration[3], are likely to limit the number of assemblies per waste package to a much smaller number than existing dry storage systems. For example, unless very long pre-placement cooling periods were adopted, use of the enclosed disposal modes[4] (popular internationally), would require waste packages containing no more than 4 PWR or 12 BWR fuel assemblies, while larger packages (up to 12 PWR or 32 BWR sizes) could require either salt media or emplacement in hard rock. Larger packages could also be disposed of in crystalline (e.g. granite) or sedimentary rock (e.g. shale) with active ventilation for 200 years or longer. In comparison, for Yucca Mountain, the Transportation, Aging, and Disposal (TAD) canister system was designed to hold 21 PWR or 44 BWR fuel assemblies with a maximum heat load of 18 kW, and was intended to be the standard disposal container for emplacement in that open mode repository.

Per the DOE strategy, a repository is due to be sited by 2026 and an important consideration to its implementation will be the use of a Standardized, Transportation, Aging and Disposal (STAD) canister system. To assist the DOE in implementing a study for the feasibility of the development and licensing of STAD canisters and casks, the DOE issued a Statement of Work (SOW) for Task Order 12 under the existing Advisory and Assistance Services contract. The purpose of this scope of work is to provide technical ideas and recommendations, supported by evaluations/analyses, on approaches to better integrate STAD canister concepts into the waste management system.

This report documents the concepts, feasibility, advantages, disadvantages and recommendations for STAD canister systems developed by Energy*Solutions* and its team of partners: NAC International, Talisman International, Booz Allen Hamilton, TerranearPMC, Exelon Nuclear Partners and Sargent & Lundy, hereafter referred to as “the Team”.

SYSTEMS ENGINEERING APPROACH

A five-step Systems Engineering approach was used to perform the scope of work for the STAD canister feasibility study as follows:

- Step 1 – Review existing information, define functional criteria, establish framework
- Step 2 – Brainstorm and down-select to a shortlist of options
- Step 3 – Develop the selected STAD canister systems
- Step 4 – Assess the system-wide impacts of selected options
- Step 5 – Assess how, where, when the selected STAD canister systems could be deployed

The above approach is described in Section 3.0 and the results from the STAD canister feasibility study are summarized below.

During the study it was determined that pursuing a single STAD canister design was not yet feasible because the site geologic characteristics; particularly heat load capacity, will not be known until a repository site is selected. Standardizing on one STAD canister size is therefore not recommended at this time. Instead, we strongly recommend pursuing development of three

[3] “Repository Reference Disposal Concepts and Thermal Load Management Analysis”, FCRD-UFD-2012-00219, Rev.2

[4] FCRD-UFD-2012-00219, Rev.2, considers two major categories for waste package emplacement modes: “open” where extended ventilation can remove heat for many years following waste emplacement underground; and “enclosed” modes for clay/shale and salt media. For the enclosed modes, waste packages are emplaced in direct or close contact with natural or engineered materials which may have temperature limits. Enclosed modes include backfilled alcoves, vertical and horizontal borehole emplacement in borings constructed from underground, and deep boreholes drilled from the surface.

STAD canister options initially, with a down-select for fabrication after a repository site is chosen. This approach will shorten the overall schedule for loading the ideal STAD canister size once a repository is selected. Although costing more in the short term this will provide, as described later in this report, considerable life cycle cost savings. Towards this end, the initial design and licensing efforts should include the following three STAD canister sizes:

- Small (4 PWR or 9 BWR fuel assemblies);
- Medium (12 PWR or 32 BWR fuel assemblies);
- Large (24 PWR or 68 BWR fuel assemblies)[5].

The National Laboratories have evaluated several open mode and enclosed mode repositories that are detailed in the report *Repository Reference Disposal Concepts and Thermal Load Management Analysis*, FCRD-UFD-2012-00219. The disposal concepts being evaluated include three open mode (Shale Unbackfilled, Sedimentary Backfilled, and Hard Rock Unsaturated) and four enclosed mode (Crystalline, Generic Salt Repository, Clay/Shale and Deep Borehole). The quantity of UNF assemblies that can be disposed of in a waste package is predominantly driven by the thermal limitations of the engineered and geological barriers in the near term. With the exception of the deep borehole concept, which likely would require waste packages of a nominal single assembly size, a small STAD canister containing 4 PWR and 9 BWR assemblies is considered to be the most flexible for the rest of the disposal concepts. However, as described in Section 4.5, using small STAD canisters potentially comes at a great cost and has significant impacts on utilities (to achieve the packaging capacity of a large STAD canister, utilizing small STAD canisters would increase the packaging time by approximately a factor of five). All options for STAD canister sizes need to be considered, in conjunction with evaluating the potential for direct disposal of Dual Purpose Canisters (DPCs), which is an area that the National Laboratories are currently investigating[6].

Another fundamental recommendation of this study is that under normal procedures, the UNF should not be removed from a site until it is shutdown and the reactor operations have permanently ended. Delaying required removal of UNF until plant retirement removes the need for sites that are operating to package or re-package UNF into small or medium STAD canisters; a labor intensive operation that would impact plant operation. Operating plants that would benefit from shipping bare fuel from spent fuel pools to a CISF, rather than expanding dry storage, will still have that option. Once power production activities have permanently ended, the site operator will have more flexibility for loading UNF from the spent fuel pool into STAD canisters, or shipping bare UNF in casks for packaging at a repository or, per the DOE strategy, at the Consolidated Interim Storage Facility (CISF). The results from the logistics analysis and evaluation to support this approach are presented in Section 4.5 and, building on this approach, the goals, strategies and perceived benefits for the proposed STAD canister concepts are as follows:

[5] Note that the 21 PWR or 44 BWR Yucca Mountain TAD design is also included in the large STAD canister category

[6] Howard, R., J. Scaglione, J. Wagner, E. Hardin, and M. Nutt., 2012, *Implementation Plan for the Development and Licensing of Standardized Transportation, Aging, and Disposal Canisters and the Feasibility of Direct Disposal of Dual Purpose Canisters*, FCRD-UFD-2012-000106. Oak Ridge, TN, U.S. Department of Energy.

Goals (what the program should achieve):

- Goal #1: Minimize impacts on utility operators as they perform their primary function – producing electricity safely. Once plants are decommissioned, the goal of minimizing impacts on utility operators continues by releasing the site for sale, or reuse as soon as possible.
- Goal #2: Minimize the wasted investment in storage systems that are not integrated into the overall disposal system.
- Goal #3: Maximize the operating efficiency of the integrated waste management system by centralizing repackaging functions.

Goals # 1-3 are intended to create discernible mutual operational and financial benefits for the Utilities and DOE. It is believed that the efficiency of the use of reactor site decommissioning funding will improve (from a present value perspective) by delaying plant physical decommissioning for a period of 30 to 40 years after retirement of the reactor(s) and following this revised approach to UNF management.

Strategies (how the goals can be met):

- Strategy #1: No UNF in dry storage at Independent Spent Fuel Installation (ISFSI) pads is removed from these nuclear sites until the plants are retired and deemed to be permanently shutdown. Bare UNF may be transported from pools at interested operating sites in transportation casks for packaging into STAD canisters at the CISF.
- Strategy #2: DOE will remove the UNF in dry storage at existing shutdown sites when, as stated in the DOE UNF strategy document, operations at the Pilot Interim Storage Facility (PISF) begin in 2021.
- Strategy #3: As plants shut down, cooperating utilities will load UNF from pools into STAD canisters. STAD canisters will be transported to the CISF for storage, or directly to a repository (depending on timing). Onsite storage at the utility will only be required if transportation resources are not available. As part of this approach, a sufficient quantity of licensed STAD canisters will be provided by the DOE to licensee sites that volunteer to load fuel from their pools into STAD canisters after shutdown. The quantity of STAD canisters provided will be sufficient to move all spent fuel from site spent fuel pools within 15-20 years after unit retirement.
- Strategy #4: All UNF will be removed from participating retired units within 30-40 years after retirement.
- Strategy #5: Operating plants that express an interest in shipping bare UNF from their pools to the CISF for packaging into STAD canisters will be supported. Note. Per the DOE strategy document, full packaging operations at the CISF are due to begin in 2025.
- Strategy #6: To support the goals, the UNF shipment prioritization shifts to: (1) Remove UNF from currently decommissioned sites, (2) Remove bare UNF from pools at interested operating reactors for shipment to the CISF, (3) Remove UNF from retired site spent fuel pools in STAD canisters as the units retire, (4) Remove UNF stored in dry storage from ISFSI pads as the units retire, and (5) Remove UNF from dry storage pads at operating reactors.

Benefits:

- Benefit #1: DOE can honor the standard contract by taking bare UNF from utilities that choose to load it. DOE and utilities have the flexibility to negotiate which canistered fuel they take first.
- Benefit #2: DOE does not interfere with nuclear utility operations without an invitation.
- Benefit #3: It is believed that the above approach will be neutral or better from a decommissioning funding sufficiency perspective for the utilities. The combination of bare fuel shipments to a CISF for loading into STAD canisters (Strategy 1), and having utilities load fuel from spent fuel pools into STAD canisters after shutdown (Strategy 3), minimizes the amount of UNF loaded into DPCs and the significant costs (DPC procurement, DPC to STAD canister repackaging operations, and disposal of DPC carcasses) associated with loading all UNF into storage systems that have no current disposition path.
- Benefit #4: Performing all operations to repackage UNF from existing DPCs into STAD canisters at a central facility will improve efficiency and allow greater investments in standard equipment and processes with the economies of scale provided by a central location.

STAD CANISTER SYSTEM CONCEPTS

Conceptual drawing packages for the small, medium and large STAD canister systems have been produced and are provided in Appendix D. Detailed descriptions of the canister concepts and the design approaches used for the criticality analyses and the structural, shielding and thermal evaluations are provided in Section 4.1. These systems are designed to accommodate all current U.S. commercial PWR and BWR fuel assembly types[7]. The STAD canisters can accept PWR and BWR fuel with burnup levels of up to 80,000 MWd/MTU and 70,000 MWd/MTU, respectively, and with initial ^{235}U enrichment levels of up to 5.0 wt%. The STAD canister designs will also be able to accommodate partial, damaged or Mixed Oxide (MOX) fuel assemblies, as well as intact PWR and BWR assemblies. Illustrations of the three STAD canister concepts are provided in Figure ES-1

[7] Note that "Next Generation" reactor fuel types (e.g., the AP1000 and Advanced Boiling Water Reactor (ABWR)) are not accommodated by this STAD canister design, since they are longer than the general population of current commercial PWR and BWR fuel assembly designs. In addition, it may be economically preferable to develop separate STAD canister designs when required to accommodate unusual fuel assembly designs, such as South Texas Project fuel and Combustion Engineering 16x16 assemblies with control rod inserts.

Figure ES-1. STAD Canister System Concepts

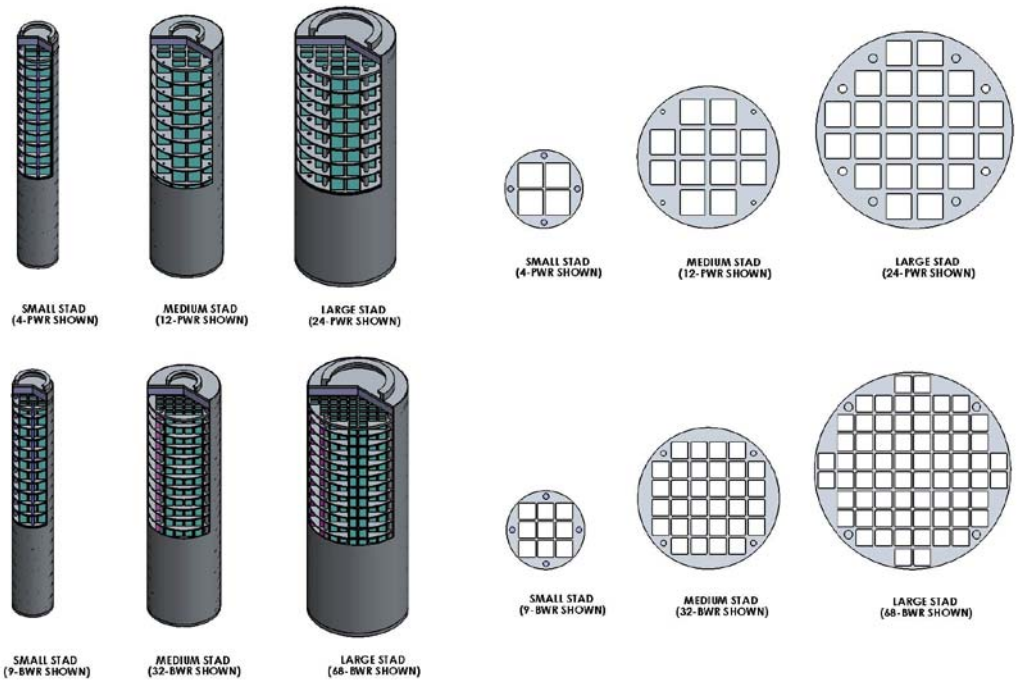

REGULATORY AND CONTRACT COMPLIANCE

Developing viable concepts for a new standardized canister that could be used for transportation, storage and disposal requires an understanding of the regulatory design constraints. The regulations that apply to transportation (10 CFR 71) and storage (10 CFR 72) are well understood and have been in common use for many years, even though the licensing requirements under the two parts are not perfectly harmonized. For example, the licensing Certificate of Compliance (COC) period for a transportation cask is five years, but the COC period for a storage cask is up to 40 years. These disconnects have been addressed through amendments and other efforts by the licensing applicants over the years, and this has made the licensing system workable. Now the Nuclear Regulatory Commission (NRC) is considering changes to the regulations to better harmonize the requirements for transportation and storage. Both transportation and storage cask licenses are based on a set of deterministic performance requirements that makes the design process fairly straightforward. The regulatory changes being contemplated do not appear to change the basic design and safety requirements. The NRC has indicated any new rulemaking affecting harmonization of the regulations under 10 CFR 71 and 10 CFR 72 would not be likely before 2017.

Regarding regulations for disposal, unfortunately no new generic regulations have been promulgated. Some portions of the existing 10 CFR 60 and 10 CFR 63 would be considered for any new rulemaking but it is not currently clear what approach would be taken for a new generic disposal regulation. Long term performance of a disposal package is determined more by corrosion performance and criticality prevention than by anything else. In the Yucca Mountain license application, no corrosion protection credit was assigned to the canister in the disposal configuration. All of the corrosion credit was provided to the disposal overpack that was made of highly corrosion resistant INCONEL (alloy 22). Regardless of the geologic media selected

for future repositories in the US, a similar assumption could be made regarding canister design requirements.

If the long term corrosion performance requirements were to be met by a disposal overpack or waste package, and the canister only had to deal with thermal and criticality issues in the disposal environment, there is a path forward for design of STAD canister systems prior to development of new repository licensing requirements. That approach would be to design three canister sizes (small, medium and large) to meet the deterministic requirements for transportation and storage. Designing and licensing a small, a medium, and a large canister would bound the acceptable ranges of thermal loading for any repository geology that is selected. These initial STAD canister designs would also be engineered to meet the worst case criticality constraints for ultimate disposal.

Early design and licensing of these three STAD sizes for transport and storage would shorten the time required to provide STAD canisters once a repository is selected. Doing the transport and storage portion of the design and licensing work in advance would shave 2-3 years off of the schedule to provide STAD canisters for packaging or re-packaging used fuel. Once the geology of the host repository is identified, the appropriately sized canister for the allowable heat loading would be known, and licensing for disposal could be contemplated as an add-on. To minimize the investment in DPCs that cannot be used in any repository, DOE could pursue fabrication and loading of the appropriately sized STAD as soon as a repository site is selected. This work would be done at risk prior to licensing of the STAD canister for disposal.

The use of conservative STAD canister designs would minimize the disposal licensing risk, particularly since the STAD canister is likely to be a minor component in the overall engineered barrier system. To expedite STAD canister development, DOE could submit topical reports on an integrated approach to meeting disposal requirements for the selected STAD canister size. These topical reports would help map the process for adding disposability to the canister licenses as part of the overall repository engineered barrier system. Interactions with the NRC over those topical reports would be beneficial for both the canister disposal licensing and development of the engineered barrier disposal system. This approach would allow the deterministic licenses for storage and transportation to proceed under 10 CFR 72 and 10 CFR 71, with conservative enveloping design approaches to criticality prevention over the long term and would provide material compatibility with potential disposal overpack (or waste package) designs.

Like Yucca Mountain, any future repository license application is likely to be conservative when initially submitted. Once licensed for initial operations, refinements to the repository design might be pursued that would have operational safety and cost benefits. Continuous advancements in modeling, in materials science and in other aspects of repository design should be incorporated through license amendments during the repository's operational life. Evolutionary improvements to the STAD canister design should be contemplated as changes to the initial license are proposed.

To further explore the licensing requirements for a PISF and for the CISF, which will have the mission to cut open existing DPCs and repackage bare UNF into STAD canisters, informal discussions were held with the NRC to discuss their views on the licensing construct required. The feedback was that a PISF seemed to be analogous to the current ISFSIs that the NRC has licensed at operating and shutdown plant sites. A PISF does not appear to have any additional UNF handling requirements, and would seem to be licensable under the current 10 CFR 72

criteria. For the CISF, it was suggested that existing 10 CFR 72 criteria may not be sufficient for a full CISF that includes a significant UNF repackaging mission using either a pool or a hot cell. Even the licensing basis for UNF storage in a pool at the GE Morris site does not seem to be sufficient for the scope of fuel handling anticipated at the full CISF DOE is considering. However, the NRC considered that they can supplement existing criteria in 10 CFR 72 in conjunction with NRC regulatory guidance noted below so as to provide the licensing and regulatory framework for licensing a CISF. The NRC can also provide Interim Staff Guidance on discrete technical issues related to repackaging as needed.

The NRC staff's informally expressed reservations notwithstanding, an NRC regulatory review of a comprehensive CISF design that included pools, hot cells, canister repackaging, and handling of heavy loads seems to be within their grasp. This is based on the fact that the Yucca Mountain surface facility design had these types of facility operations, and the NRC's review of those capabilities indicated DOE's descriptions of Systems, Structures and Components (SSCs), equipment, and process activities were reasonable.[8]

The NRC's detailed experience base to address some of these types of considerations extends beyond that which is typically employed in 10 CFR 71 and 72 licensing. To take one example of heavy loads, two NRC regulatory reports (NUREGs) address this issue, and the focus of these NUREGs[9] involves the design of single-failure-proof cranes and heavy load paths, particularly in the areas around the SNF pools. The NRC staff can easily adopt and adapt this type of supplemental guidance to review a CISF license application. A straightforward way to do this would be to develop three CISF licensing guidance documents: 1) a Standard Format and Content Regulatory Guide; 2) a Standard Review Plan for a CISF, and 3) Interim Staff Guidance. These documents could describe the detailed regulatory expectations that would pertain to a CISF and would reference and describe how supplemental guidance would apply. When preparing the contents of these two documents, the NRC staff may see a need for a rulemaking. When the NRC issues the 10 CFR 71 and 72 Certificates of Compliance for the STAD canisters, the NRC can be expected to issue Conditions of Use and Technical Specifications, which would address STAD canister specific requirements.

We recommend DOE consider having a series of informal meetings with the NRC to explore the limits of what can be done under current 10 CFR 72 licensing or what needs to be supplemented in order to license the CISF. The NRC is already discussing licensing needs for a combination of future storage, transportation and disposal needs. A new working group on these issues may be a good approach. The feedback from the recent NRC request for comments on potential revisions to 10 CFR 71 and 10 CFR 72 will be a good starting point for more detailed discussions between the applicant and the regulator.

LEVEL OF EFFORT NEEDED FOR DETAILED STAD CANISTER DESIGN LEADING TO A VIABLE LICENSE APPLICATION

The previously described STAD canister concepts are affected by regulations for storage, transport and disposal. Given the overlapping licensing activities, the Team sought to estimate

[8] Technical Evaluation Report on the Content of the U.S. Department of Energy's Yucca Mountain Repository License Application – Pre-closure Volume: Repository Safety Before Permanent Closure (NUREG-2108)

[9] NUREG-0554, Single Failure Proof Cranes for Nuclear Power Plants; NUREG-0612, Control of Heavy Loads at Nuclear Power Plants: Resolution of Generic Technical Activity A-36; and ASME Code NOG-1, Rules for Construction of Overhead and Gantry Cranes (Top Running Bridge, Multiple Girder)

the level of effort that would be required to complete the detailed design required for a viable license application. The STAD canister licensing activities will include multiple regulatory drivers:

i. 10 CFR 72 will cover storage at the CISF and potential packaging functions.
ii. Operational considerations associated with packaging fuel into the STAD canisters at reactor sites, which may require use of provisions from 10 CFR 50, 10 CFR 71 for transport requirements, and
iii. an equivalent 10 CFR 60 covering disposal requirements.

At this time the Code of Federal Regulation does not exist for the different geologic repositories being considered and neither are there the specific regulations or regulatory guidance that may be needed for CISF repackaging operations. Therefore the estimated level of effort was based on previous Yucca Mountain experience including TAD canister development.

TAD canister development was performed as a two phase project split into initial concept and final design/licensing application activities. The Phase 1 concept phase provided first level sizing calculations and design drawings for the integrated system addressing repository (10 CFR 63), transport (10 CFR 71) and storage (10 CFR 72) licensing analyses. Phase 2 consisted of detailed regulator licensing design calculations and preparation and submittal of the three different Safety Analysis Report (SAR) applications to the NRC. The Task Order 12 level of effort estimating exercise was bounded by this SAR submittal to the NRC and does not include any effort associated with moving the application from submittal through receipt of license. This is because after submittal of the SAR to the NRC, the TAD canister projects were terminated and thus, this effort was not part of the Yucca Mountain project record data.

In consideration of the different system configurations and three different SAR licensing efforts, the projected cost for designing and licensing the small, medium and large STAD canister designs, i.e. the Cost Optimization STAD canister development schedule described in Section 4.4, was estimated to be $25.9 million in 2013 dollars. The design and licensing of a single STAD canister, initiated after the repository geology is determined, i.e. the Baseline STAD canister development schedule described in Section 4.4, was estimated to be $12.8 million in 2013 dollars.

The difference in cost for the Baseline and the Cost Optimization approaches is $ 13.1 million for STAD canister design and licensing activities (in 2013 dollars). Although the cost for licensing the three different STAD configurations in the 2024 time frame has a higher cost (estimated to be $39.8 million) than licensing one system configuration in 2028 (estimated to be $23.1 million), significant total project cost savings, as described later in this report, are achieved by initializing fabrication of hardware and loading of STAD canister systems approximately five years earlier than the Baseline approach.

TIMELINE FOR STAD CANISTER DEVELOPMENT THROUGH REPOSITORY OPERATIONS

The Team developed and analyzed two STAD canister development schedules: (i) Baseline and (ii) Cost Optimized. As a starting point for the production of a detailed STAD canister development schedule, the Team used the key milestone dates from the DOE's strategy document in conjunction with the following assumption about how current elements of the waste management system would work in the future:

- Operating nuclear power plants will not accept packaging UNF into any canister that requires more labor and takes more time per ton of fuel collected than the dry storage canister systems currently being used;
- Operating nuclear power plants may be willing to load bare UNF from spent fuel pools into bare UNF transportation casks.
- No repackaging of existing transportable dry storage systems using welded canisters will be done at utility sites. All of these canisters will be shipped elsewhere for repackaging;
- Shutdown utilities that still have spent fuel pools and other plant capabilities may be willing to package bare UNF from pools into STAD canisters or load bare UNF into bare UNF transportation casks;
- Shutdown utilities that still have spent fuel pools and other plant capabilities may be willing to re-package UNF from bolted lid dry storage systems into STAD canisters for shipment to a CISF or repository;
- The cost of designing and licensing STAD canisters is small compared with the overall waste management system and the cost of delays to final waste disposition;
- Design and licensing of any new STAD canister based system will take 3+ years, followed by an initial fabrication lead time of 2 years.

The Baseline development schedule assumes DOE will have a low tolerance for project scope risk associated with pursuit of canister designs before all repository requirements are identified and understood. This results in acceptance of higher life cycle waste management costs. The Cost Optimized development schedule is an alternative approach to interim management of UNF pending the opening of a repository, which accelerates the expenditure of capital funds on CISF repackaging facilities and offers an accelerated shift to storage technologies that directly support disposal. However, the Cost Optimized approach does carry the project scope and schedule risk of adding disposal licensing to the STAD canister designs after the initial designs for storage and transportation were completed and STAD canisters were fabricated. Keys to the success of the Cost Optimized case are the following four pre-requisites:

1. Design and licensing of all three STAD canister sizes (a small, medium and large STAD) before the repository host site is selected (as opposed to the Baseline Case where the STAD canister configuration is not established until the repository site is selected). The current large DPCs (e.g. 37 PWR or 89 BWR) may become a viable extra-large STAD canister in the future, but that will take considerable work by the National Laboratories, so a STAD canister in that size range was not considered in this report;
2. Earlier construction of the spent fuel pool and wet repackaging capability at the CISF;
3. Contract negotiations with the utilities to support packaging bare UNF into STAD canisters after the plant ceases power production permanently;
4. Design and licensing of dry storage and transportation systems that can accommodate UNF in a STAD canister configuration.

Overall the two STAD canister development schedules analyzed by the Team each have advantages and disadvantages. Figure ES-2 shows the key elements of the two options side by side.

Figure ES-2. Comparison of Key Milestones in the Baseline and Cost Optimized STAD Canister Development Schedule.

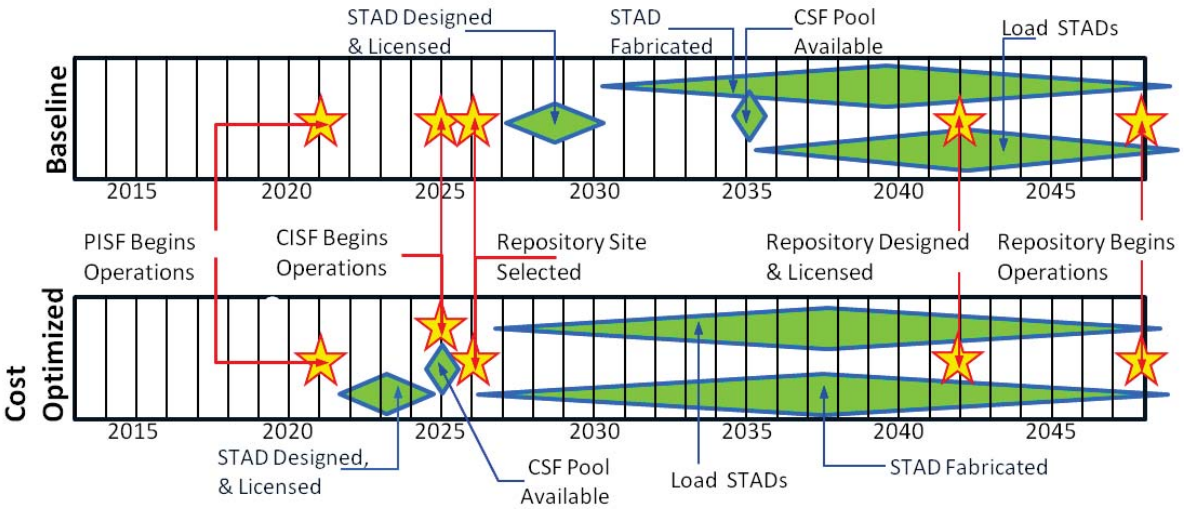

As Figure ES-2 illustrates, the design and licensing of the STAD canister (at least for storage and transport) occurs much earlier in the Cost Optimized version of the schedule. The pool for packaging UNF into STAD canisters is also available much earlier in the Cost Optimized schedule. Neither schedule, however, affects dates that the DOE established in its strategic response to the BRC recommendations.

In the Baseline schedule, the capital costs for construction of major facilities at the CISF are spread out over a much longer time frame. This would reduce annual operating costs by delaying construction of the repackaging pool until needed to prepare STAD canisters for emplacement in the selected repository's engineered barrier system. The downside of this approach is that utilities will continue loading UNF headed for dry storage into large DPCs. Due to the heat load associated with their large storage capacity and the nature of their criticality controls, large DPCs are not likely candidates for direct disposal, so repackaging into STAD canisters will ultimately be required. Each of these expensive canisters purchased therefore represents a large sunk cost that does not contribute to the permanent disposition of the waste. The Cost Optimized approach accelerates the expenditure of capital funds on CISF facilities and makes a repackaging pool available much sooner than in the Baseline schedule. Design, certification and fabrication of STAD canisters also should occur much faster in the cost optimized schedule. This adds to both the capital and operating costs in the near term. On the balance, this approach offers an accelerated shift to storage technologies that accommodate disposal requirements and limitations. This accelerated move to a storage solution that is integrated with final disposition of the waste could reduce life-cycle costs by $340 to $670 million, with a delta additional cost of $13.1 Million for the design and licensing of all three STAD canister sizes versus only one size (Baseline Case).

The life cycle cost savings of the Cost Optimized approach are expected in three primary areas:

i. <u>Fewer DPCs to purchase and load</u>

   Fewer DPCs will ultimately need to be purchased and loaded with UNF if design and licensing for three STAD canisters commences before final selection of the repository

site. STAD canister design and licensing is expected to take approximately three years, with an upper schedule estimate of five years. If STAD canisters for loading are available three to five years earlier, 400 to 650 fewer large DPCs will need to be purchased, respectively[10]. The cost savings from purchasing fewer DPCs could range from $320 - $520 Million[11].

ii. Fewer DPCs to dispose

This STAD feasibility study has assumed that after the DPCs are unloaded they will have no future value and will have to be disposed. Having fewer DPCs to dispose will result in life-cycle cost savings of $20 to $32 Million.

iii. Fewer DPCs to unload and transfer fuel into STAD canisters at the CISF

Operations at the CISF may or may not change significantly for the scenarios we have evaluated. When fewer DPCs need to be unloaded, life-cycle cost savings of $80 - $120 Million may be achieved.

Our conclusion is that the schedule for STAD canister development is highly dependent on DOE priorities and the level of project scope and schedule risk DOE is willing to accept regarding early completion of STAD canister designs that could be affected by subsequent repository performance requirements. The schedule will also be affected by contract negotiations with the utilities, and on the timing for authorizing legislation.

STAD CANISTER SYSTEM SCENARIOS AND LIFECYCLE COST ANALYSIS

The STAD canister concepts were evaluated using the Total System Model (TSM), which was originally developed for the Civilian Radioactive Waste Management System (CRWMS).

The TSM was used to perform a logistical analysis of four STAD canister sizes: (small, medium and large, plus the 21 PWR/44 BWR TAD used in the Yucca Mountain design, which is intermediate between the medium and large canister sizes), with the overall intent of identifying advantages and disadvantages, solutions to overcoming the disadvantages, and evaluating the performance of the recommended approach of only retrieving UNF from reactor sites when the reactors have been permanently retired. The analysis used a set of assumptions covering the UNF, transportation cask fleet, storage casks, reactor sites, PISF/CISF and repository, to analyze 17 operational scenarios (see Table 4-5 in Section 4.5). The scenarios were developed to cover variations in the following key parameters, noting that STAD canister loading at reactor sites was assumed only in scenarios where acceptance was limited to shutdown sites.

- Reactor Operations Acceptance (accept from operating reactors or only from shutdown reactors)
- Reactor Cask Acceptance (DPCs/Transportable Storage Casks (TSCs), bare UNF then DPCs/TSCs, or STAD canisters loaded at reactors, then DPCs/TSCs)
- STAD canister Size

[10] These purchases will not impact what has traditionally been DOE's cost for the program because the utilities have been purchasing the DPCs, and then compensated for the purchase and storage of the DPCs from the Judgment Fund, a Department of Justice account. However, recent Office of Nuclear Energy policy is to evaluate the true life-cycle cost to the taxpayer, so these savings should be considered.

[11] The Life Cycle Cost analysis of the Total System Model scenarios in Section 4.5 does not include the purchase costs of DPCs.

A key assumption for acceptance from shutdown sites only is that they will be emptied of UNF within 30 years, which keeps the maximum annual acceptance rate at the CISF to no more than 4,000 Metric Ton (MT)/year. If a maximum acceptance rate of 3,000 MT/year is desired for shutdown site only pickup, the maximum time for emptying sites would be increased to 40 years. The seventeen operating scenarios are shown in detail in Table 4-5. Those scenarios involving acceptance of only DPCs and TSCs from shutdown and operating sites (scenarios 1, 5, 9, and 13) correspond to the Baseline STAD Canister Development Schedule shown in Figure ES-2. The remaining scenarios correspond to the Cost Optimized STAD canister development schedule shown in Figure ES-2.

From the TSM logistical analysis the following advantages and disadvantages were identified:

1. In general, and as would be expected, decreasing STAD canister size increases the processing time at reactors, the number of shipments, the number of CISF storage casks required, the receipt and processing requirements at the CISF, and the radiation doses to workers and the general public. Transportation costs and CISF handling and storage costs are also increased as STAD canister size decreases. The counterpoint to these disadvantages is that, with the exception of the deep borehole disposal concept, a small STAD canister is considered to be the most flexible for the open mode (Shale Unbackfilled, Sedimentary Backfilled, and Hard Rock Unsaturated) and enclosed mode (Crystalline, Generic Salt Repository, Clay/Shale and Deep Borehole) disposal concepts currently being evaluated by the National Laboratories.
    - An estimate of the potential radiological impact of loading STAD canisters of different sizes was made using the worker dose results from the Yucca Mountain Environmental Impact Statement (EIS). The results in Table 4-7 show that compared with a base case where large capacity DPCs are loaded, the increase in dose (Person-Rem) is 2,640 Person-Rem for 12 PWR/32 BWR STAD canisters and 12,830 Person-Rem where single 4 PWR/9 BWR STAD canisters are loaded and handled. If 4 small STAD canisters can be loaded and handled at the same, which would require existing plant processes and equipment to be redesigned to be used for multiple STAD canisters in parallel (e.g., equipment used for draining, vacuum drying, and sealing), then the increase would be reduced to 1,710 Person-Rem. This demonstrates how mitigating actions (in this case, equipment and operations changes) can reduce the radiological impact of loading smaller STAD canisters.
    - The radiological impacts of transportation from the reactor sites to the CISF were estimated from the analysis performed for the Yucca Mountain EIS. The results in Table 4-12 show that compared with a base case where large capacity DPCs are loaded, the increase in dose (Person-Rem) for 12 PWR/32 BWR STAD canisters is 3,060 for workers and 1,070 for the public. Assuming that four 4 PWR/9 BWR STAD canisters can be transported in one cask results in a smaller Person-Rem increase of 1,980 for workers and 690 for the public.
2. Shipping UNF in bare UNF casks from reactor sites increases the number of shipments and transportation costs, but significantly shortens the receipt period and allows bare UNF received at the CISF to be loaded into STAD canisters for storage. This reduces wasteful investments in storage systems that are not compatible with the repository system and reduces the amount of re-packaging that must take place prior to consignment

of the UNF to the repository. This is shown in Figure ES-3, where Scenario 2 ships bare UNF, and is further discussed in Section 4.5.

Figure ES-3. UNF Acceptance Profiles for Scenarios 1-3 and 17 (Metric Tons)

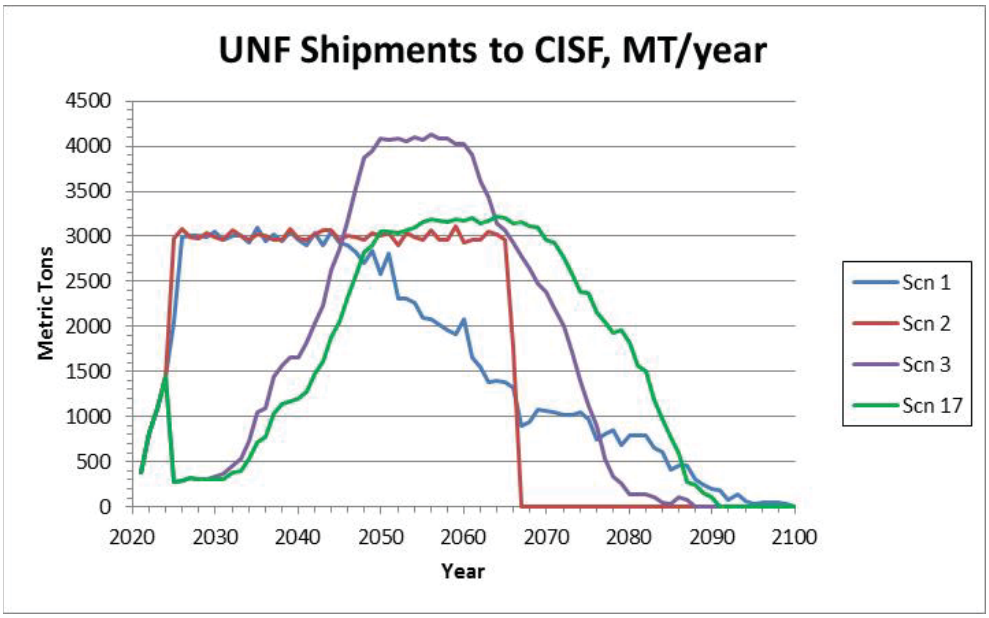

3. Accepting UNF from shutdown reactors only, while increasing transportation costs, results in a shorter acceptance period and reduced storage costs at the CISF. This is shown in Figure ES-4, where Scenarios 3 and 17 accept UNF from shutdown reactors only, and is further discussed in Section 4.5.

Figure ES-4. UNF Storage at CISF for Scenarios 1-3 and 17 (Metric Tons)

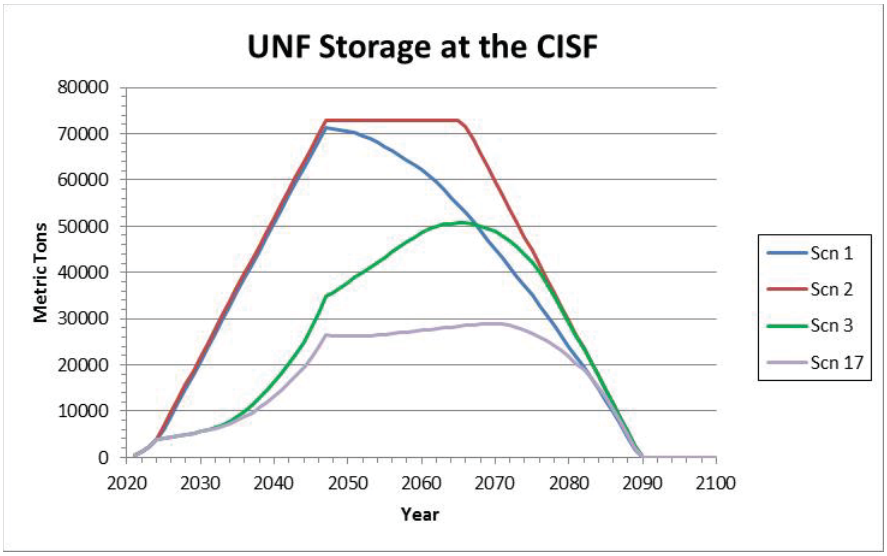

4. Repository waste package emplacement heat limits can have a significant impact on CISF to repository shipping rates and CISF operations. This is illustrated in Figures ES-5 and ES-6 and is further discussed in Section 4.5.

Figure ES-5. Shipment Rate to Repository, 21/44 STAD canisters, with and without 8 kW Emplacement Limit

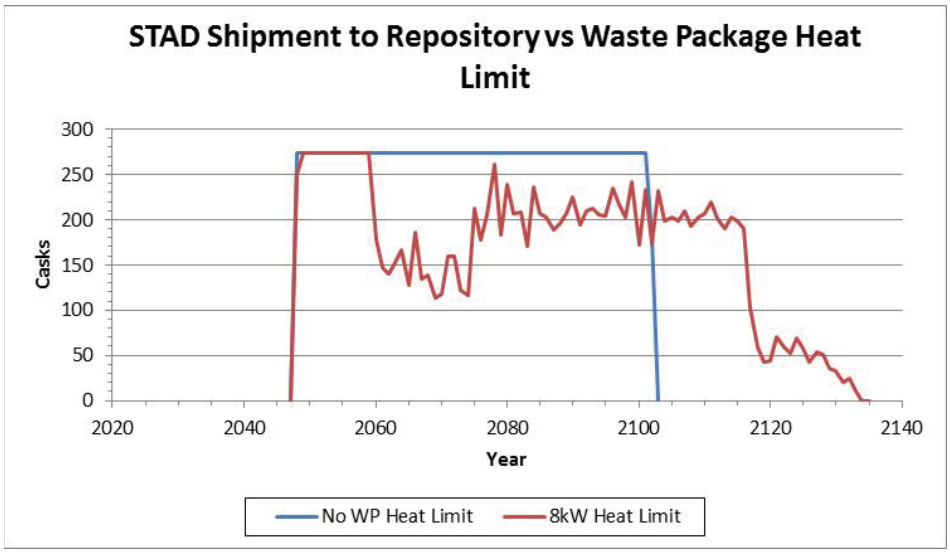

Figure ES-6. CISF Casks in Aging, 21/44 STAD canisters, with and without 8 kW Emplacement Limit

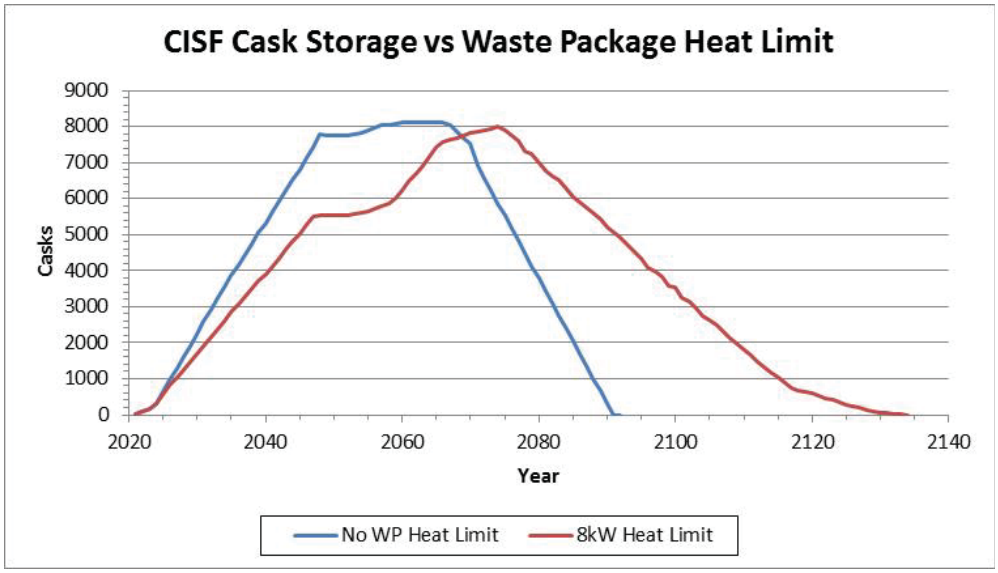

5. For scenarios involving acceptance of bare UNF or STAD canisters from shutdown reactors, the time frame for cleanout of reactor pools is consistent with the time frame that the pools would need to remain open to transfer all UNF to dry storage. Thus, a utility will not necessarily have to keep a pool open any longer if the approach of only shipping canistered UNF from shutdown sites is followed.

LIFECYCLE COST CONSIDERATIONS AND IMPACTS

The STAD canister deployment scenarios (see Section 4.5.2, Table 4-5) used for the logistical analysis were based on those that were used for Task Order 11[12]. Thus, the basis for evaluating the impacts of the use of STAD canisters and the characteristics of STAD canister design on life-cycle costs that are part of this feasibility study is the set of Work Breakdown Structure (WBS) elements used for the Team's previous work on Task Order 11.

The Task Order 11 CISF analysis was "waste package neutral". That is, the scope of the CISF study ended at the fence line of the CISF and did not specify the type or size of waste package. Because the use and size of STAD canisters will impact repackaging activities and shipments to the repository, additional Cost Categories or WBS Elements were added for the purposes of this present study.

Whereas the Task Order 11 analysis evaluated cost and schedule, including the costs on an annual basis, the evaluation performed for this study is limited to the life-cycle cost impacts. Therefore, the estimated life-cycle costs are total costs only (in 2012 dollars) and are not estimated on an annual basis. Table 4-16 (Section 4.5.5.4) summarizes the life-cycle cost of each of the cost categories, which vary from $19 billion to $26 billion. Section 4.5.5 provides the details on how the life cycle costs were estimated.

Major findings determined from the evaluation of the life-cycle cost impacts of the use of STAD canisters are:

1. The largest cost driver is the purchase of the STAD canisters. The total cost of the STAD canisters purchased for loading at the CISF ranges from $12 to $16 billion, depending on the STAD canister size selected. Purchase costs of the final waste packages were not included in the Task Order 11 cost estimate so a direct comparison is not available. STAD canister costs now comprise ~50-60% of the life-cycle costs included in this STAD canister feasibility study.
2. The next largest cost driver is the cost of the storage casks at the CISF. The cost of manufacturing these storage casks at the CISF has increased significantly from the Task Order 11 cost estimate, primarily as the result of using a repository opening date of 2048, as defined in the DOE Strategy, and therefore having to store UNF for a longer time and needing more storage casks as a result.
3. The lowest life-cycle cost "Cask Acceptance" parameter across each operations acceptance parameter is "STAD canisters loaded at reactors", then "DPCs/TSCs" (after adding in the cost of the STAD canisters that had been assigned to the reactor). This is primarily driven by the lower cost of repackaging operations since the UNF arriving in STAD canisters at the CISF will not have to be repackaged. The cost difference for 24 PWR/68 BWR STAD canisters is $719 M, for 21 PWR/44 BWR STAD canisters is $258 M, and for 12 PWR/32 BWR STAD canisters is $800 M. For the 4 PWR/9 BWR STAD canisters, the "STAD canisters loaded at reactors" cost is actually $143 M higher than the "DPCs/TSCs" case, principally due to the cost of storing the smaller STAD canisters.

[12] Advisory and Assistance Contract, Task Order 11, Final Report, *Development of Consolidated Storage Facility Design Concepts*, Energy*Solutions*, NAC International, Sargent & Lundy, TerranearPMC, Booz Allen Hamilton, Talisman International, Exelon Nuclear Partners, February, 2013.

4. The lowest life-cycle cost "STAD Size" parameter is the 24 PWR/68 BWR STAD canisters, while the 4 PWR/9 BWR STAD canisters are the most expensive. The life-cycle cost of using 12 PWR/32 BWR STAD canisters is only slightly higher than the 24 PWR/68 BWR STAD canisters.
5. The Office of Nuclear Energy has recently stated that cost considerations should include those costs paid for from the Judgment Fund, which includes the cost of UNF storage casks at each reactor's ISFSI. Our modeling estimates the number of DPCs and TSCs that will be loaded (and eventually unloaded and disposed) with UNF for each of the 17 scenarios. The "accept bare UNF from shutdown and operating reactors" scenarios result in the fewest total DPCs/TSCs (~3,300) while the "all DPCs/TSCs" scenarios result in the largest number (~10,300). The "additional" cost to purchase DPCs/TSCs (above the minimum of ~3,300) ranges from $1.4 to $5.6 Billion.

TOTAL SYSTEM GAP IDENTIFICATION

The impetus for gap identification emanated from a Task Order 12 workshop presentation addressing the impact of reflooding in licensed cask storage systems and that of increased burnup on fuel storage and transportation, together with subsequent waste management operations. NRC regulations and regulatory guidance, technical reports by domestic and international entities and cask and utility vendor final safety analysis reports were examined, which identified a thread of system-wide gaps. Consequently, the Team determined that performing total system gap identification was necessary to support the Task Order 12 work.

The methodology used for the gap analysis is described in Section 4.6, and the results from the gap identification are provided in Appendix E.

We recommend that the already existing gaps identified should be assessed, evaluated for technical and operational risk, and prioritized for gap closure based on significance of resolution, as well as in terms of a "do-nothing" scenario, with overall impact to the total spent fuel disposal system. Furthermore, we believe that the DOE could expand on the work included within our identification of new non-technical gaps, and perform a specific total system gap identification study to identify any new procedural, regulatory, equipment, hardware, process, or miscellaneous related gaps. These should then be assessed, evaluated, and prioritized as with the already existing gaps discussed previously.

RESEARCH AND DEVELOPMENT TO SUPPORT CONCEPTS

It is recognized that the National Laboratories are actively working on disposal concepts and thermal load management analysis for a geologic repository, in addition to evaluating the direct disposal of DPCs; the outcome of which will influence the future STAD canister sizing, configuration and deployment of a future STAD canister system.

During the course of this feasibility study, the Team identified the following additional Research and Development (R&D) opportunities associated with the total spent fuel management system, which are described in detail in Section 5.0:

1. Standardized Transportation Casks;
2. Standardized Auxiliary Equipment for Dry Storage Systems;
3. Repository Characteristics:

   a. Conceptual designs of passive engineered heat dissipation systems for a repository,
   b. Development of a list of general probable repository geology characteristics to assist in licensing and design of the three STAD canister types, and
   c. Clarify the impact of waste package emplacement heat limits on logistics analysis for various repository scenarios to influence more accurate cost analysis of transportation costs.
4. DPC Disposal and STAD Canister Design:
   a. Investigation of DPC carcass disposal and options for minimizing disposal costs
   b. Research opportunities for disposal of other wastes (GTCC and secondary) generated from the total UNF system using space in between multi-STAD canister cask systems
   c. Identify disposal mechanisms for South Texas Project and AP1000 UNF.
5. Utility Interface:
   a. Perform a survey of all utilities to determine 1) which would prefer to store on site until shutdown vs. shipping offsite during operations, or 2) which would prefer to ship bare UNF to the CISF for packaging;
   b. Investigate incentives to offer utilities, standard contract amendments necessary to support onsite storage, bare UNF shipment or onsite STAD loading scenarios;
   c. Audit and verify crane capacity and design of all U.S. operating nuclear plants to determine feasibility of loading medium, large, or multi STAD canister configurations.

CONCLUSION AND RECOMMENDATIONS

In conclusion, the Energy*Solutions* team was tasked with providing DOE with technical ideas and recommendations, supported by evaluations/analyses, on approaches to better integrate STAD canister concepts into the waste management system.

Per the SOW, key items to be addressed regarding the feasibility of the STAD canister concepts and how this report has addressed them are, as follows:

- *What standardized canister concept, if any, is most feasible to be pursued?*

  The main recommendation is to not standardize on one STAD canister size at this time, but instead, until the repository is selected, maintain a multi-STAD canister approach comprising of a small (4 PWR or 9 BWR), medium (12 PWR or 32 BWR) and large (24 PWR or 68 BWR) configuration.

  Adopting an approach where the required STAD canister (or canisters) and the repackaging facilities are not designed, fabricated or constructed until the repository site is selected will spread out the capital costs for construction of major facilities at the CISF over a much longer time frame. The downside of this approach is that utilities will continue loading UNF headed for dry storage into large DPC dry storage canisters for a much longer period. Due to the heat load associated with their large storage capacity and the nature of their criticality controls, large DPCs are not likely candidates for direct disposal (although we recognize the ongoing studies on this). Each of these expensive canisters purchased represents a large sunk

cost that likely will not contribute to the permanent disposition of the waste and adds to the low level radioactive waste disposal burden.

- *If and when to transition to using standardized canisters, and where to deploy them within the spent fuel management system*

  It is recommended that utilities that are operating nuclear reactors should not be mandated to package their UNF into small or medium size STAD canisters. Requiring them to do so could negatively impact their power generation activities by diverting resources from reactor operations, and placing increased demands on their spent fuel storage pool. However, once an operating site is shutdown, the site operator will have flexibility for loading UNF from the spent fuel pool into STAD canisters, or shipping bare UNF in casks for packaging at the CISF or repository. Although not required, some utilities may choose to load STADs, or bare fuel transportation casks while still operating, and they should be supported. The goal of minimizing impacts on operating utilities may not always be in conflict with the goal of minimizing the number of non-disposable storage canisters that are loaded.

- *What should be done with fuel already stored in non-standardized canisters?*

  The National Laboratories are investigating the direct disposal of DPCs. Preliminary analysis performed by the Team during the course of this feasibility study determined that potentially, and recognizing that disposal overpacks would most likely be required, up to 30% of existing DPCs could be disposed of in a geologic repository based only on heat load generated (Note. DPCs contain aluminum materials which were not acceptable for disposal at Yucca Mountain). The alternate options for repackaging the UNF from non-standardized canisters to STAD canisters are either to perform the repackaging in the CISF pool or, when a site is shutdown, to utilize the utility pool to perform repackaging before their pool is shutdown. Bringing DPCs to the CISF, which will be designed and licensed to perform repackaging operations is the recommended option and avoids potential issues with performing repackaging operations in existing facilities that were not designed to perform these types of operation.

From a practical perspective, the study concludes that requiring operating utilities to package UNF into small or medium STAD canisters will impact their operations both from a standpoint of human resources, ALARA, operational risks and the demands on their spent fuel pools. However, as described above, an innovative solution would be to wait until sites are shutdown and their reactors permanently retired before utilizing the utilities human and equipment resources to load smaller STAD canisters.

It is acknowledged that some operating utilities may want to package UNF into smaller STAD canisters or even ship it to the CISF using bare UNF transport casks and these instances will need to be accounted for in a pick-up order that is focused around shutdown sites. Certainly, this Team has not polled every single reactor operator in the USA to determine if they would or would not be amenable to the use of small or medium STAD canisters. However, the input from Exelon and Sargent & Lundy (services over 100 domestic reactors) and the experience of NAC International as a major supplier of dry storage and transport systems in the USA, indicates that operating sites favor large capacity DPCs, which leads to the conclusion that requiring them to use smaller capacity canisters will impact their power producing operations. Once power producing operations cease, our input suggests many utilities may be interested and able to

commit their time and resources for packaging bare UNF from pools into STAD canisters and the option should be given serious consideration.

Other key recommendations concluded from this study are:

i. In order to address licensing requirements for the CISF, it is recommended that DOE consider a series of meetings with the NRC to explore what can be done under current 10 CFR 72 licensing. The NRC is already discussing licensing needs for a combination of future storage, transportation and disposal needs. A new working group on these issues may be a good approach.

ii. In order to progress STAD canister development, it is recommended that DOE could submit topical reports on an integrated approach to meeting disposal requirements for the selected STAD canister size. These topical reports would help map the process for adding disposability to the canister licenses as part of the overall repository engineered barrier system. Interactions with the NRC over those topical reports would be beneficial for both the canister disposal licensing and development of the repository engineered barrier system.

iii. From the Total System Gap Identification work, it is recommended that, in addition to previous work on technical gaps, further work be performed to identify, assess, evaluate, and prioritize non-technical gaps and the effect that they will have on the total spent fuel disposal system.

iv. It is recommended that the DOE consider the Cost Optimized STAD canister development approach. This approach offers an accelerated shift to storage technologies that directly support disposal. This accelerated move to a storage solution that is integrated with final disposition of the waste significantly reduces life cycle costs.

For reference, a cross-reference between the contents of this report and the Task Order 12 SOW is provided in Appendix C.

CONTENTS

Acronyms 27

1 Introduction 29

2 Purpose and Scope 31

3 Systems Engineering Approach 35

3.1 Step 1 35

3.2 Step 2 35

3.3 Step 3 38

3.4 Step 4 45

4 STAD Canister System Concepts and System Analysis 47

4.1 STAD Canister System Concepts 47

4.1.1 STAD Canister Concept Descriptions 47

4.1.1.1 Small STAD Canister Systems 52

4.1.1.2 Medium Sized STAD Canister Systems 56

4.1.1.3 Large STAD Canister Systems 57

4.1.2 STAD Canister Concept Design Approach 57

4.1.2.1 Criticality Analyses 58

4.1.2.1.1 PWR Assembly Analysis: 58

4.1.2.1.1.1 Four PWR STAD Canister Criticality Analysis: 60

4.1.2.1.1.2 Twelve PWR and Twenty-Four PWR STAD Canister Criticality Analyses: 61

4.1.2.1.2 BWR Assembly Analyses 62

4.1.2.1.2.1 Nine BWR STAD Canister Analysis: 62

4.1.2.1.2.2 Thirty-Two BWR and Sixty-Eight BWR STAD Canister Analyses: 63

4.1.2.1.3 Criticality Treatment of Damaged Fuel 63

4.1.2.2 Structural Evaluation 64

4.1.2.3 Shielding Evaluation 65

4.1.2.4 Thermal Evaluation 66

4.2 Regulatory and Contract Compliance 67

4.3 Level of Effort Needed for Detailed Design Leading to a Viable License Application 73

4.3.1 Storage and Transport Licensing 74

4.3.2 Additional CISF and Repository Licensing Considerations 75

4.4 Timeline for STAD Canister Development through Repository Operations 75

4.5 STAD Canister System Scenarios and Life Cycle Cost Analysis 87

4.5.1 Total System Model 88

4.5.2 Scenarios Analyzed 89

4.5.2.1 Key Assumptions 89

4.5.2.2 TSM Scenarios 94

4.5.3 Overall System Impacts 95

4.5.3.1 Utility Impacts 95

4.5.3.2 Cost Considerations 99

4.5.3.3 CISF Impacts 108

4.5.3.4 Repository Impacts 113

4.5.3.5 Impact of Repository Emplacement Heat Limits 113

4.5.4 Advantages and Disadvantages Identified from TSM Analyses 115

4.5.5 Life Cycle Cost Considerations and Impacts 115

4.5.5.1 Task Order 11 Cost Categories not Impacted 117

4.5.5.2 Task Order 11 Cost Categories/WBS Elements Impacted by Use of/Size of STAD Canister 117

4.5.5.3 New Cost Categories/WBS Elements for STAD Canister Feasibility Study 119

4.5.5.4 Life Cycle Costs for the Seventeen STAD Canister Scenarios 121

4.5.5.5 Cost of Purchasing DPCs and TSCs for Storage of UNF at Reactor Sites 125

4.5.5.6 Major Findings 126

4.6 Total System Gap Identification 127

4.6.1 Gap Identification Process 127

4.6.2 Total System Gap Identification Methodology 127

4.6.3 Existing Gaps Already Identified 128

4.6.4 New Gaps Identified 129

4.6.5 Conclusions and Recommendations 129

5 Research and Development to Support Concepts 130

6. Conclusions 131

7 Recommendations 141

8. References 143

Appendices 146

TABLES

Table 4-1. STAD Canister Design Characteristics 50
Table 4-2. Estimated Relative Levels of Effort for Design and Licensing STAD Canister System Components 74
Table 4-3. Task 12 Transportation Casks 91
Table 4-4. Task 12 PISF Acceptance Rates 93
Table 4-5. TSM Scenarios 95
Table 4-6. Summary of Acceptance from Reactors 96
Table 4-7. Estimated Worker Radiation Doses – Reactor Cask Loading Operations 98
Table 4-8. Transportation Operations Costs, Shipments to PISF/CISF (M 2012$) 101
Table 4-9. Transportation Operations Costs, Shipment From CISF to Repository (M 2012$) 105
Table 4-10. Cask Fleet Requirements, Shipment to PISF/CISF 106
Table 4-11. Estimated Cask Fleet for Shipments from CISF to Repository 106
Table 4-12. Estimated Worker and Public Radiation Exposure (Person-Rem) – Transportation from Reactors to CISF 107
Table 4-13. Estimated Worker and Public Radiation Exposure (Person-Rem) – Transportation from CISF to Repository 108
Table 4-14. Summary of CISF Throughputs 112
Table 4-15. Work Breakdown Structure/Cost Categories used for Task Order 11 116
Table 4-16. Summary of Life Cycle Costs for the Seventeen STAD Canister Scenarios analyzed using the Total System Model (Cost in 2012 $M) 123

FIGURES

Figure 3-1. Logic Diagram Showing Systems Engineering Approach 35
Figure 4-1. STAD Canister System Concepts 49
Figure 4-2. Small STAD Canister Transportation Multi-Canister Configuration Concept 53
Figure 4-3. STAD Canister Storage Overpack Concepts 55
Figure 4-4. US Spent PWR Fuel Inventory and Cask Fuel Acceptance (Figure 10 from Report ORNL/LTR-2012/448, dated September 28, 2012) 59
Figure 4-5. Major Milestones from the DOE Strategic Response to the BRC Recommendations 76
Figure 4-6. Baseline Case STAD Canister Development Schedule with UNF Repackaging Timeline 77
Figure 4-7. Baseline Case STAD Canister Development Schedule with Additional Milestones Tied to Assumptions Added 79

Figure 4-8. The Results of Continuing with the Current Process for Storing UNF at Utilities 80
Figure 4-9. Waste Management Network Diagram and Identification of Schedule Float 82
Figure 4-10. The Potential Hardware Cost Savings just from Accelerating the Change from DPCs to STAD Canisters 83
Figure 4-11. Dry Storage for HLW Canisters at West Valley 85
Figure 4-12. Cost Optimized STAD Canister Development Schedule with Additional Milestones tied to Assumptions Added 86
Figure 4-13. Comparison of Key Milestones in the Baseline and Cost Optimized STAD Canister Development Schedules 87
Figure 4-14. UNF Acceptance Profiles, Metric Tons per Year 100
Figure 4-15. UNF Acceptance Rates, Casks per Year 100
Figure 4-16. UNF Storage at the CISF for Scenarios 1-3 and 17 (Metric Tons) 109
Figure 4-17. Scenario 4 CISF Cask Storage 110
Figure 4-18. Scenario 6 CISF Cask Storage 110
Figure 4-19. Scenario 1 CISF Cask Storage 111
Figure 4-20. Scenario 6 CISF Cask Storage, 3,000 MT/yr Repackaging Facility Limit 112
Figure 4-21. Shipment Rate to Repository, 21/44 STAD canisters, 8 kW Emplacement Limit 114
Figure 4-22. CISF Casks in Aging, 21/44 STAD canisters, 8,000 W Emplacement Limit 114
Figure 4-23. CISF Operations Cost Responsibility 122
Figure 4-24. Summary of Scenario Costs 125

Acronyms

AAR	Association of American Railroads
A&AS	Advisory and Assistance Service
ABWR	Advanced Boiling Water Reactor
ALARA	As Low As Reasonably Achievable
BRC	Blue Ribbon Commission
BUC	Burn Up Credit
BWR	Boiling Water Reactor
CE	Combustion Engineering
CISF	Consolidated Interim Storage Facility
CFR	Code of Federal Regulation
COC	Certificate of Compliance
CRWMS	Civilian Radioactive Waste Management System
D&D	Decontamination and Decommissioning
DOE	Department of Energy
DOT	Department of Transport
DPC	Dual Purpose Canister
EIS	Environmental Impact Statement
EPA	Environmental Protection Agency
EPRI	Electric Power Research Institute
FEA	Finite Element Analysis
FMEA	Failure Modes Effects Analysis
GDC	General Design Criteria
GE	General Electric
GTCC	Greater Than Class C
GWd/MTU	Gigawatt-days/Metric Ton of Uranium
HAC	Hypothetical Accident Condition
HBU	High Burn-up
HLW	High-level Waste
IAEA	International Atomic Energy Authority
ISFSI	Independent Spent Fuel Storage Installation
ISG	Interim Staff Guidance document
kW	Kilo Watt
Keff	Effective Neutron Multiplication Factor
LLW	Low-Level Waste
MCNP	Monte Carlo N-Particle
MOU	Memorandum of Understanding
MOX	Mixed Oxide
MPC	Multi-Purpose Canister
MT	Metric Ton
MWd/MTU	Megawatt-days/Metric Ton of Uranium
MTHM	Metric Ton of Heavy Metal
MTU	Metric Ton of Uranium
NEPA	National Environmental Policy Act
NRC	U.S. Nuclear Regulatory Commission

NUREG	NRC Regulation Technical Report
NWPA	Nuclear Waste Policy Act
NWTRB	Nuclear Waste Technical Review Board
OFA	Optimized Fuel Assembly
OFF	Oldest Fuel First
ORNL	Oak Ridge National Laboratory
PFS	Private Fuel Storage
PISF	Pilot Interim Storage Facility
PWR	Pressurized Water Reactor
R&D	Research and Development
RCCA	Reactor Control Cluster Assemblies
SAR	Safety Analysis Report
SC	Storage Cask
SNF	Spent Nuclear Fuel (used interchangeably in this document with UNF)
SOW	Statement of Work
SSC	System, Structure and Component
STAD	Standardized, Transportation, Aging and Disposal
TAD	Transportation, Aging and Disposal
TC	Transportation Cask
TR	Topical Reports
TSC	Transportable Storage Cask
TSM	Total System Model
TSMPP	Total System Model Preprocessor
UFD	Used Fuel Disposition
UNF	Used Nuclear Fuel (used interchangeably in this document with SNF)
WBS	Work Breakdown Structure
WHF	Waste Handling Facility
W/m-k	Watts per meter kelvin
WHF	Wet Handling Facility
YMP	Yucca Mountain Project

1 Introduction

On September 20, 2012, under the United States Department of Energy (DOE) Advisory and Assistance Service (A&AS) contract, an integrated team headed by Energy*Solutions* was one of two teams that were awarded Task Order 12: Assist the DOE Office of Used Nuclear Fuel Disposition (UFD) in implementing a study for the feasibility of development and licensing of Standardized Transportation, Aging, and Disposal (STAD) canisters and casks.

Historically, Used Nuclear Fuel (UNF) storage at the utility sites was wet, based on initial experience with the weapons program, and as all UNF was expected to be recycled, no long term storage was envisioned. With the announcement in 1977 by the Carter Administration that the United States would defer indefinitely the reprocessing of spent nuclear fuel, the focus switched to long term storage in an underground nuclear waste repository. This was codified by the enactment of the Nuclear Waste Policy Act (NWPA) in 1982. The NWPA created a timetable and procedure for establishing a permanent, underground repository for high-level radioactive waste by the mid-1990s. It also required the Nuclear Regulatory Commission (NRC) to develop generic licensing requirements for dry storage, which paved the way for a set of defined requirements for storage, transport and disposal. In conjunction with the NWPA, the "Standard Contract for Disposal of Spent Nuclear Fuel and/or High Level Radioactive Waste", 10 CFR 961, was established between the federal government and the utilities, which included the contractual obligation for the federal government to begin accepting UNF by 1998. In December 1987, the NWPA was amended to designate Yucca Mountain, Nevada as the only site to be characterized as a permanent repository for all of the nation's nuclear waste. In 2010, the DOE discontinued the Yucca Mountain Project and eliminated any request for funding, except that needed to end the Yucca Mountain project in an orderly fashion and to answer inquiries from the NRC.

As a consequence of the delays in the repository program, the utilities undertook programs to expand the capacity of existing spent fuel pools, because the marginal cost of such expanded capacity was cheaper than going to any alternative storage arrangement, such as dry casks. When it became clear that even higher capacity pool storage would not meet the storage requirements without building new, or larger pools, dry storage became the best alternative. Absent disposal criteria, or any contractual driver for unifying canister designs, the dry storage of UNF in canister based systems, e.g. Dual Purpose Canister (DPC), storage only canister, etc., was developed around the needs of operating utilities and thermal and criticality management practices, which would be acceptable to the licensing authorities for storage, and where appropriate, for transportation. As a consequence, existing dry storage systems were not designed to meet any specific disposal criteria. The utilities are currently using large dry storage systems with canister capacities up to 37 Pressurized Water Reactor (PWR) or 89 Boiling Water Reactor (BWR) fuel assemblies. The installed base of dry storage systems includes both single-purpose (storage only) and dual-purpose (storage and transportation) storage systems. All of the new generation of dry storage systems are dual-purpose.

Subsequent to the DOE dismantlement of the Yucca Mountain Program, the Blue Ribbon Commission (BRC) on America's Nuclear Future was chartered to recommend a new strategy for managing the back end of the nuclear fuel cycle. In January 2012, the BRC issued a report "Blue Ribbon Commission on America's Nuclear Future", Report to the Secretary of Energy,

which consisted of eight key recommendations, one of which is associated with the work scope requested under Task Order 12:

- Prompt efforts to develop one or more geologic disposal facilities

  "Deep geologic disposal capacity is an essential component of a comprehensive nuclear waste management system for the simple reason that very long-term isolation from the environment is the only responsible way to manage nuclear materials with a low probability of re-use, including defense and commercial reprocessing wastes and many forms of spent fuel currently in government hands. The conclusion that disposal is needed and that deep geologic disposal is the scientifically preferred approach has been reached by every expert panel that has looked at the issue and by every other country that is pursuing a nuclear waste management program."

In response to the BRC report, the DOE issued in January 2013 the "Strategy for the Management and Disposal of Used Nuclear Fuel and High-Level Radioactive Waste". For geologic disposal, the Administration's goal is to have a repository sited by 2026; the site characterized, and the repository designed and licensed by 2042; and the repository constructed and its operations started by 2048. The DOE strategy document advises that in Fiscal Year 2013, the Department is undertaking disposal-related Research and Development (R&D) work, including: an evaluation of whether direct disposal of existing dry storage containers used at utility sites can be accomplished in various geologic media, and evaluating thermal management options for various geologic media.

Recent work on disposal concepts and thermal management options is captured in "Repository Reference Disposal Concepts and Thermal Load Management Analysis", FCRD-UFD-2012-00219, Rev.2., which indicates that the waste package size for Crystalline (enclosed[13]) and Clay/Shale (enclosed) concepts is equivalent to one waste package holding 4 PWR assemblies (popular internationally), and that larger packages (12 PWR+) could be used but would require significantly increased decay storage, prior to repository emplacement, to meet target temperatures. For Salt concepts, which can tolerate a higher host rock and buffer materials temperature (200°C versus 100°C) than their Crystalline or Clay/Shale equivalents, 12 PWR packages could be emplaced after approximately 50 years decay storage. In addition, the analysis suggests that for salt concepts, packages larger than 12-PWR can be emplaced after fewer than 100 years decay storage. Finally, the report provides insights into much higher heat loads that could be sustained by open repository configurations. Presumably these would be in the unsaturated zone in an oxidizing environment with either forced, or natural circulation cooling after the waste is emplaced. Analyses of the thermal impacts resulting from disposal of larger canisters containing 21 and 32 PWR assemblies was also covered in this report.

In view of the above, the drivers for Task Order 12 were to develop and evaluate concepts for STAD canisters, which can (1) be accommodated within the reference disposal concepts, (2) will be acceptable to the operating utilities, (3) will meet the requirements of the NRC Regulations 10 CFR 71 - Packaging and Transportation of Radioactive Material, and 10 CFR 72 - Licensing

[13] FCRD-UFD-2012-00219, Rev.2, considers two major categories for waste package emplacement modes: "open" where extended ventilation can remove heat for many years following waste emplacement underground; and "enclosed" modes for clay/shale and salt media. For the enclosed modes, waste packages are emplaced in direct or close contact with natural or engineered materials which may have temperature limits. Enclosed modes include backfilled alcoves, vertical and horizontal borehole emplacement in borings constructed from underground, and deep boreholes drilled from the surface.

Requirements for the Independent Storage of Spent Nuclear Fuel, High Level Radioactive Waste, and Reactor-Related Greater than Class C Waste, (4) allow the DOE to implement its strategy for the management and disposal of UNF and high-level radioactive waste , and (5) in the absence of federal regulations for an identified repository (10 CFR 63 is only applicable to Yucca Mountain), are capable of satisfying the anticipated licensing requirements for such a future repository.

The Energy*Solutions* team assembled for this task consists of the following members:

- Energy*Solutions* - Full nuclear fuel cycle company with interests in Federal and commercial nuclear waste treatment, clean-up and disposition, nuclear reactor and legacy facility decommissioning, UNF treatment, storage and disposition, and UNF recycling.
- NAC International - Specialties include nuclear materials transport, and spent fuel storage and transport technologies. NAC has provided transportable UNF storage canisters and casks for a significant proportion of the commercial nuclear reactor utilities in the U.S.
- Exelon Nuclear Partners - A business unit of Exelon Generation. Operates 17 nuclear units and two retired units, with 8 Independent Spent Fuel Storage Installations (ISFSIs) at both BWR and PWR sites. Maintains over 10,000 Metric Tons Uranium (MTU) of UNF in pool storage and has moved over 2,200 MTU of UNF into nearly 212 dry cask systems.
- Sargent & Lundy - A full service architect-engineering company (founded 1891) that has provided nuclear engineering and design services since the 1940s. Designed 32 nuclear units (incl. PWR and BWR) and currently serves 101 operating units in the US and 9 in Canada.
- Talisman International - A consulting company specializing in nuclear regulatory issues, covering safety and security of nuclear facilities, regulation and classification of nuclear facilities and the wastes they produce. Talisman has a number of former senior NRC managers on its staff.
- TerranearPMC - A Small Business Administration 8(a) company which provides environmental remediation, environmental compliance and radiological waste management services for a diverse set of federal clients in the nuclear field.
- Booz Allen Hamilton - A technology and strategy consulting company with extensive experience in performing economic analysis and risk management assessments, and developing strategic plans and business models for nuclear industry vendors and utilities.

2 Purpose and Scope

The purpose of this report is to document the concepts, feasibility, advantages, disadvantages and recommendations for STAD canister systems, and the integration of such concepts into the waste management system, developed by Energy*Solutions* and its team partners: NAC International, Talisman International, Booz Allen Hamilton, TerranearPMC, Exelon Nuclear Partners and Sargent and Lundy, hereafter referred to as “the Team”.

The Task 12 Statement of Work (SOW) provided by the DOE identified the following general requirements:

- The DOE is seeking technical ideas and recommendations, supported by evaluations/analyses, on approaches to better integrate storage (standardized canister concepts) into the waste management system. For example, things we would like evaluated include, but are not limited to: how can we standardize given the current situation described in the SOW, especially with respect to disposal unknowns; should we carry different standardized canister sizes forward depending on disposal unknowns; are there only certain elements of the total waste management system where standardization is feasible; thermal limits have been set, but are they really an issue, etc..
- This work will require coordination with and input from work that is being conducted by the UFD Campaign National Laboratories and Industry Support Contractors regarding the Systems Architecture work, ongoing generic geologic disposal evaluations, and Consolidated Storage Facility Design Concepts (Task Order 11). It will also require input from the nuclear utility industry and cask vendor community.
- It is important that any STAD canister be consistent with the nuclear industry's high level of plant operability. In addition to the physical constraints below, functional analyses should include evaluation of utility operational throughput needs associated with managing their spent fuel pools to maintain plant operations. The management, planning, loading, and transfer of UNF from pools to dry storage systems can be a complex process and involve the use of plant resources (both human and equipment) that have other competing demands on their time as well as dose considerations. These competing demands can impact the canister loading throughput. In order to facilitate utility acceptance of STAD canisters, impacts on utility resources and ability to produce power must be minimized and eliminated where possible.
- Applicable laws, rules, directives, and standards with which the project must comply will be identified. Specific items for consideration will include but are not limited to:
    - Licensing Requirements for the Independent Storage of Spent Fuel, High Level Radioactive Waste, and Reactor Related Greater than Class C Waste
        - 10 CFR 72
    - Storage Handling Requirements
        - At reactor
        - At Independent Spent Fuel Storage Installation
        - At repository
    - Transportation Requirements
        - 10 CFR 71
    - Transportation Handling Requirements
    - Repository Issues
        - 10 CFR 60 and 63
    - New EPA Generic Standard for Repository Performance

- The contractor shall provide technical services to support the DOE Office of Nuclear Energy UFD Campaign. The technical services includes technical ideas and recommendations supported by analysis and evaluation that are provided in a report format necessary to support a future DOE decision regarding the development and licensing of a standardized canister system.

- The Contractor will develop a STAD Canister System Feasibility Draft Report (see below). Things that should at a minimum be considered in development of this report include:
    - Ongoing UFD Campaign work related to Systems Architecture (including draft Concept of Operations), Generic Geologic Disposal Evaluations, and Consolidated Storage Facility Design Concept;
    - Identification and consideration of site-specific limitations that may impact the various STAD canister related storage and transportation options at each nuclear utility;
    - Utility canister and loading campaign approaches and strategies;
    - Assessment of STAD canister impacts on the total waste management system for scenarios that include consolidated interim storage facilities;
    - Regulatory requirements (including assumed disposal requirements);
    - Development of assumed goals, objectives, and functional requirements of a STAD system.
- STAD Canister System Feasibility Draft Report shall, as a minimum, identify:
    - Identification of STAD canister system scenarios considered (including canister sizes);
    - Overall impacts (including advantages and disadvantages) of each scenario;
    - Specific advantages and disadvantages of switching to a potentially smaller standardized canister (e.g., cost, time, dose, transportation, etc.) including how these advantages and disadvantages change with time of implementation;
    - Proposed innovative solutions, if any, to addressing disadvantages and an assessment of canister size limitations versus level of difficulty to overcome disadvantages/challenges;
    - Feasibility/trade studies to address the following:
        - If and when to transition to using standardized canisters,
        - Where to deploy them within the spent fuel management system,
        - What standardized canister concept, if any, is most feasible to be pursued,
        - What should be done with fuel already stored in non-standardized canisters?
    - Recommended path forward regarding standardization with supporting rationale as well as identification of areas for additional research.

To meet the requirements of Task 12, the Team followed a five-step[14] approach, in order to develop and evaluate alternatives for a STAD canister system for UNF, and recommend a path forward for standardization. The five steps are:

[14] In this report, the terms “Step” and “Phase” have been used interchangeably.

- Step 1 – Review existing information, define functional requirements and establish a technical framework, including goals and objectives for the rest of the study.
- Step 2 – Brainstorm and down-select to a shortlist of options, ideas and recommendations for STAD canister systems to address with additional scrutiny in Step 3.
- Step 3 – Development of the selected STAD canister systems in order to determine which ones are viable for further analysis and which ones can be omitted from further review as impracticable.
- Step 4 – Assessment of system-wide impacts of deploying each of the selected options. Identification of research and development requirements necessary to bring these options to a commercially ready state, and/or the level of effort needed for detailed design leading to a viable license application.
- Step 5 – Assessment of how, where, and when the selected STAD canister systems could be deployed, and the concept of operations for a UNF Disposition system that transitions some, or all of the UNF stored in canisters not designed for disposal into storage in STAD canisters.

This report documents the output from this approach, and is structured as follows:

- **Section 3.0, Systems Engineering Approach**, outlines the process used to complete the STAD canister feasibility study.
- **Section 4.0, STAD Canister System Concepts and System Analysis,** describes the STAD canister concepts developed from this study, timeline for STAD canister development through to repository operations, and the results and conclusions (including innovative solutions to overcome disadvantages associated with smaller STAD canisters) from the logistical analysis/trade Studies using the Total System Model (TSM). This section also discusses the regulatory and contract compliance issues associated with repackaging activities, presents the results and recommendations from a total system gap identification exercise, and details the level of effort needed for detailed design leading to a viable licensing application; providing both a description of the design calculations and drawings required for 10 CFR 71, 10 CFR 72 and 10 CFR 63 (surrogate for repository), and an estimate of the level of effort to perform the work.
- **Section 5.0, Research and Development to Support Concepts**, outlines areas that should be developed further in support of the STAD canister concepts.
- **Section 6.0, Conclusions,** provides the key findings from the study.
- **Section 7.0, Recommendations**, includes recommendations on the path forward for standardization using a multi STAD canister approach, recommendations for the regulatory and licensing path forward and outlines areas that should be developed further in support of the STAD canister concepts.

For reference, a cross-reference between the contents of this report and the requirements of the SOW is provided in Appendix C.

3 Systems Engineering Approach

As outlined in the Technical Proposal submitted to DOE on September 4, 2012, the intent was to follow a five-step approach, in order to perform the scope of work for the STAD canister feasibility study. In reality, the work was effectively completed in the four steps described below, with steps 4 and 5 completed in parallel, rather than in series. Figure 3-1 shows a logic diagram of the systems engineering approach used by the Team.

Figure 3-1. Logic Diagram Showing Systems Engineering Approach

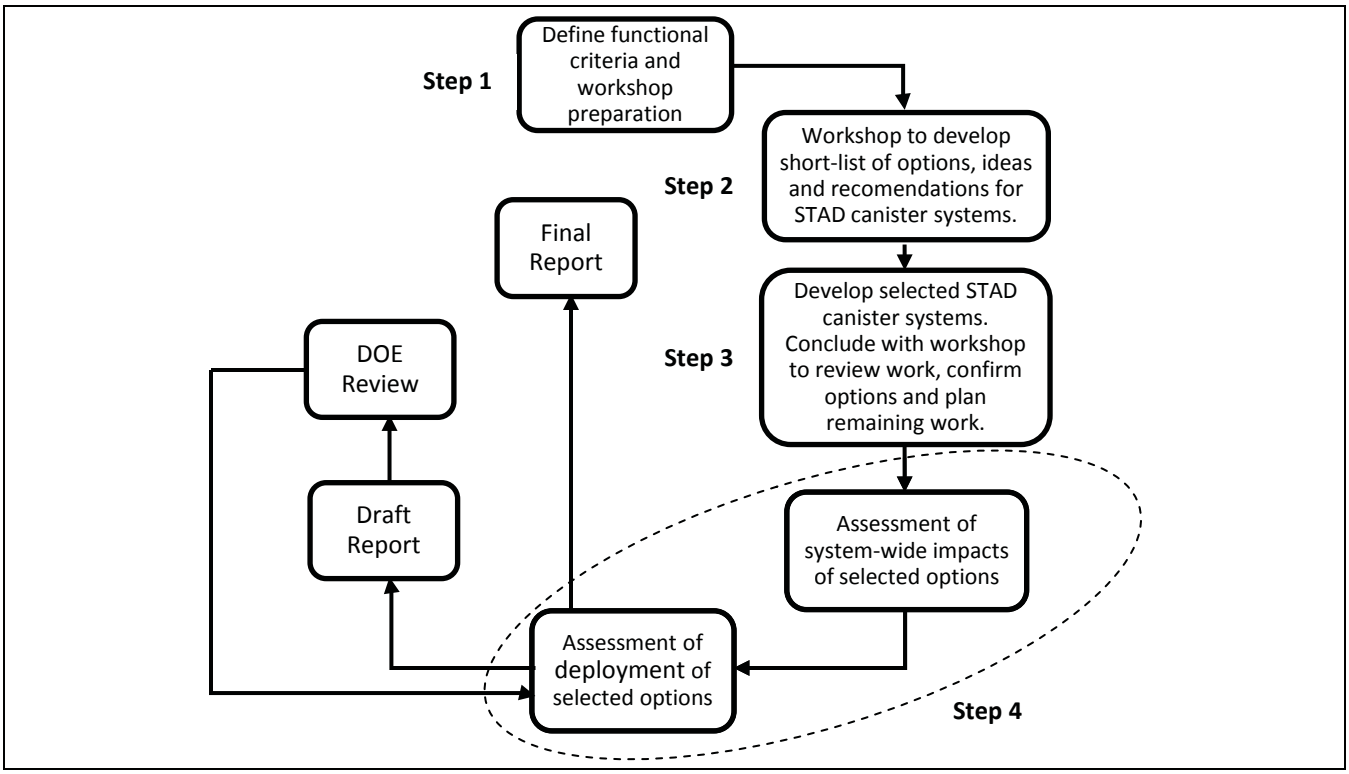

3.1 Step 1

Subsequent to the award of Task Order 12 on September 21, 2012, and during a period of time called "Phase 1", the Team prepared for the "Phase 2" workshop (see Section 3.2) by gathering, researching and developing information pertinent to the SOW. The purpose of this exercise was to share the information amongst the Team, via presentations and technical discussion, during the workshop. The topics covered and key points from the presentations are described in Appendix A. Objective statements for both the workshop and the study were also drafted for review and acceptance at the workshop.

3.2 Step 2

Step 2 commenced upon completion of Step 1. A facilitated workshop was held from October 30th to November 1st, 2012, which was attended by representatives from each company within the Team. This workshop comprised a period of time called "Phase 2". A description of the Phase 2 workshop results is provided in Appendix A and the key outputs from the workshop are described below.

1) A technical framework was developed comprising the following functional criteria, constraints and drivers that are applicable to STAD canister development:
   a) Applicable Regulations
      - 10 CFR 71: Packaging and Transportation of Radioactive Material
      - 10 CFR 72: Licensing Requirements for the Independent Storage of Spent Nuclear Fuel, High-Level Radioactive Waste, and Reactor-Related Greater Than Class C Waste
      - 10 CFR 60: Disposal of High-Level Radioactive Wastes in Geologic Repositories
      - 10 CFR 63: Disposal of High-Level Radioactive Wastes in a Geologic Repository at Yucca Mountain (specifically applied to Yucca Mountain but, in the absence of an alternative, assume as surrogate)
      - New EPA Generic Standard for Repository Performance
   b) Fuel Specification
      - Accommodate 100% of standard commercial PWR and BWR fuel types, including intact, damaged, partial, Mixed Oxide (MOX), stainless clad, with and without inserts
      - South Texas Project, ABWR and AP1000 fuel types not included
      - Burnup: $\leq$ 70 GWd/MTU for BWR, $\leq$ 80 GWd/MTU for PWR
      - Initial Enrichment: $\leq$ 5.0 wt % ^{235}U
      - Maximum decay heat limited by requirements for storage, transportation, and disposal
   c) Yucca Mountain Transport, Aging and Disposal (TAD) Canister specification requirements considered:
      - Criticality: Neutron absorber plate material and geometry
      - Handling: Standard canister lifting interface
   d) STAD canisters loaded/unloaded in fuel pool
   e) Burn-Up Credit (BUC) criticality analysis for transportation (ISG-8 Rev. 3)
   f) 100 year storage period prior to disposal (Note. Based on the opinion of the Team)
   g) Minimize occupational radiation exposure by designing for As Low As Reasonably Achievable (ALARA).
   h) Transportation overpack to be compatible with AARS-2043 and Plate B/C requirements.
   i) STAD canister system designs to be as generic/neutral as possible with respect to disposal media
   j) Minimize or eliminate impacts on utilities to produce power
2) Options for three sizes of STAD canister, together with their characteristics, were confirmed:
   a) Small
      - 4 PWR / 9 BWR elements.
      - Ability to handle failed fuel in integral damaged fuel canisters.
      - Transportation cask capable of transporting multiple small STAD canisters.
      - Part of concept may be storage of the carrier (analogous to “test tube” rack for damaged fuel cans) at the interim storage facility. (Note. Idea is that carrier is used to support four small STAD canisters within a transportation cask and could then be

used to transfer all four canisters at the same time to a storage/aging overpack, which is designed to hold four small STAD canisters.).

- Top end shielding assumed (Note. The thick top lid provides shielding which reduces the dose rates around the canister top end where closure operations will be performed).
- Borated stainless for neutron poison.

b) Medium

- 12 PWR / 32 BWR.
- Ability to handle failed fuel in integral damaged fuel canisters.
- Most likely one medium STAD canister per transportation cask.
- Possible to store more than one medium STAD canister in a storage/aging overpack.
- Top-end shielding assumed.
- Borated stainless for neutron poison.

c) Large

- 24 PWR / 68 BWR (or could be a DPC sealed within a disposal overpack).
- Top-end shielding assumed for Large STAD canister.
- Ability to handle failed fuel in integral damaged fuel canisters.
- Significant thermal issues and repository options to be evaluated for this STAD canister option.
- For DPCs, consider looking at disposal overpack extensions as a way to distribute heat flux.
- Significant issue with criticality control for disposal with existing DPCs containing aluminum-based neutron poison materials. Borated stainless steel was the required neutron poison for the Yucca Mountain TAD canisters.
- Size and weight will be challenging with regards to canister handling and emplacement in the repository; particularly for repository designs with vertical access shafts.

The above STAD canister sizes were selected for development and evaluation after the Team brainstormed ideas that could work within the established technical framework defined in paragraph (1). As part of the brainstorming process, the Team considered the workshop technical presentations and utilized the Team's collective experience. In addition, the Team considered the likely impact on utility operations, transportation, interim storage and disposal, as well as the advantages and disadvantages of each option, implementation risks, and possible solutions to mitigate risks.

To aid the options identification process, a generic scenarios graphic was developed, which identified seventeen possible scenarios for transporting UNF from the utility site. The scenarios identified for the three STAD canister options are provided in Appendix A (mark-ups of the generic graphic). With reference to these scenarios it can be seen that the main emphasis is on limiting the impacts to the operating utilities. Thus, in order to limit these impacts at operating reactors the processes of repackaging DPCs into small or medium STAD canisters or packing bare UNF into small or medium STAD canisters should be performed at, per the DOE strategy, the Consolidated Interim Storage Facility (CISF) or repository. It should be noted that these

scenarios were revisited during a later workshop, where an alternative approach to addressing these impacts was identified. This is discussed in Section 3.3.

The main driver for the three sizes of STAD canisters was the fact that a repository site has not been selected at this time. Work performed by the National Laboratories and detailed in the report *Repository Reference Disposal Concepts and Thermal Load Management Analysis*, FCRD-UFD-2012-00219, indicates that the disposal concepts being evaluated are three open mode (Shale Unbackfilled, Sedimentary Backfilled, and Hard Rock Unsaturated) and four enclosed mode (Crystalline, Generic Salt Repository, Clay/Shale and Deep Borehole). The quantity of fuel assemblies that can be disposed of in a waste package is predominantly driven by the thermal limitations of the engineered and geological barriers and, with the exception of the deep borehole concept, which takes waste packages of a nominal single assembly size, a small STAD canister containing 4 PWR and 9 BWR assemblies is considered to be the most flexible for the rest of the disposal concepts. However, as described in Section 4.0, using small STAD canisters potentially comes at a greatly increased cost and all options for STAD canister sizes need to considered, in conjunction with evaluating the direct disposal of DPCs, which is an area that the National Laboratories are currently investigating[15].

Based on the above, the consensus of the Team at the facilitated workshop was that a single STAD canister concept could not be recommended at this time, thus justifying the decision to further develop and license the small, medium and large STAD canister designs for storage and transport. This work should be done in parallel with efforts to select a host community and its repository geology.

3.3 Step 3

Step 3 commenced upon completion of Step 2 and during this period of time, which was called "Phase 3", the work completed by the Team focused on two main areas:

1) Development of the small, medium and large STAD canister options.
2) "Phase 3" workshop, which was held from January 22nd to 24th, 2013, and was intended to review the development work, to confirm the three STAD canister options and plan remaining work.

Development of Small, Medium and Large STAD canister options

The work focused on completing several sub-tasks, which were identified during the "Phase 2" workshop. These sub-tasks were intended to develop, within the technical framework, the small, medium and large STAD canister options into design concepts. The results from these sub-tasks were then presented to the Team at the Phase 3 workshop for review and confirmation of the selected options. The sub-tasks are shown below, together with the key outputs, noting that detailed results from the Phase 3 workshop are provided in Appendix B.

Task 1

Evaluate logical mapping of small, medium and large STAD canister options to generic repository options.

[15] *Implementation Plan for the Development and Licensing of Standardized Transportation, Aging, and Disposal Canisters and the Feasibility of Direct Disposal of Dual Purpose Canisters*, Howard, R., J. Scaglione, J. Wagner, E. Hardin, and M. Nutt., 2012, FCRD-UFD-2012-000106. Oak Ridge, TN, U.S. Department of Energy.

Key Outputs

- Small canisters provide the most flexibility, but at a higher cost and operational risk.
- Thermal, corrosion and isolation (engineered barrier systems) are key factors applying at different stages of repository performance.
- There will be design and operational trade-offs based on the geology offered by a host community for the repository.
- The consequences for repository post closure intrusion, e.g. via borehole drilling, are less for small packages, i.e. consequences from breaking open a small package will be lower than a large package.

Task 2

Review history of Multi-Purpose Canisters (MPCs) and DPCs to identify any lessons learned that are applicable to the development of STAD canisters.

Key Outputs

- Preferable not to repackage at operating sites due to the cost associated with implementing a canister repackaging program and the demands on the sites human and equipment resources.
- Multiple STAD canister types/sizes may be needed based on: fuel types/characteristics; storage site locations and geology.

Task 3

Analyze *Repository Reference Disposal Concepts and Thermal Load Management Analysis* report (FCRD-UFD-2012-000219) and discuss with authors, as necessary, in order to understand thermal constraints with regards to the three sizes of STAD canister concepts.

Key Outputs

- The two major categories for waste package emplacement modes are: “open” where extended ventilation can remove heat for many years after waste emplacement underground; and “enclosed” for clay/shale, salt media, and other geologies with backfill. For the enclosed modes, waste packages are emplaced in direct contact with natural or engineered materials which may have temperature limits that constrain thermal loading. In-drift emplacement can be open or enclosed depending on whether buffer and/or backfill is installed around waste packages at emplacement. Packages may be kept in open drifts during operations, and backfill installed at closure.

- Key thermal constraints include:
  - Limit thermally induced stresses or displacements in the host rock or other units
  - Limit the migration of brine-filled fluid inclusions in salt
  - Limit physical and/or chemical changes to clay buffers used in enclosed mode disposal concepts.
  - Limit cladding temperature to 400°C for normal conditions of storage and short-term operations. Also during loading operations repeated thermal cycling (repeated heatup/cooldown cycles) may occur but should be limited to less than 10 cycles.
  - Limit cladding temperature to 350°C during permanent disposal.
  - Select host rock with strong conductive heat dissipation properties
  - Use optimal waste packages to support heat transfer regimes that stay within peak temperature limitations.

- Most enclosed-mode mined disposal concepts would use relatively small packages for UNF (4 PWR/9 BWR) to limit peak temperatures, noting that the target value for the maximum temperature of the clay buffer is assumed to be 100°C, based on previous experience and international precedent. This is not necessarily a fixed limit and using assumed thermal constraints based on past designs is a barrier to optimizing thermal load management. This is one area where R&D is needed to push the thermal limits.
- High-burnup UNF could be emplaced in smaller 4 PWR waste packages, after approximately 100 yr of surface decay storage, without the repository wall temperature exceeding the 100°C limit for most geology types.
- For salt, the superior thermal conductivity and greater tolerance to elevated temperature up to 200°C or possibly higher allows use of larger waste packages and it does not require an open emplacement mode design. However, current legislative and regulatory retrieval requirements (e.g. NWPA and 10 CFR 63) are that emplaced waste must be retrievable on a reasonable schedule starting at any time up to 50 years after waste emplacement operations are initiated, unless a different time period is approved or specified by the Commission). This may be a problem for salt repositories, i.e. potential issues with heavy packages sinking into the salt bed.
- Repository designs need not be limited to the disposal of one waste package size, and increased drift spacing in the repository lowers peak temperatures and is increasingly effective when peak temperatures occur at later times.

Task 4

Evaluate long term material compatibility with different types of repository media.

Key Outputs

- An oxidizing environment is more challenging for material selection due to the need for highly corrosion resistant waste packages.
- A reducing environment provides more flexibility for material selection because the selection of waste package material is not as critical.

Task 5

Produce designs for the STAD canister concepts.

Key Outputs

- Preliminary designs produced for small, medium and large STAD canisters (see Appendix B).
- Criticality and structural scoping analyses were performed to determine the viability of the preliminary designs (see Appendix B).
- Dimensions and weights identified for the STAD canister features, including the criticality design, i.e. Egg-Crate or Flux Trap (see Appendix B).
- Small STAD canister has the advantage that multiple small STAD canisters can be stored and shipped together.

- Large STAD canister designs have the advantage of costs for both capital procurements and for operations.

Task 6

Evaluate the feasibility of a universal transportation cask.

Key Outputs

- Identified that between them, three transportation casks (NAC International's MAGNATRAN, Transnuclear's NUHOMS MP-197 and Holtec's HISTAR-190) could handle most of the DPCs. However, there will be challenges (licensing, financial, intellectual property, etc.) with licensing transport casks to transport another vendor's canisters, and a more practical approach is for each vendor to design and license a cask that can handle all of their own DPCs, an approach that industry appears to be gravitating towards. However, there are "cats and dogs" amongst the existing DPC inventory for which it makes good sense to have one common transport cask, in addition to the vendor-specific transport casks..

Task 7

Identify advantages and disadvantages of STAD canister options for the utilities.

Key Outputs

- The utility preference is to minimize impact on plant operations, plant modifications and worker safety.
- Small STAD canisters, while compatible with any repository geology, are inefficient and will result in longer overall loading times and higher worker dose when processed in series. As an example, the whole process for filling a large STAD canister can be completed in approximately four days (utilizing all 24 hours in a day). Medium and small STAD canisters are expected to take approximately 10% and 20% less time, respectively with these minor time savings for the medium and small STAD canisters coming primarily from shorter loading times (fewer assemblies to load) and canister lid welding. All other STAD canister activities, e.g. drying, and their time durations are almost identical irrespective of the canister size. The worker dose uptake per canister filled is almost identical irrespective of canister size. Because the use of small or medium STAD canisters will require more to be filled per given amount of UNF, the use of these STAD canister sizes will therefore increase overall packaging time and worker dose uptake in comparison with the larger STAD canisters.
- Need to explore options for welding 4 small STAD canisters in parallel, preferably at the CISF instead of at operating plants.
- Need to minimize the welding burden on utilities that choose to load STAD canisters from their pools after they cease power producing operations. The repackaging processes of draining, drying, etc. in series are also a burden.
- An option would be to introduce a range of bare UNF transport casks to remove bare UNF from the utilities instead of having the utilities load DPCs or STAD canisters during operations and after shutdown.

Task 8

Identify impacts of the STAD canister concepts on the rest of the UFD system, e.g. transfer casks, transportation system (reactor to CISF, and CISF to repository), CISF concept, storage casks, heavy haul, etc.

Key Outputs

- Since multiple small canisters can fit into one transport cask, shipment rates, i.e. required number of physical shipments to transport a set amount of UNF, don't increase significantly with smaller STAD canisters.
- Cost per shipment decreases slightly with smaller STAD canisters, but this is negated by the increased number of shipments that are required.
- However, overall transportation costs don't vary significantly between STAD canister sizes:
    - All DPCs: $930M (Task Order 11, Scenario1 (1 CISF, stranded sites first, 3000 MT/yr receipt rate))
    - 21/44 TAD canisters: $1,000M (est.)
    - 4/9 STAD canisters (x4): $1,150M (est.)
    - 12/32 STAD canisters: $1,200M (est.)

Task 9

Develop a system auxiliary equipment tree for dealing with spent fuel and identify opportunities for standardization.

Key Outputs

The complete equipment tree is provided in Appendix B and the auxiliary equipment that could potentially be used with multiple canister/cask systems is, as follows:

- Canister welder
- Vacuum drying system
- Helium backfill equipment
- Canister opener
- Air pallet system
- Leak test equipment
- Crane
- Lift slings

Task 10

Understand concerns over re-flooding of UNF canisters, such that any considerations regarding the design and concept of operation of the STAD canisters can be evaluated and incorporated as needed.

Key Outputs

- Safety concerns related to rapid cask cool-down by direct water quenching are avoided by gradual cooling of canister internals by controlling the ingress of water into the cask, in order to mitigate thermal stress.
- NRC Regulation Technical Report 1536 (NUREG-1536) requires an evaluation of cask cool down and reflood procedures to support UNF unloading from a dry condition. Fuel unloading procedures are governed by the plant operating license under 10 CFR 50.
- A large database exists for UNF with burn-up less than 45 GWd/MTU (low-burnup), which is not likely to have a significant amount of hydride reorientation (causes cladding to become brittle) due to limited hydride content.
- A growing database exists for UNF with burn-up greater than 45 GWd/MTU (high-burnup). Data shows that cladding oxidation levels, hydriding of the cladding, higher fuel rod internal pressures and hoop stress increases with high-burnup, especially for high-duty fuel cycles.
- Uncertainty exists on how much the burnup-dependent properties impact the cladding integrity of the fuel during dry storage.
- External stressors than can impact dry cask storage systems include:
    - Thermal Stressors: degradation processes that have thresholds below 400°C may be influenced by higher burnup and longer storage times.
    - Radiation Stressors: change of material properties and depletion of neutron poison materials.
    - Chemical Stressors: water if it has not been fully removed from the canister during loading and drying process.
    - Mechanical Stressors: include loads that could impact systems, structures and components of dry storage systems either continually or for short durations, e.g. off-normal or accidental impacts.
- STAD canister development needs to accommodate ever increasing amounts of high burn-up UNF for extended storage at CISF or repository.
- STAD canister development needs to address, for extended storage, the effects of several drying cycles, rewetting dried fuel, quenching of phases and crud or oxide spallation.

Task 11

Determine cost and volume associated with waste from repackaging activities. The intent of this task being to develop ball-park disposal costs for emptied DPCs, such that the trade-off can be evaluated between using STAD canisters and disposing of some or all of the DPCs, versus directly disposing all of the DPCs in the repository (if this is shown to be possible).. Empty DPC disposal is potentially a major cost and ways to reduce this cost should be identified.

Key Outputs

- Unit disposal cost varies greatly, depending on which information source is used ($50,000/DPC to $500,000/DPC)

- $100,000/DPC may be reasonable if DPCs are disposed of as Class A Low Level Waste (LLW) with no volume reduction.

Task 12

- Research historical Yucca Mountain cost information, then retrieve and condense Task 12 relevant cost information.

Key Outputs

- The information from the cask manufacturers is proprietary and the cost for the TAD canister size is the only information that is publicly available.

Task 13

- Research disposal package size versus UNF inventory on a per country basis, in order to determine if there are any lessons learned.

Key Outputs

- Other repositories in other countries use 4 PWR canisters.
- Those countries have low inventories and higher cost per kW (or cost per assembly).
- Canister type is driven by geology and selected engineered barrier system, not inventory.
- No hard lessons for Task Order 12. Package size for U.S. will depend on geology, which will depend on the volunteer host site selected, and the incentive to adopt larger package sizes is higher in the U.S. because of the much larger quantity of UNF.

Phase 3 Workshop

At the end of Phase 3, a facilitated workshop was held from January 22nd to January 24th, 2013, which was attended by representatives from each company within the Team. The intent of this workshop was to review the results from the above tasks, confirm that continuing to develop the three sizes of STAD canister concept was appropriate, and plan the work for the remainder of the Task Order 12. A description of the workshop results is provided in Appendix B, which includes the presentations that were made at the beginning of the workshop on the results from the Phase 3 work; the key outputs from which were previously described in this section. Key outputs from the workshop are described below.

The Team confirmed that the main recommendation will be to not standardize on one STAD canister size at this time, but instead, until the repository is selected, maintain a multi-STAD canister approach. To demonstrate this approach, the Team identified the following areas of work for completion during the remaining phases of the task.

1) Produce a timeline/schedule that works back from when a repository and CISF are operational to determine when site selection is needed and thus identify when downselection to a final design for a suitable STAD canister can be made.

2) Multiple STAD canister designs could be designed and licensed for storage and transportation in advance of repository site selection. The cost of design and licensing is relatively low; therefore it isn't necessary to wait for a site to be selected. Even once a site is selected, and based on the repository design, multiple STAD canisters that vary in size based on fuel type/characteristics, heat output, etc. could still be used at that site. Following this

approach allows real progress while preserving provides maximum flexibility and avoids the risk of locking into one STAD canister design early that is suitable for only one type of geology. The timeline/schedule identified above will include the logic for pursuing multiple STAD canister designs.

3) As described above, requiring operating sites to package UNF into small or medium STAD canisters will negatively impact operations due to the demands on their resources and the fuel storage pool. However, once an operating site is shutdown, the site operator will have flexibility for loading UNF from the pool into STAD canisters, or shipping bare UNF in casks for packaging at the CISF or repository. The Team agreed that this STAD canister deployment approach warranted modeling and evaluation as part of this task and also proposed that no UNF be removed from a site until the site is shutdown. Reactors will be steadily shutting down over the coming decades which, subject to modeling and evaluation, should support this approach.

3.4 Step 4

Step 4 commenced upon completion of Step 3 and was the final stage of work leading to the completion of the STAD canister system concepts and system analysis detailed in Section 4. During Step 4, in addition to finalizing the design package for the three STAD canister sizes, work focused on completing the following two activities, which are referred to as Phase 4 and Phase 5 in the Technical Proposal submitted to the DOE. Phase 4 focused on using the Total System Model (TSM) to assess the impact of the STAD canister concepts on the total waste management system, including the advantages and disadvantages over time and the trade-off of loading STAD canisters at the utilities versus loading at an interim storage location. Phase 5 focused on the deployment of the STAD canister concepts, including different deployment strategies and constraints, innovative solutions and life cycle cost considerations.

Further to the functional criteria that were developed for the STAD canister concepts during Step 2 (see Section 3.2), and building on the approach identified during Step 3, whereby UNF is not removed from a reactor site until it is shutdown, the Team developed the following goals, objectives and perceived benefits for the proposed STAD canister concepts.

Goals (what the program should achieve):

- Goal #1: Minimize impacts on utility operators as they perform their primary function – producing electricity safely. Once plants are decommissioned, the goal of minimizing impacts on utility operators continues by releasing the site for sale, or reuse as soon as possible.
- Goal #2: Minimize the wasted investment in storage systems that are not integrated into the overall disposal system.
- Goal #3: Maximize the operating efficiency of the integrated waste management system by centralizing repackaging functions.

Goals # 1-3 are intended to create discernible mutual operational and financial benefits for the utilities and DOE. It is believed that the efficiency of the use of reactor site decommissioning funding usage will improve (from a present value perspective) by delaying plant physical

decommissioning for a period of 30 to 40 years after retirement of the reactor(s) and following this revised approach to used fuel management.

Strategies (how the goals can be met):

- Strategy #1: No UNF in dry storage at ISFSI pads is removed from these nuclear sites until the plants are retired and deemed to be permanently shutdown. Bare UNF may be transported from pools at interested operating sites in transportation casks for packaging into STAD canisters at the CISF.
- Strategy #2: DOE will remove the UNF in dry storage at existing shutdown sites when, as stated in the DOE UNF strategy document, operations at the Pilot Interim Storage Facility (PISF) begins in 2021.
- Strategy #3: As plants shut down, cooperating utilities will load UNF from pools into STAD canisters. STAD canisters will be transported to the CISF for storage, or directly to a repository (depending on timing). Onsite storage at the utility will only be required if transportation resources are not available. As part of this approach, a sufficient quantity of licensed STAD canisters will be provided to licensee sites that volunteer to load UNF from their pools into STAD canisters after shutdown. The quantity of STAD canisters provided will be sufficient to move all UNF from site spent fuel pools within 15-20 years after unit retirement.
- Strategy #4: All UNF will be removed from participating retired units within 30 to 40 years after retirement.
- Strategy #5: Operating plants that express an interest in shipping bare UNF from their pools to the Consolidated Interim Storage Facility (CISF) for packaging into STAD canisters will be supported. Note. Per the DOE UNF strategy document, full packaging operations at the CISF are due to begin in 2025.
- Strategy #6: To support these goals, the UNF shipment prioritization shifts to: (1) Remove UNF in DPCs from currently decommissioned sites, (2) Remove bare UNF from pools at interested operating reactors for shipment to the CSF, (3) Remove UNF from retired site spent fuel pools in STAD canisters as the units retire, (4) Remove UNF stored in DPCs from ISFSI pads as the units retire, and (5) Remove UNF from dry storage pads at operating reactors.

Benefits:

- Benefit #1: DOE can honor the standard contract by taking bare UNF from utilities that choose to load it. DOE and utilities have the flexibility to negotiate which canistered fuel they take first.
- Benefit #2: DOE does not interfere with nuclear utility operations without an invitation.
- Benefit #3: It is believed that the above approach will be neutral or better from a decommissioning funding sufficiency perspective for the utilities. The combination of bare fuel shipments to a CISF for loading into STAD canisters (Strategy 1), and having utilities load fuel from spent fuel pools into STAD canisters after shutdown (Strategy 3), minimizes the amount of fuel loaded into DPCs and the significant costs (DPC procurement, DPC to STAD canister repackaging operations and disposal of DPC

carcasses) associated with loading all UNF into storage systems that have no current disposition path.

- Benefit #4: Performing all operations to repackage UNF from existing DPCs into STAD canisters at a central facility will improve efficiency and allow greater investments in standard equipment and processes with the economies of scale provided by a central location.

4 STAD Canister System Concepts and System Analysis

This section addresses key requirements of the SOW and begins in Section 4.1 by describing the STAD canister concepts developed by the Team. Section 4.2 then considers the regulatory and contract compliance associated with the deployment of STAD canisters and the repackaging of existing dry store systems at the interim storage facilities. Section 4.3 provides details on the estimated level of effort that would be required to license either single or multiple STAD canister systems. Section 4.4 takes an in-depth look into the timeline for STAD canister development, i.e. design, licensing, fabrication and deployment, within the milestone dates identified in the DOE strategy for the management of high level waste; including both a Baseline schedule and a Cost Optimized schedule. Section 4.5 takes each of the STAD canister concepts and through logistical analysis of 17 potential deployment scenarios evaluates their impacts on the waste management system (utilities, transportation, interim storage facility and repository), including advantages and disadvantages and life cycle cost considerations. Section 4.6 concludes by providing the results and recommendations from an identification of the technical and non-technical gaps pertaining to the deployment of STAD canisters in the UNF management system.

4.1 STAD Canister System Concepts

The STAD canister system concepts are designed to accommodate all current U.S. commercial PWR and BWR fuel assembly types. Note that “Next Generation” reactor fuel types (e.g., the AP1000 and Advanced Boiling Water Reactor (ABWR)) are not accommodated by this STAD canister design, since they are longer than the general population of current commercial PWR and BWR fuel assembly designs. In addition, it may be economically preferable to develop separate STAD canister designs when required to accommodate unusual fuel assembly designs, such as South Texas Project fuel and Combustion Engineering (CE) 16x16 assemblies with control rod inserts. The STAD canisters can accept PWR and BWR fuel with burnup levels of 80,000 MWd/MTU and 70,000 MWd/MTU, respectively, and with initial ^{235}U enrichment levels of up to 5.0 wt%. The STAD canister designs will also be able to accommodate partial, damaged or MOX fuel assemblies, as well as intact PWR and BWR assemblies.

4.1.1 STAD Canister Concept Descriptions

It is anticipated that a range of STAD canister sizes will be required to satisfy the thermal management constraints of the different repository media. Different repository media have different temperature limits, which in turn drive the maximum allowable STAD canister heat generation level. Smaller STAD canisters have a lower overall internal heat generation level relative to the exterior surface area, so they will produce lower exterior surface temperatures. Thus, a closed repository media like clay, which has a relatively low thermal conductivity and

lower allowable wall temperature, will require much smaller STAD canisters. Open repository designs have higher allowable wall temperatures, and will accommodate larger STAD canisters.

Small sized STAD canisters, with payload capacities of either four (4) PWR assemblies or nine (9) BWR assemblies, may be compatible with repository media with low thermal limits, such as clay. Medium sized STAD canisters, with capacities twelve (12) PWR assemblies or thirty two (32) BWR assemblies, may be compatible with closed repository media with medium thermal limits, such as salt, or a variety of open repository designs. Yucca Mountain sized STAD canisters, with capacities of twenty one (21) PWR assemblies or forty four (44) BWR assemblies, may only be compatible with open repository designs in media with higher thermal limits, such as quartz, granite or tuff. Finally, large "DPC-sized" STAD canisters (i.e., roughly equivalent in overall size and weight to the current generation of commercially available 37 PWR and 89 BWR DPCs), with capacities of twenty four (24) PWR assemblies or sixty eight (68) BWR assemblies, may also be compatible with repository media with higher thermal limits. The designs of the small, medium, and large STAD canister concepts, which are illustrated in Figure 4-1 and summarized in Table 4-1, are discussed in this section. The Yucca Mountain sized STAD canisters, which are expected to be essentially the same as the 21 PWR and 44 BWR concepts developed under the previous TAD contracts, are not described in this section, but are similar in size to the large STAD canisters.

All STAD canister concepts consist of right circular cylinder shaped shell assemblies with shielded top ends and a tube-and-disk style basket assembly. The primary differences between the STAD canister concepts are payload capacity and canister diameter. All STAD canister concepts have 183-inch long cavities; however, for those cases where the infrastructure at a power utility cannot accommodate STAD canisters, a solution could include using either a short STAD canister design or bare UNF cask to move the fuel to the CISF. In addition, all STAD canisters have a top end shield plug and top plate, providing a combined steel thickness necessary for shielding and structural purposes. The thick top lid provides shielding which reduces the dose rates around the canister top end where closure operations will be performed. As shown in Table 4-1, the thickness of the canister cylindrical shells varies from 3/8-inch for the small STAD canister concepts to 5/8-inch for the large STAD canister concepts. The larger STAD canisters are expected to require slightly thicker cylindrical shells than the small STAD canisters in order to satisfy the allowable stress design criteria for design basis conditions. Similarly, the bottom plate of the larger STAD canisters is thicker than that of the small and medium STAD canisters since it must support a significantly greater fuel payload weight. The outside diameters of the STAD canister concepts range from 29-inches for the small STAD canisters to 72-inches for the large STAD canisters. This is prior to the addition of any additional overpack (waste package) required to meet disposal performance requirements.

The STAD canister concepts all employ tube-and-disk style basket assemblies. These basket designs consist of a framework of spacer plates that provide lateral support and maintain the positions of the fuel assembly payload. The spacer plates are supported by and longitudinally positioned by support rods. Two types of criticality designs are used for the STAD canister concepts. An egg-crate neutron absorber plate configuration is used for all BWR baskets (9 BWR, 32 BWR, and 68 BWR) and for the 4 PWR basket, whereas a flux trap configuration is used for the 12 PWR and 24 PWR STAD canister concepts that require additional criticality control.

Figure 4-1. STAD Canister System Concepts

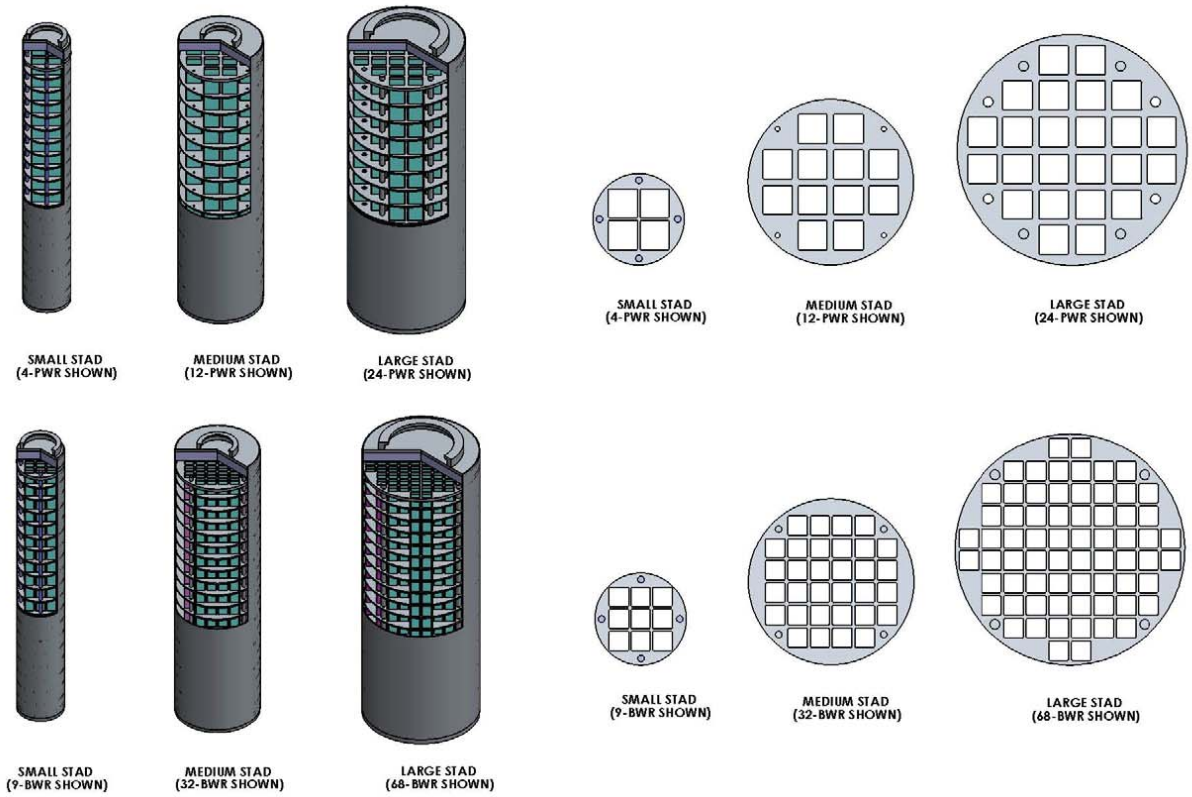

Table 4-1. STAD Canister Design Characteristics

STAD Feature	Small STAD Canisters		Medium STAD Canisters		Large STAD Canisters	
	4 PWR	9 BWR	12 PWR	32 BWR	24 PWR	68 BWR
Canister O.D. (in.)	29.00	29.00	52.00	52.00	72.00	72.00
Canister Length (w/o lift ring) (in.)	194.00	194.00	194.00	194.00	195.00	195.00
Canister Shell Thickness (in.)	0.38	0.38	0.50	0.50	0.63	0.63
Canister Bottom Plate Thickness (in.)	2.00	2.00	2.00	2.00	3.00	3.00
Canister Lid/Shield Plug Thickness (in.)	9.00	9.00	9.00	9.00	9.00	9.00
Canister Cavity Length (in.)	183.00	183.00	183.00	183.00	183.00	183.00
Fuel Tube Opening (in.)	9.00	6.00	9.00	6.00	9.00	6.00
Criticality Design	Egg-Crate	Egg-Crate	Flux Trap	Egg-Crate	Flux Trap	Egg-Crate
Canister Assembly Weight, Empty (lb.)	9,400	10,300	26,100	27,500	53,000	53,400
Fuel Payload Weight (lb.)	6,800	6,300	20,400	22,400	40,800	47,600
Canister Assy. Weight, Loaded (lb.)	16,200	16,600	46,500	50,000	94,000	101,000

The egg-crate neutron absorber plate concepts consist of flat neutron absorber plates with interlocking grooves to form a rectangular matrix of neutron absorbing material that is positioned between the adjacent assembly cells. The neutron absorber egg-crates are positioned axially between the spacer plates, covering the entire length of the active fuel region (except at the spacer plate locations). These design concepts include thin-walled stainless steel guide tubes that are positioned within the openings of the interior spacer plates and extend over the full length of the basket assembly. The purpose of the guide tubes is to line the fuel cell openings to facilitate fuel assembly loading operations (e.g., prevent fuel hang-ups). The guide tubes also maintain the transverse positions of the neutron absorber egg-crate plates.

The flux trap concepts consist of individual square tubes formed from neutron absorber plates that are positioned inside the spacer plate openings (separated by the width of the spacer plate ligaments) and extend over the entire length of the active fuel region. The flux trap concept used for the STAD canisters is similar to the innovative design developed by NAC, International for the 21 PWR TAD canister design. This results in an open space between the adjacent assembly cells, which is filled with water under canister flooding conditions[16]. A neutron absorber plate lies on each side of the water-filled space. The water space, with a neutron absorber sheet on each side, greatly reduces basket reactivity. At the spacer plate locations, the steel space plate ligaments, as opposed to water, occupy the space between adjacent assembly cells. Thus, in summary, two borated stainless steel plates and a water-filled space lie between each pair of adjacent assemblies. At the spacer plate elevations, the space between the two neutron absorber plates is occupied by a stainless steel spacer plate ligament, as opposed to water.

Although other basket types may be feasible and could be developed for STAD canisters, the tube-and-disk style basket design was chosen for the STAD canister concepts given that it is assumed that borated stainless steel will be required for long-term criticality control in a repository and that little or no structural credit will be allowed for borated stainless steel materials for storage and transportation system certification.

The neutron absorber sheets employed in all of the STAD canister concepts are designed in accordance with the original DOE TAD Canister System Specification[17], which requires that borated stainless steel plates have a minimum thickness of 7/16 inches, and a boron concentration of 1.1 to 1.2 wt%. Alternatively, the DOE TAD Specification allows the use of two thinner neutron absorber plates between each pair of adjacent assembly cells based on the application of a specified corrosion allowance to each face of each neutron absorber plate. Thus, a 0.315-inch thick neutron absorber plate is permitted for the flux trap configuration. The neutron absorber sheets must extend over the entire axial length of the assembly fuel regions and cover all four sides of each assembly cell. The TAD Specification also prohibits any bending or welding of the borated stainless steel neutron absorber plates. Those plates also must not support any loads, other than their own weight. Bearing loads through the absorber plates are acceptable.

[16] Although the flux trap design is credited for criticality control under storage and transportation conditions, it may be assumed for post-closure criticality control in a repository that the STAD canister basket structure is fully-corroded resulting in complete collapse of the open space between the adjacent neutron absorber plates. Thus, the flux trap may not be credited for post-closure criticality control.

[17] DOE 2008. Transportation, Aging and Disposal Canister System Performance Specification, WMO-TADCS-000001.

The STAD canister concepts employ the minimum specified neutron absorber plate thicknesses, i.e., single 7/16-inch-thick plates between assembly cells for the egg-crate baskets and two 0.315-inch-thick neutron absorber plates between adjacent cells in the flux trap baskets. The minimum required boron concentration of 1.1 wt% is analyzed. The STAD canister concepts' neutron absorber plates also comply with all the other DOE TAD Specification requirements discussed above. The overall STAD canister concepts do not, however, strictly comply with the original DOE TAD Specification in two ways. Neutron absorber sheets are not placed around the basket edge (i.e., between the outer assembly cells and the canister radial shell), since plates in those locations have little impact on basket reactivity. Also, in the egg-crate basket designs (described above), the spacer plate ligaments penetrate the neutron absorber plates, at regular axial intervals. Although this deviates from the TAD Specification requirement of full axial coverage by the neutron absorber sheets, it is believed to satisfy the intent of the TAD Specification requirement. Furthermore, the criticality analyses of the STAD canister concepts account for these effects, as discussed in Section 4.1.2.1.

As illustrated in Figure 4-1, all of the STAD canisters have an annular lifting pintle ring that is similar to that specified in the original DOE TAD specification. The lifting rings for the large STAD canisters are identical to those specified in the DOE TAD specification. However, the lifting rings for the small and medium sized STAD canisters are reduced in size based on the smaller diameter and lower weights of the small and medium sized STAD canisters.

As discussed in Section 4.1.2.4, the small STAD canisters are expected to have allowable assembly heat generation levels that are similar to or higher than those allowed by most current commercial DPC systems, for storage and transportation, respectively.

4.1.1.1 Small STAD Canister Systems

The 4 PWR and 9 BWR small-sized STAD canister concepts are illustrated in Figure 4-1 and their design characteristics are summarized in Table 4-1. The small sized STAD canisters have an outside diameter of only 29.0 inches. The total weight of both the 4 PWR and 9 BWR STAD canister concepts, in the loaded sealed configuration, is slightly less than 17,000 pounds each. Both the 4 PWR and 9 BWR STAD canister employ the "egg-crate" neutron absorber plate configurations described above in Section 4.1.1. No neutron absorber sheets are required around the basket edge due to neutron leakage effects.

Due to their small size and low payload capacities (4 PWR and 9 BWR), the total quantity of small STAD canisters required to accommodate the entire spent fuel inventory will be significantly larger than that for the larger STAD canister concepts. However, due to the small diameter of the small STAD canisters, it is possible to package multiple small STAD canisters in a storage and transportation overpack. For example, up to four small STAD canisters will fit within a large DPC-sized transportation cask having a 72-inch diameter cavity, as shown in Figure 4-2. Within such a transportation cask cavity, the four STAD canisters will be supported by an internal basket structure with a relatively thick top shield plate to provide shielding of radiation streaming axially between the canisters during canister loading operations. A similar configuration of three small STAD canisters within a transportation cask may be used if a smaller transportation overpack is required. In addition, other design optimizations may be considered to the transportation cask in order to achieve an outer envelope that satisfies the

Association of American Railroads (AAR) Plate B and C dimensional requirements for rail shipments. One such option is to design a transportation cask having a semi-circular cross section with flattened sides on which the lifting trunnions are attached. By reducing the dimension across the trunnions, the available stroke of the impact limiters is maximized without the potential for bottoming out on the trunnions.

The concept of placing spent fuel canisters within larger storage overpacks is a relatively older concept that was advanced in Monitored Retrieval Storage (MRS) design concepts back in the 1980s and early 1990s.[18]

Figure 4-2. Small STAD Canister Transportation Multi-Canister Configuration Concept

Alternatively, small STAD canisters with flattened interior-facing sides (i.e., flattened at the points closest to the adjacent canisters) could be employed, which would reduce the outer envelope of the 2x2 canister array. A third option would be to place three, as opposed to four, small STAD canisters within the transportation cask cavity. This option would allow the use of a transportation cask with a smaller internal cavity diameter, which in turn would allow heavier cask shielding, while remaining within size and weight limits. As a result, the three canister option, due to the increased radiation shielding provided by the heavier cask shielding, would reduce the assembly cooling times required before transportation.

The regulatory, and practical, limits on size and weight for storage casks are less stringent than those that apply for transportation casks. Therefore, storage casks with a larger internal cavity than those of any existing DPC systems may be used to store seven (as opposed to four) small STAD canisters. An arrangement of seven (cylindrical) canisters is very compact and an efficient use of space. An illustration of a typical storage cask containing seven small STAD

[18] A Monitored Retrievable Storage Facility: Technical Background Information, June 1991.

canisters is shown in Figure 4-3. As discussed in Sections 4.1.2.3 and 4.1.2.4, a set of seven canisters will not challenge the shielding or thermal capabilities of a typical storage cask. Such storage casks (containing seven canisters) may be employed at a centralized storage facility and the repository aging facility, and could possibly also be employed for at-reactor-site storage. For the logistics and cost analysis performed in section 4.5, however, a storage cask containing four small STAD canisters is assumed.

Figure 4-3. STAD Canister Storage Overpack Concepts

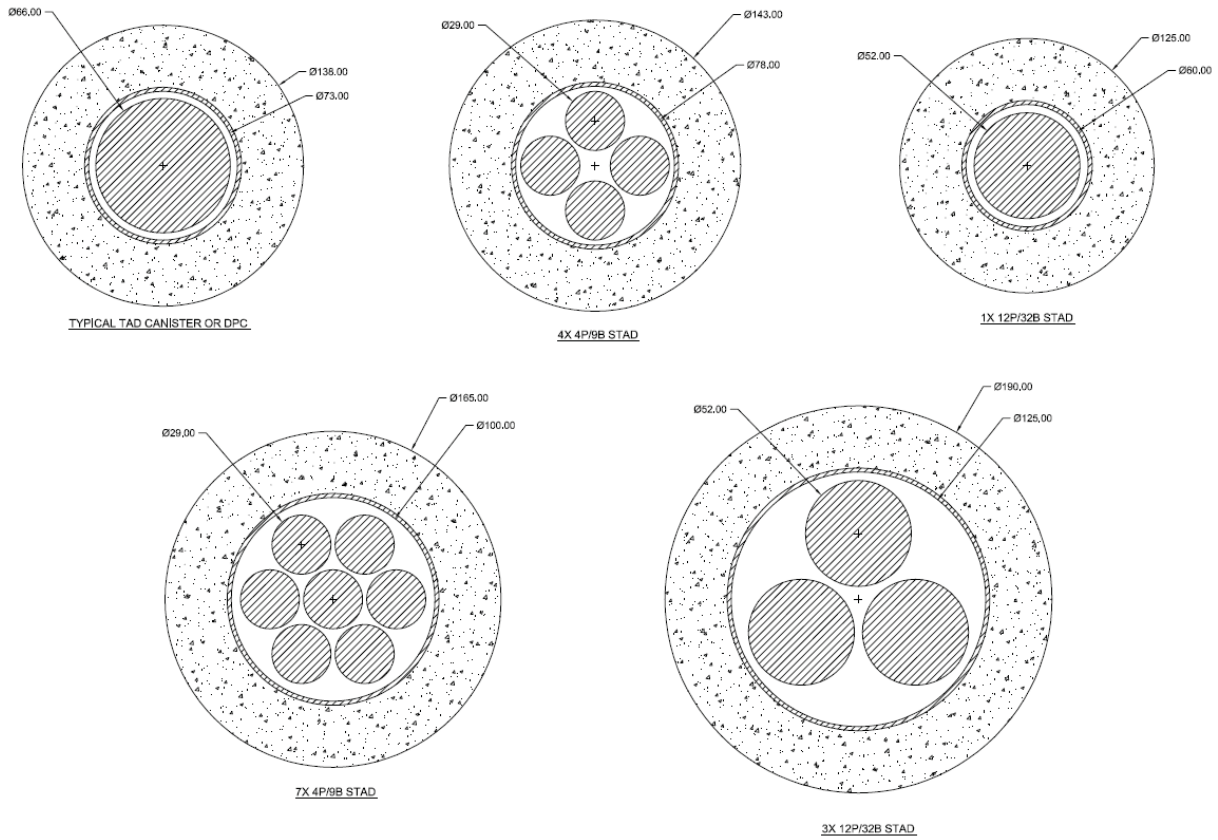

4.1.1.2 Medium Sized STAD Canister Systems

The 12 PWR and 32 BWR medium-sized STAD canister concepts are illustrated in Figure 4-1 and their design characteristics are summarized in Table 4-1. Their exterior diameter is 52.0 inches. The medium-sized STAD canisters employ spacer plate baskets similar to those used in the small STAD canisters. One key difference between the medium-sized PWR STAD canister and the small PWR STAD canister is that the medium-sized PWR canister employs the flux trap basket design described above in Section 4.1.1. Flux traps are necessary for the medium (and large) STAD PWR canisters due to their relative lack of radial neutron leakage. The 32 BWR STAD canister, however, does not employ flux traps. It employs the same egg-crate basket structure, described in Section 4.1.1, that is used for the small BWR STAD canister. This is because the 32 BWR design satisfies the transportation criticality requirements with an egg-crate design. BWR UNF is typically less reactive than PWR UNF and therefore the egg-crate design is sufficient.

The 52.0-inch diameter of the medium-sized STAD canisters is too large to allow multiple canisters to be placed inside a transportation cask (due to size and weight constraints on such casks). However, the diameter is much smaller than the over 72.0-inch cask cavity diameter that would be required by the large STAD canisters, or by a set of four small STAD canisters. As a result, the use of the medium-sized STAD canister would allow the use of a small cavity diameter, heavily-shielded transportation cask. Due to the heavier transport cask shielding (and the increased radiation shielding provided), as well as the relatively small amount of spent fuel (MTUs) within the cask, the required assembly cooling times (for transportation) for the medium-sized STAD canisters will be relatively low; lower than those required for either the small or large STAD canister concepts.

Due to its small size and payload (MTU of fuel), the medium-sized STAD canisters will not challenge the storage/aging cask performance, with respect to structural, thermal, or shielding. A storage cask containing a single medium-sized STAD canister would be significantly smaller than a typical DPC system storage cask, with an interior cavity diameter of approximately 60 inches, as opposed to a cavity diameter of 70 to 80 inches for most DPC system storage casks. Due to the small fuel payload, overall heat loads and radiation source terms will be significantly less than those of DPCs (e.g., approximately 6 MTU versus 11 to 17 MTU for DPC systems). Thus, if any medium-sized STAD canisters were to be stored singly at the reactor site, the required assembly cooling times for such storage would be lower than those required for typical DPC systems.

It is possible to place multiple medium-sized STAD canisters inside a single storage cask, as shown in Figure 4-3. A set of three medium-sized PWR STAD canisters would contain 36 PWR assemblies. Commercial DPC systems that accommodate 37 PWR assemblies currently exist. Thus, the heat generation level from three medium-sized STAD canisters would be similar to that of existing, large DPC canisters (for given assembly burnup levels and cooling times). Therefore, a storage cask of similar design, with similar shielding thicknesses and similar shielding and thermal performance, could accommodate three medium-sized STAD canisters, with required assembly cooling times similar to those required for on-site storage with those current, existing DPC systems. However, the cask's physical size would be much larger than any currently-existing DPC system. The 37 PWR DPC system has a storage cask cavity

diameter of less than 80 inches, whereas a storage cask containing three medium-sized STAD canisters would require an inner cavity diameter of approximately 125 inches so the storage cask would be much larger and heavier than those of the current DPC storage cask designs. A three canister configuration for storage at the CISF is assumed in the logistics and cost analysis in section 4.5. Note that for a CISF, the economies of scale may justify "walls" or other storage configurations rather than cylindrical storage units.

The medium STAD canister option is less flexible than the small STAD canister option, since only one canister can be placed into the transportation casks. It is intended for a salt repository medium, but could also be used in a hard rock open repository. Whereas its canister capacities are moderate (higher than the small STAD canisters and lower than the large STAD canisters), it has a smaller overall assembly payload capacity within the transportation and (probably) storage casks than either the small or large. However, due to the small cask payload capacities, this option offers the lowest required assembly cooling times, for transportation as well as storage/aging, as discussed below in Sections 4.1.2.3 and 4.1.2.4.

4.1.1.3 Large STAD Canister Systems

The 24 PWR and 68 BWR large "DPC-sized" STAD canister concepts are illustrated in Figure 4-1 and their design characteristics are summarized in Table 4-1. The large STAD canister concepts have an exterior diameter of 72.0 inches. The 24 PWR STAD canister concept employs a flux trap spacer plate basket design, whereas, the 68 BWR STAD canister uses an egg-crate basket design.

The 72.0-inch diameter large STAD canisters are approximately the same size and weight as the latest generation of large DPC designs (e.g., 37PWR) for which both storage and transportation casks have been designed. Thus, a single large STAD canister can be placed into those transportation and storage casks, or casks of a very similar design. Required assembly cooling times, for both storage and transportation, will be similar to those required for those existing large DPC systems. Due to the use of flux traps for PWR STAD canisters, which are not present in the large, existing DPC systems, criticality performance of the 24 PWR STAD canister concept will be superior to that of the existing DPC canisters.

The large STAD canister option is less flexible than the other, smaller STAD canister options. Only one large STAD canister can be placed into a storage or transportation cask. It could only be used in an open repository design that can take high temperatures (e.g., welded tuff, or crystalline rock with post emplacement ventilation). Also, the large STAD canister may not be able to be readily accommodated by Yucca Mountain, or a similar, tuff repository design, since the Yucca Mountain scientific and licensing evaluations were based upon repository overpacks with a somewhat smaller assembly capacity. Due to the large assembly capacity within the transportation and storage casks, assembly cooling times required for transportation and storage are relatively long.

4.1.2 STAD Canister Concept Design Approach

The conceptual designs of the STAD canisters have been developed based on select technical evaluations for those conditions expected to govern the design configurations. As discussed in

Section 4.1.2.1, bounding criticality evaluations of the STAD canister concepts were performed to provide reasonable assurance that they will be capable of satisfying the 10 CFR 71 transport criticality control requirements, however, storage applications under 10 CFR 72 use soluble boron credit for loading operations. In addition, structural evaluations of the STAD canister concepts have been performed to provide reasonable assurance that they will satisfy applicable design criteria for the full range of on-site storage and transportation loading conditions, as discussed in Section 4.1.2.2. Finally, shielding and thermal evaluations of the STAD canister concepts, based on comparison to similar systems and reasoned engineering judgment, are discussed in Sections 4.1.2.3 and 4.1.2.4.

4.1.2.1 Criticality Analyses

Preliminary criticality analyses were performed, i.e. scoping runs, for the purpose of determining the feasibility of the STAD canister concepts, using the industry-standard Monte Carlo N-Particle (MCNP)[19] code, to evaluate the criticality performance of the STAD canister concepts described in Section 4.1.1. It is assumed that the proposed set of STAD canisters will have to accommodate virtually all of the U.S. PWR and BWR spent fuel inventory. It is also assumed that the use of at least some burnup credit (e.g., a conservative, actinide-only analysis) can be used to license the PWR canisters for transportation. Transportation (as opposed to storage or aging) will be the limiting condition for criticality, since ingress of fresh water into the canister interior must be assumed. With respect to disposal, the proposed STAD canister concepts conform to the Yucca Mountain TAD specification requirements.

4.1.2.1.1 PWR Assembly Analysis:

The PWR STAD canisters are evaluated by analyzing fresh (unburned), intact PWR fuel assemblies in every cell of the small, medium and large STAD canister configurations described in Section 4.1.1. The analyses determine the maximum allowable fresh fuel ^{235}U enrichment level at which the 10 CFR 71 criticality requirements (i.e., k_{eff} under 0.95 with sufficient margin to account for code bias and uncertainty effects) are met, assuming fresh water throughout the canister and cask interiors. The PWR criticality analyses model the relatively reactive W 15x15 standard assembly. Other PWR assembly types (e.g., the W 17x17 OFA assembly) would yield very similar results.

Although the PWR STAD canisters are expected to be licensed for transportation based on burnup credit criticality analyses, these initial scoping evaluations, performed to estimate the performance and adequacy of the proposed STAD canister concepts, are performed using simple, fresh (unburned) PWR fuel criticality analyses. The following approach is used to infer overall (burnup credit) criticality performance of the canisters based on fresh fuel criticality results, and to determine the allowable fresh fuel enrichment levels (calculated by the analyses described above) that would correspond to a canister that can adequately cover the U.S. spent PWR fuel inventory.

Figure 4-4 presents a scatter plot of the US spent PWR fuel inventory (reproduced from Figure 10 of Oak Ridge National Laboratory Report No. ORNL/LTR-2012/448, dated September 28,

[19] Los Alamos National Laboratory, MCNP – A General Monte Carlo N-Particle Transport Code, Version 5, April 24, 2003.

2012) that gives the numbers of assemblies with each combination of final burnup and initial enrichment. Figure 4-4 also shows burnup curves, which give minimum required assembly burnup as a function of assembly initial ^{235}U enrichment, that were determined for different cask configurations evaluated in the ORNL report. In the figure, the burnup curves are overlaid unto the spent fuel inventory. Table 5 of the ORNL report states that the (lower) curve for the "GBC-32" cask accommodates 98.52% of the US spent PWR fuel inventory (i.e., 98.52% of the US spent PWR fuel assemblies lie above the curve).

Figure 4-4. US Spent PWR Fuel Inventory and Cask Fuel Acceptance (Figure 10 from Report ORNL/LTR-2012/448, dated September 28, 2012)

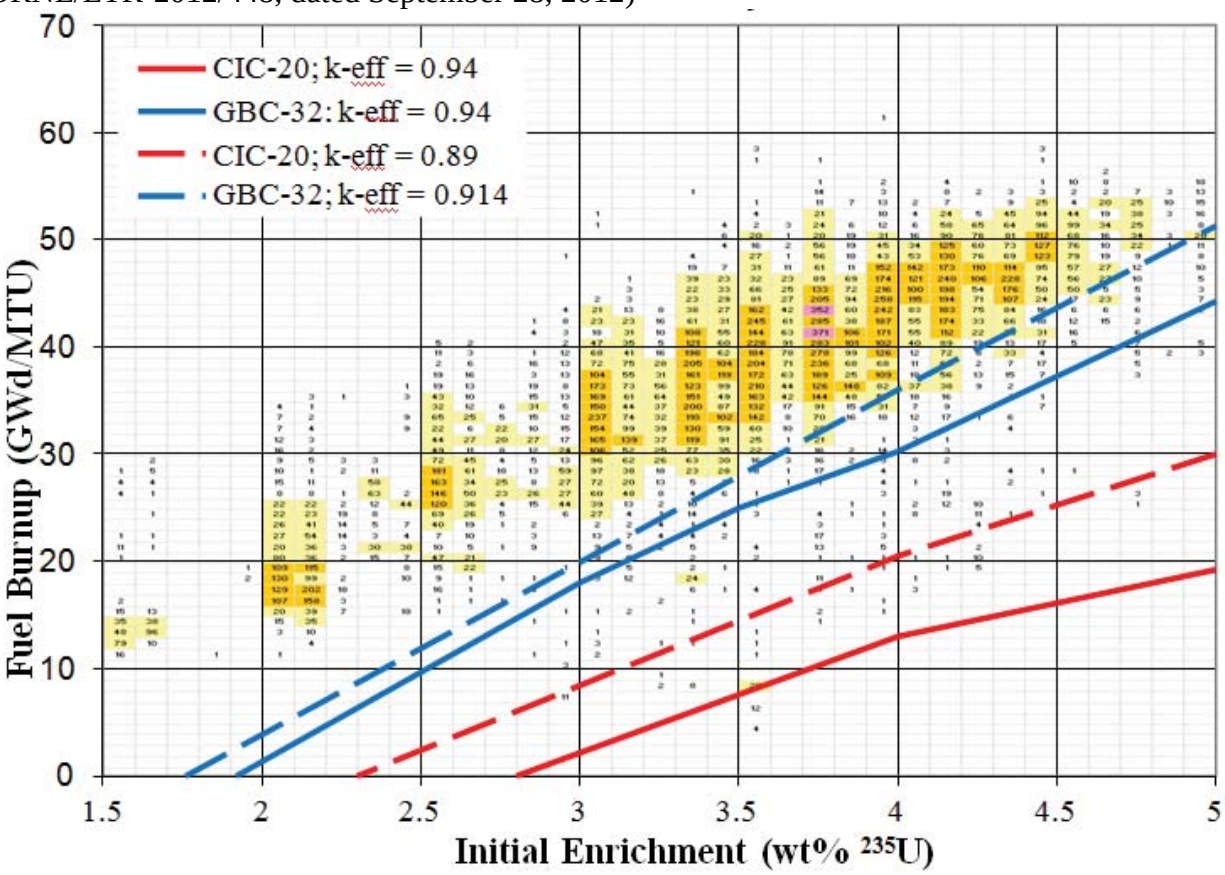

The "GBC-32" burnup curve presented in Figure 4-4 is based upon an aggressive burnup credit analysis that models fission product isotopes. However, burnup curves have been developed for current generation of large DPC systems (e.g., 37P), using conservative, actinide-only burnup credit analysis. Some such DPC system burnup curves are similar to or lower than the (lower) "GBC-32" burnup curve in Figure 4-4, over most of the enrichment range (i.e., they have lower minimum burnup requirements). Thus, such DPC system curves would accommodate an even larger fraction (approximately 99%) of the US spent PWR fuel inventory. The minimum required assembly burnup levels for those actinide-only DPC system burnup curves (that are similar to the "GBC-32" curve shown in Figure 4-4) fall to zero at an initial enrichment level of approximately 2.3%.

It is assumed that any canister/cask configuration that has a maximum allowable fresh fuel enrichment level of 2.3% will have an actinide-only burnup curve that is similar to the (lower) "GBC-32" curve presented in Figure 4-4. Thus, such a canister/cask configuration should be able to accommodate roughly 99% of the US spent PWR fuel inventory. To estimate the burnup curve of a canister/cask configuration with an allowable fresh fuel initial enrichment level of approximately 3%, the curves shown in Figure 4-4 can be shifted to the right by 0.7% in enrichment. The percentage of the spent fuel inventory accommodated by such a (shifted) curve would be similar to or slightly larger than that accommodated by the upper "CIC-20" curve shown in Figure 4-4. Table 5 of the ORNL report states that the (upper) "CIC-20" curve would accommodate 99.66% of the US spent PWR fuel inventory. Thus, it is estimated that a canister/cask system that meets the 10 CFR 71 criticality requirements with 3.0% enriched fresh PWR fuel would be able to accommodate as much as ~99.75% of the US spent PWR fuel inventory, using a conservative, actinide-only burnup credit analysis as the basis for qualification.

4.1.2.1.1.1 Four PWR STAD Canister Criticality Analysis:

This analysis models the small PWR STAD canister configuration described in Section 4.1.1 and illustrated in Figure 4-2. Four small PWR STAD canisters lie inside a typical steel-lead-steel transport cask configuration. Each canister contains four unburned W 15x15 Std. PWR assemblies. The "egg-crate" basket configuration described in Section 4.1 is modeled. Each PWR assembly lies inside a thin (0.075") walled square stainless steel guide sleeve. A "central cross" of 7/16-inch-thick borated stainless steel, with a 1.1% boron concentration, is modeled between the adjacent PWR assemblies (and guide sleeves). The boron concentration in the steel is conservatively reduced by 10% to account for potential variations in boron concentration. No borated stainless steel is placed around the periphery of the basket. Thus, only the thin, unborated stainless steel guide sleeve wall lies between the outer surfaces of the PWR assemblies and the stainless steel radial shells of the small PWR STAD canisters. This analysis also models the steel spacer plates, canister shell and lids, in addition to the PWR fuel assemblies, guide sleeves and neutron absorber sheets.

As discussed in Section 4.1.1, the spacer plate ligaments penetrate the borated stainless steel sheets in the egg-crate basket designs. This results in unborated stainless steel replacing borated stainless steel in the spaces between the assembly guide sleeves, at the spacer plate elevations. This, in turn, results in some degree of neutron streaming through those axial gaps in the borated stainless steel (i.e., through the spacer plate ligaments), which may reduce the criticality performance of the canister. The criticality analyses accurately model these spacer plate penetrations, and therefore account for any such neutron streaming.

The results of the above criticality analysis show that the configuration described in Section 4.1.1, that has four small PWR STAD canisters inside a transportation cask, can accommodate unburned PWR fuel with an initial enrichment of ~2.75% while meeting the 10 CFR 71 criticality requirements (~3.0% for assemblies that contain water-displacing inserts such as burnable poison rod assemblies). Therefore, based on the discussion above, it is estimated that the four small PWR STAD canister configuration can accommodate ~99.5% of the US intact spent PWR fuel inventory (~99%, at least). The low reactivity of the four canister configuration

is due to the small number of assemblies within each canister, and the large water spaces between the canisters, within the transportation cask.

Also, options exist for the very small fraction of the PWR fuel inventory that would not directly qualify for loading in the small PWR STAD canister (i.e., would fall below the configuration's burnup curve). Leaving a few assembly sleeves empty (e.g., one of the four sleeves of each canister) greatly reduces configuration reactivity and greatly increases the allowable reactivity of the loaded assemblies. Such partial loading could be employed in a very small fraction of the loaded casks, in order to accommodate this very small fraction of the assembly inventory, without significantly impacting the overall number of loaded (and shipped) casks.

Another option for very high reactivity PWR fuel is to use Reactor Control Cluster Assemblies (RCCAs) that are present at all the nuclear plants and also require storage, transport and disposal. Such RCCAs are often loaded and stored along with the spent fuel assemblies in DPC systems being used today. Placement of an RCCA into an assembly greatly reduces its reactivity, even if the RCCA has seen significant exposure (neutron fluence). Insertion of an RCCA, and crediting its presence in criticality licensing analyses, would be expected to allow almost any existing intact PWR assembly to be loaded into small PWR STAD canister. The number of available RCCAs, based on approved loading configuration, is expected to greatly exceed the number of PWR assemblies that would need an RCCA to qualify for loading in the canister.

4.1.2.1.1.2 Twelve PWR and Twenty-Four PWR STAD Canister Criticality Analyses:

For the 12 PWR and 24 PWR medium and large STAD canisters, it is reasonably assumed that only one canister will be placed inside of each transportation cask. Given the relatively low capacity of these canisters in comparison to those of present-day DPC canisters, there will be ample space for flux traps between the adjacent PWR assemblies (which greatly reduce canister reactivity). These flux traps are necessary, in the medium and large STAD canisters, to offset the effects of reduced radial neutron leakage that occurs for larger assembly payloads. Thus, both the medium and large STAD canisters employ the flux trap basket design described in Section 4.1.1.

As discussed in Section 4.1.1, the spacer plates do not penetrate the neutron absorber plates in the flux trap basket design. As a result, there are no axial gaps in the borated stainless steel neutron absorber sheets. The spacer plates do, however, displace the water in the flux traps (between the neutron absorber sheets) at the axial locations where they lie. Thus, there is some neutron streaming through the spacer plate steel within the flux traps. The criticality analyses rigorously model the spacer plate configurations and therefore account for any such neutron streaming.

For larger assembly arrays like those present in the medium and large PWR STAD canisters, radial neutron leakage is not expected to greatly reduce overall system reactivity, nor significantly increase allowable assembly enrichment. Therefore, these criticality analyses simply and very conservatively model an infinite array of unburned PWR assemblies, with neutron absorber sheets and water flux traps between all the adjacent PWR assemblies within the infinite array. Thick steel and water reflection is modeled at the top and bottom ends. The

results of the infinite-array analyses are conservatively applied for both the medium- and large PWR STAD canisters.

The analysis results show that the larger PWR STAD canisters allow unburned PWR assembly enrichments of ~2.5% and over 3.0%, for flux trap (water) thicknesses of 0.5 inches and 1.0 inches, respectively. Therefore, based on the discussion above, it is estimated that the medium- and large PWR STAD canisters can accommodate ~99% of the US intact spent PWR fuel inventory if 0.5-inch flux traps are used, and ~99.75% of the US intact spent PWR fuel inventory if 1.0-inch flux traps are used. As discussed above for the small PWR STAD canister configuration, partially loaded canister configurations and/or inserted RCCAs can be used to accommodate the tiny fraction of U.S. spent PWR fuel assemblies that do not directly qualify for loading into the medium- and large PWR STAD canisters.

4.1.2.1.2 BWR Assembly Analyses

The BWR STAD canisters are evaluated by analyzing fresh (unburned), intact BWR fuel assemblies in every cell of the small, medium and large STAD canister configurations described in Section 4.1.1. The analyses determine the maximum allowable fresh fuel ^{235}U enrichment level at which the 10 CFR 71 criticality requirements (i.e., k_{eff} under 0.95 with sufficient margin to account for code bias and uncertainty effects) are met, assuming fresh water throughout the canister and cask interiors. The BWR criticality analyses model the relatively reactive GE 8x8 standard assembly. Other BWR assembly types would yield very similar results.

Unlike with the PWR STAD canisters, it is expected that the BWR STAD canisters will be licensed using standard, relatively simple, fresh (unburned) fuel criticality analyses. Burnup credit has never been employed for BWR fuel cask systems. Also, given the smaller size of BWR assemblies, burnup credit is generally not needed (to maximize cask capacity, etc.), since flux traps are not needed even if fresh fuel criticality analyses are used. Therefore, the results of the fresh fuel criticality analyses used in these initial scoping evaluations are directly applicable, and provide a direct measure of the BWR STAD canister concepts' performance.

None of the BWR STAD canisters employ flux traps, rather they all use the "egg-crate" basket design described in Section 4.1.1. The BWR STAD canister criticality analyses model the penetrations in the neutron absorber plates by the spacer plate ligaments, which occur at the spacer plate elevations, and thus account for any associated neutron streaming effects.

4.1.2.1.2.1 Nine BWR STAD Canister Analysis:

The small BWR STAD canister configuration is similar to that of the PWR configuration, except that each of the four STAD canisters, which are placed inside the transportation cask, contain nine BWR assemblies, as opposed to four PWR assemblies.

The results of the criticality evaluation show that four small BWR STAD canisters (described in Section 4.1.1), inside the transport cask, can accommodate unburned BWR fuel assemblies with initial enrichments up to 5.0%, with a significant amount of criticality margin to spare. Thus, this configuration will be able to accommodate the entire US spent BWR fuel inventory, since

burnup is not required and no BWR assemblies with enrichments over 5.0% exist within the current U.S. spent fuel inventory.

4.1.2.1.2.2 Thirty-Two BWR and Sixty-Eight BWR STAD Canister Analyses:

The 32 BWR and 68 BWR STAD medium and large STAD canisters were conservatively evaluated using a simple infinite array analysis. Unlike the modeled infinite PWR assembly array, the BWR assembly array does not have flux traps. The thin stainless steel guide sleeve walls and a single 7/16-inch-thick borated stainless steel neutron absorber sheet are all that lies between adjacent BWR assemblies in the infinite array. Thick water and steel reflection is modeled above and below the infinite assembly array.

The results of the infinite BWR assembly array analyses show that the 32 BWR and 64 BWR STAD canisters will be able to accommodate BWR assembly enrichments up to 4.5%, regardless of burnup level. The fraction of the US spent BWR fuel assembly inventory that has an initial enrichment level over 4.5% is very small. The suggested approach for accommodating BWR fuel assemblies having initial enrichments over 4.5% wt% ^{235}U is to license "short-loaded" basket configurations, as commonly done with existing DPC systems. With this approach, a small number of specific fuel cells in the central region of the canister are not loaded with fuel, which results in a lower overall canister reactivity with only a slight reduction in payload capacity. Generally, this approach is most economical since the canister is not over-designed for the majority of the fuel population that has initial enrichments that do not exceed 4.5% wt% ^{235}U."

4.1.2.1.3 Criticality Treatment of Damaged Fuel

The criticality scoping analyses presented above evaluate intact PWR and BWR spent fuel assemblies. Damaged fuel assemblies have not been analyzed at this time. The following considerations, however, apply.

Damaged fuel assemblies will have to be placed within sealed damaged fuel cans (with screened openings for drainage and drying) that confine any loose fuel material. These cans may or may not require an increased cell opening width. Also, due to the potential physical configurations that the fissile material may assume, within the damaged fuel can, the presence of such cans may significantly increase the calculated reactivity of any canister that contains damaged fuel assemblies. This configuration will result in a reduction in the allowable enrichment, or an increase in required burnup levels for PWR systems employing burnup credit.

One option for accommodating damaged fuel assemblies would be to include sleeves that can accommodate damaged fuel cans around the periphery of the standard STAD canister basket. To offset the increase in reactivity from the damaged fuel cans (and their contents), lower allowable enrichment levels (or higher required burnup levels) may be required for canisters containing damaged fuel. Lower reactivity (i.e., lower enrichment and/or higher burnup) intact fuel could be set aside for loading in the other (intact fuel) sleeves within the damaged fuel canisters.

Alternatively, one could license partially loaded canister configurations that have empty sleeves in the basket center and damaged fuel cans at the periphery. The empty cells would offset the

reactivity increase from the damaged fuel can contents, resulting in intact fuel enrichment and or burnup limits that are similar to those that would apply for canisters that do not contain damaged fuel.

A third option would be to develop specific canister designs to handle damaged fuel (only). Intact assemblies would not be loaded into these special canisters. Such canisters may have a lower capacity or have a somewhat larger diameter. Additional poison between adjacent assemblies or (more likely) larger flux traps would be employed. A damaged BWR assembly may employ flux traps, whereas the intact BWR assembly basket will not.

4.1.2.2 Structural Evaluation

The structural designs of the STAD canister concepts are based primarily on similarity to existing DPC systems. For the purposes of developing the conceptual STAD canister designs, the large STAD canister shell assembly component thicknesses shown in Table 4-1 (i.e., cylindrical shell, bottom plate, and top plate) are assumed equal to those of similar existing large DPC systems. The canister lifting ring design for the large STAD canisters is identical to the lifting ring design specified in the DOE TAD specification. The lifting rings for the small and medium sized STAD canisters are reduced in size based on the smaller diameter and lower weights of the small and medium sized STAD canisters. The thicknesses of the canister shell components for the small and medium STAD canister concepts are reduced slightly from those of the large STAD canister based on their smaller size and weights.

For the development of the STAD canister basket assembly concepts, evaluations of STAD canister spacer plate designs have been performed using Finite Element Analysis (FEA) methods for a conservative upper-bound equivalent static side drop load of 75*g*. This load is considered bounding for transportation Hypothetical Accident Condition (HAC) side drop loads for most, if not all, DPC transportation packages. Furthermore, experience shows that for DPC basket designs the HAC side drop condition is generally the most limiting load condition for all on-site storage and transportation conditions. For each of the STAD canister concepts, a single spacer plate is evaluated for transverse loading resulting from the 75*g* side drop load (i.e., loading based on tributary weights of the heaviest fuel payload and other basket assembly components). Elastic-plastic properties are modeled for the spacer plates based on Type 316 stainless steel at an assumed upper bound basket temperature of 700°F. Gap elements are modeled around the perimeter of the spacer plate to simulate the non-linear support conditions provided by the canister shell. Each STAD canister spacer plate configuration is evaluated for a range of HAC side drop impact orientations, based on the spacer plate designs, to determine the maximum stresses and deformations in accordance with the requirements of 10 CFR 71.

FEA evaluations of the STAD canister spacer plate concepts are performed using the ANSYS general-purpose finite element computer code. The maximum membrane (P_m and P_L) and membrane plus bending ($P_L + P_b$) results of the analyses are lower than the corresponding ASME Code limits for plastic system analysis. In addition, the spacer plate ligament deformations are acceptable and the spacer plates maintain structurally stability. Although a more exhaustive evaluation of the STAD canister designs will ultimately be required, the evaluations performed provide reasonable assurance that the conceptual designs of the STAD canister spacer plates are acceptable for the full range of design loading conditions for on-site storage and transportation.

4.1.2.3 Shielding Evaluation

Shielding considerations are not expected to drive, or affect, the design of the STAD canisters. Many commercial DPCs employ spacer plate designs similar to those shown in Section 4.1.1. The amount of interior self-shielding present in the proposed STAD canisters is similar to that present in the current DPC canisters that employ spacer plate designs. Furthermore, the PWR and BWR assembly payloads for the proposed STAD canisters are roughly equal to or lower than that present in the (similar) DPC canisters. This results in somewhat lower neutron dose rates outside the canister. External gamma dose rates are relatively insensitive to the canister's size or payload capacity. Given that the size of the proposed STAD canisters (or groups of four small STAD canisters) is equal to that used by some current DPC systems (e.g., a 72-inch outer diameter), the amount of transportation and storage cask shielding that can be employed, without exceeding size or weight constraints, should be similar to that used by the casks of those existing commercial systems.

Thus, for similar assembly burnup levels and cooling times, the exterior dose rates for the proposed STAD canister and cask systems should be very similar to that which applies for many commercial DPC systems. As a result, required assembly cooling times (for a given burnup level, etc.) for the proposed STAD canister and cask systems should be similar to those that apply for existing commercial DPC systems.

For the storage and aging portions of the STAD canister life cycle, there are additional reasons why shielding will not be an issue, or design driver. It is relatively easy and inexpensive to add shielding to storage casks (e.g., to increase the concrete shield thickness) to any desired level, since strict weight or size constraints generally do not apply. In fact, if desired, one could place more than four small STAD canisters into a storage cask (at the nuclear plant, a centralized interim storage facility, or at a repository aging facility). Seven canisters would fit fairly well into a typical DPC system storage cask, as shown in Figure 4-3. Such an increase in storage cask capacity would not require a significant increase in the thickness of the shielding.

For transportation, on the other hand, there are fairly tight limits on both cask size and weight. However, for the reasons given above, the required assembly cooling times (vs. burnup) for transportation, for the proposed STAD canisters, should be similar to those specified for existing DPC systems that employ ~72-inch diameter canisters. It should be noted, however, that the required assembly cooling times for transportation are relatively long for DPC systems that employ 72-inch canisters (i.e., ~30-40 years for 50-60 GWd/MTU fuel). If significantly shorter transportation cooling times are desired for the STAD canister systems (e.g., to ship younger fuel to centralized interim storage or aging facilities), then smaller, lower capacity, more heavily shielded transport casks may have to be used

If the medium-sized (i.e., 12 PWR or 32 BWR) STAD canister is used, this will not be an issue, since only one such canister can be shipped at a time, and its smaller diameter will allow the use of a transportation cask with a smaller cavity diameter and much heavier shielding. That, in turn, will allow much shorter assembly cooling times. For the small STAD canisters, shorter required assembly cooling times could be achieved by loading three, as opposed to four, canisters into a transportation cask with a smaller cavity diameter and heavier shielding. The higher (four

canister) capacity transportation cask could still be an option for assemblies with long cooling times and/or lower burnup (e.g., assemblies that currently exist and shut down reactor sites).

If the 24 PWR or 68 BWR large STAD canisters were chosen (e.g., if the repository has an open configuration), these transportation issues may be a significant limitation. The large diameter and weight of the 24 PWR or 68 BWR STAD canisters may limit the amount of transportation cask shielding that can be employed, while remaining within transport cask size and weight limits, which may result in very long required assembly cooling times before transportation would be permissible. Unlike the small STAD canisters, these canisters do not offer the possibility of reducing the transport cask payload. If lower cooling times are needed, one would not be able to transport these large STAD canisters from a plant site until relatively long periods of SNF decay had occurred. In such a case transportation would instead be delayed unless the assemblies were shipped (perhaps in a bare UNF transportation cask) to the CISF or aging facility before loading the large STAD canisters there. This approach would at least partially defeat the original purpose of the STAD canisters.

Also of note is the fact that the original DOE TAD canister, designed for the (tuff medium) Yucca Mountain repository, had a capacity of 21 PWR assemblies, i.e., not much lower than that of the proposed large STAD canister. The waste package, and repository design in general, was based on a smaller, 66-inch canister diameter. Thus, the 72-inch diameter large STAD canisters may require modification in waste package and overall repository design, for only a small increase in capacity. Furthermore, even the small reduction in capacity (i.e., from 24 to 21 PWR assemblies) results in a significant reduction in assembly cooling times required for transportation since the reduction in canister diameter and weight allow for a significant amount of additional transport cask shielding. A typical transportation cask system designed to accommodate a 21PWR canister may have required cooling times of only 12 to 18 years for 50 to 60 GWd/MTU fuel. For these reasons, a 21PWR or 44BWR canister, similar to the original DOE TAD canister, may be a better option than the large (24 PWR/68 BWR) STAD canister, especially if shorter assembly cooling times at the time of shipment were desired.

4.1.2.4 Thermal Evaluation

The number of assemblies, and metric tons of uranium, in the STAD canisters, is equal to or lower than that present in existing DPC systems, including ones that employ a similar spacer plate basket design. Thus, the allowable assembly heat generation levels for the proposed STAD canister systems are expected to be equal to or greater than those allowed for those existing DPC systems.

With respect to the on-site storage of STAD canisters, some existing DPC storage casks have allowable overall heat generation levels of ~30 kW or more. Maximum allowable heat generation levels for current PWR DPC storage system are generally around 1.0 kW per assembly. Given the lower assembly capacity of the STAD canisters, allowable assembly heat generation levels (for storage) higher than 1.0 kW may be possible, although canister interior temperature limits will likely prevent the allowable assembly heat load to scale up in direct proportion to the reduction in capacity (vs. that of the corresponding DPC system).

With the small STAD canisters, although four canisters will be loaded into the transportation cask, more than four (e.g., seven) canisters could be loaded into a typical storage cask, without exceeding the cask's thermal or temperature limits. Seven small PWR STAD canisters would contain 28 PWR assemblies. A per-assembly heat load of 1.0 kW would result in an overall cask heat load of 28 kW, which can be accommodated by most existing DPC storage casks. A seven canister storage cask would have to be physically larger, but could clearly remove at least as much heat.

For transportation, heat generation limits are generally driven by the cask's neutron shield temperature limit. Thus, the overall canister heat generation, as opposed to the peak individual assembly heat generation, will be the limiting factor in most cases. Thus, STAD canisters, which have lower assembly capacities than those present in most existing DPC systems, will have higher allowable per-assembly heat loads for transportation. The current generation of large DPC systems accommodates between 32 to 37 PWR assemblies per canister, compared to 16 PWR assemblies for four 4 PWR STAD canisters, 12 PWR assemblies for the medium STAD canister, and 24 PWR assemblies for a large STAD canister. Therefore, for the case in which four 4 PWR STAD canisters are transported in a large DPC-size transportation cask, the per assembly heat load would be expected to be more than two times higher than the assembly heat load limit for a 37 PWR canister, assuming that the allowable heat load varies as the ratio of the number of fuel assemblies (i.e., 37/16). It should be noted, however, that required assembly cooling times for transportation are often governed by shielding (cask exterior dose rate limits) as opposed to thermal considerations. Cask exterior dose rates are much less sensitive to cask assembly capacity than are cask system component temperatures (which often scale with overall cask heat load, which in turn scales with assembly capacity). For this reason, the required assembly cooling times, for transportation, may not be much lower than those required for existing DPC systems. An exception to this would be the 12 PWR and 32 BWR STAD canisters, whose small size and weight would allow transportation casks with thicker shielding.

With respect to storage at away-from-reactor sites (i.e., a CISF or a repository aging facility), allowable assembly heat generation levels will be driven by the more stringent transportation cask requirements, since the assemblies have to be shipped to those locations before being placed into storage. However, with the small STAD canister concept, multiple canisters (up to seven) could be loaded into a single storage cask without exceeding any thermal limits. As discussed above for at-plant-site storage, a typical storage cask could accept seven canisters, each having a total heat load of approximately 4 kW.

In summary, the thermal performance of the STAD canister and cask concepts described in Section 4.1.1 will be similar to or better than the thermal performance of currently existing large DPC systems, in terms of allowable assembly heat generation levels, for storage and transportation.

4.2 Regulatory and Contract Compliance

Developing viable concepts for a new standardized canister that could be used for transportation, storage and disposal requires an understanding of the regulatory requirements and their effect on STAD canister design. The regulations that apply to transportation (10 CFR 71) and storage (10 CFR 72) are well understood and have been in common use for many years, even though the

licensing requirements under the two Parts are not perfectly harmonized.[20] For example, the Certificate of Compliance (COC) period for a transportation cask is five years, but the COC period for a storage cask is up to 40 years. These disconnects have been addressed through amendments and other efforts by the licensing applicants over the years, and have been workable. Now the NRC is considering changes to the regulations to better harmonize the requirements for transportation and storage. Both transportation and storage cask licenses are based on a set of deterministic performance requirements that makes the design process fairly straightforward. The regulatory changes being contemplated do not appear to include a change to the basic design and safety requirements. The NRC has indicated any new rulemaking affecting harmonization of the regulations under 10 CFR 71 and 10 CFR 72 would not be likely before 2017.

Unfortunately, no new generic disposal regulations for UNF disposal in a repository have been promulgated. The only regulations for disposing of SNF to date were part of the site specific Yucca Mountain disposal regulations in 10 CFR 63 and the more generic requirements of 10 CFR 60, which is out dated. The TAD canister design started in 2006 was developed specifically to fit into Yucca Mountain's overall probabilistic performance requirements.

Yucca Mountain was designated as the sole repository for DOE to consider in the 1987 Amendments to the Nuclear Waste Policy Act. In the years since then, a considerable body of knowledge has been developed regarding that specific volcanic tuff formation. Although the US has not focused licensing efforts on any other geologic media, world-wide analyses of various geologies have significantly advanced the understanding of thermal conductivity and corrosion processes in a wide range of geologic formations. Data is widely available that summarize these critical aspects of disposal package and canister design. Much of that work is summarized in reports generated by the National Laboratories in the United States under funding provided from the Department of Energy.[21, 22] The data presented in these reports suggests that the aspect of canister design that is most important for near term repository performance is thermal output. Thermal issues appear to dominate the performance of all repository geologies (and therefore canister designs) for the first several thousand years. Knowing the thermal limits for each geology type allows an initial sorting of viable canister sizes and cooling times required for SNF prior to disposal in each geologic media.

Long term performance of a disposal package, on the other hand, is determined more by corrosion performance and criticality prevention. In the Yucca Mountain license application, no corrosion protection credit was assigned to the TAD canister in the disposal configuration. All of the corrosion credit was provided to the waste package that was made of highly corrosion resistant INCONEL (alloy 22). Regardless of the geologic media selected for future repositories in the US, a similar assumption could be made regarding canister and/or overpack design requirements.

If the long term corrosion performance requirements were to be met by a disposal overpack or waste package, and the canister only had to deal with thermal and criticality issues in the

[20] In this discussion, we use the term "license" to refer to either 10 CFR 71 or 10 CFR 72 licensing or certification.
[21] SAND2011-6202, Generic Repository Design Concepts and Thermal Analysis (FY11)
[22] FCRD-UFD-2012-000219 Rev. 2, Repository Reference Disposal Concepts and Thermal Load Management Analysis November 2012

disposal environment, there is a path forward for design of STAD canister systems prior to development of new repository licensing requirements. That approach would be to design three canister sizes (small, medium and large) to meet the deterministic requirements for transportation and storage. Designing and licensing a small (4 PWR/9 BWR assemblies), a medium (12 PWR/32 BWR assembles), and a large (24 PWR/68 BWR assemblies) canister would bound the acceptable ranges of thermal loading for any repository geology that is selected. These initial STAD canister designs would also be engineered to meet the worst case criticality constraints for ultimate disposal. Early enveloping design and licensing these three STAD canister sizes for transport and storage would shorten the time required to provide STAD canisters once a repository is selected. Doing the transport and storage portion of the design and licensing work in advance would shave 2-3 years off of the schedule to provide STAD canisters for packaging or re-packaging UNF. Once the geology of the host repository is identified, the appropriate sized canister for the allowable heat loading would be known, a suitable overpack material could be identified to provide the required corrosion performance, and licensing for disposal could be contemplated as an add-on. To minimize the investment in DPCs that cannot be used in any repository, DOE could pursue fabrication and loading of the appropriately sized STAD canister as soon as a repository site is selected. This work would be done at risk prior to licensing of the STAD canister for disposal.

The use of conservative STAD canister designs would minimize the disposal licensing risk, particularly since the STAD canister is likely to be a minor component in the overall engineered barrier system. To speed STAD canister development, DOE could submit topical reports on an integrated approach to meeting disposal and storage requirements for the selected STAD canister size.

There are a number of specific issues that DOE could consider for early engagement with the NRC. These types of issues could be pursued before submitting formal applications for STAD canister certificate approval and for a license application for a CISF. This proposed engagement could be undertaken through the development and submission of Topical Reports (TRs) and through the development and use of appropriate administrative processes such as backfit considerations.[23] The advantages, which would arise, stem from the early settlement of issues that could slow the orderly progress of STAD canister or CISF certification and licensing. Here are a few examples of the types of issues that could be addressed; this list is illustrative, but not exhaustive:

- Lengthy Periods of UNF Storage: The date by which a repository could receive and possess UNF is uncertain and many decades distant. In the meantime, the 10 CFR 71 and 72 regulations can be expected to evolve. One example involves the International Atomic Energy Agency (IAEA) regulatory update cycle, which occurs approximately every five years. As the IAEA completes a cycle, DOE could engage the NRC and the US Department of Transport (DOT) to accommodate consideration of an IAEA change. One possible means of administratively addressing this type of issue could be to supplement the NRC/DOT Memorandum of Understanding (MOU) that pertains to interactions between these two agencies.[24]

[23] 10 CFR 72 contains a backfit provision in 10 CFR 72.62. 10 CFR 71 does not contain a backfit provision.
[24] The NRC/DOT MOU can be found at 44 FR 38690, July 2, 1979.

- Dry Storage System Long-Term Degradation: Another example involves the studies underway to address potential design issues involving extended periods of dry UNF storage. These types of issues include storage of high burnup fuel, canister and concrete degradation mechanisms, and canister leak-tightness for extended periods. Many of these issues could be addressed and resolved using the submission and approval of individual TRs. Such a resolution would be particularly important in the event that NRC were to decide on the necessity of physical inspection programs for the dry storage systems or how to handle certification renewals or license extensions.
- STAD Canister Interface Issues: As the STAD canister and CSIF designs evolve, design issues are likely to arise, which may not be fully addressed in the existing regulatory frameworks of 10 CFR 71, 10 CFR 72, and future repository regulations. Section 4.2 of this report mentions some of these types of design and licensing issues which will likely change over time. Among those issues listed there are: cladding integrity; control of heavy loads; safety and quality classification of structures, systems, and components; and continuity and protection of essential support systems, such as electric power, compressed air, and cooling water. Another issue that would be helpful to address and resolve involves the so-called moderator exclusion requirements of 10 CFR 71.[25]
- Repository Interface Issues: There are particular technical issues that could apply certain repository disposability considerations. Examples of these types of issues include maintenance of subcriticality in the repository, canister corrosion, near field chemistry behavior, repository retrieval issues, and maintenance and transfer conditions once a STAD arrives at a repository site.

There are a number of advantages that accrue from the early consideration of these types of issues. Approved TRs can be referenced in licensing and certificate applications as already-resolved issues. Resolution of issues that may need supporting R&D can be undertaken early, before they would become a critical path in a certification or licensing process. Early resolution of these issues increases the likelihood that the regulatory framework for STAD canister and CISF approval can provide reasonable assurance for both safe long-term storage and subsequent safe transportation to a repository.

Depending on progress being made with the selection of a host site for a repository, DOE could choose to wait for the repository selection prior to beginning fabrication of the appropriately sized STAD canister, or it could proceed with fabrication of the smallest STAD canister design (4 PWR / 9 BWR assemblies) right away. The smallest STAD canister configuration constrains heat load sufficiently to be universally acceptable in all geologies from a thermal perspective, although using a small canister design in a repository environment that could handle larger heat loads would likely not be economically favorable. Earlier fabrication of the smallest STAD canister would support the earliest possible transition away from canisters that are only approved for transport and storage to a system that conceivably would qualify for storage, transport and disposal. Modeling of the costs, benefits and risks associated with early adoption of the smallest STAD canister should be performed once the schedules for selecting a repository host site are more definitive.

[25] See 10 CFR 71.55 (b).

Like Yucca Mountain, any future repository license application is likely to be conservative when initially submitted. Once licensed for initial operations, refinements to the repository design might be pursued that would enhance operational safety and cost benefits. Continuous advancements in modeling, in materials science and in other aspects of repository design should be incorporated through license amendments during the repository's operational life. Evolutionary improvements to the STAD canister design should be contemplated as changes to the initial license are proposed.

Another licensing question involves the licensing requirements for a CISF that would involve considerable fuel handling operations (like the Consolidated Storage Facility recommended in the ES team's Task Order 11 report). The Private Fuel Storage (PFS) facility licensed for consolidated storage in Utah only involved handling of canisters of fuel and no handling of individual fuel assemblies. CISF licensing will likely include more complex fuel handling capabilities and approach to some degree the features intended for the pre-closure facilities at Yucca Mountain.

As part of our efforts to better understand the current NRC thinking regarding licensing of transportation, storage and disposal of used fuel we have had informal conversations with NRC management and staff. In general most staff are comfortable with licensing a storage facility that only includes a storage pad and canister handling capability. Expanding this approach to a centralized facility storing more than one system would not seem to be too difficult. There are some transportation issues that will need to be addressed. There are also some National Environmental Policy Act (NEPA) issues that will have to be evaluated especially if an expanded facility is expected at a later time. The NRC will need to know what DOE thinking is on the timing and approach to handling different fuel configurations to consider NEPA issues, and a determination of who the lead or commenting agency should be for purposes of conducting the NEPA reviews.

To explore the licensing requirements for a CISF with the expanded mission of cutting open existing DPCs and repacking bare UNF into STAD canisters, we met with an NRC representative from the Thermal and Containment Branch in the NRC's Office of Nuclear Material Safety and Safeguards, Division of Spent Fuel Storage and Transportation, to discuss their views on the licensing construct required. In this meeting, the NRC suggested that a cursory reading of DOE's strategic response to the BRC recommendations clearly involved two distinct facilities that may require different licensing bases. As described in the DOE UNF and High Level Waste (HLW) strategy document, the Pilot Interim Storage Facility (PISF) seemed to be analogous to the current ISFSIs the NRC has licensed at PFS and at operating and shutdown plant sites. A PISF does not appear to have any additional UNF handling requirements, and would seem to be licensable under the current 10 CFR 72 criteria. The NRC suggested that the current 10 CFR 72 rules may not, however, be sufficient for a full CISF with a significant UNF repackaging mission using either a pool or a hot cell. Even the licensing basis for UNF storage in a pool at the GE Morris site does not seem to be sufficient for the anticipated scope of fuel handling at the full CISF that DOE is considering. The NRC also suggested that this kind of facility does not seem to be explicitly covered under the rules in 10 CFR 70 either.

The NRC staff's informally expressed reservations notwithstanding, NRC regulation of a comprehensive CISF design that included pools, hot cells, canister repackaging, and handling of heavy loads seems to be within their grasp. The Yucca Mountain surface facility design has these types of design capabilities, and the NRC's review of these capabilities indicated DOE's

descriptions of systems, structures and components (SSCs), equipment, and process activities were reasonable.[26] The General Design Criteria (GDCs) in 10 CFR 72, Subpart F describes the fundamental safety considerations that would apply to a comprehensive CISF. Such a facility would contain design features that are commonly considered in NRC licensing reviews. To name but a few examples:

- Cascade ventilation
- High radiation area access interlocks
- Criticality safety
- Consideration of aspects of fuel cladding integrity: burnup, exposure to air, known damage
- Condition of old, high burn-up fuel re-packaging: special handling, ALARA, off-normal and accident response (drops)
- On and off-site dose for both normal and accident conditions
- Fire protection
- Protection from severe natural phenomena
- Control of heavy loads
- Cooling systems, both water and air, which are important to safety
- Continuity of electric power and other essential service functions, such as compressed air
- Safety and quality classification of structures, systems, and components

The NRC's detailed experience base to address some of these types of considerations extends beyond that which is typically employed in 10 CFR 71 and 72 licensing. To take one example of heavy loads, two NUREGs address this issue, and the focus of these NUREGs[27] involves the design of single-failure-proof cranes and heavy load paths, particularly in the areas around the UNF pools. The NRC staff could easily adopt and adapt this type of supplemental guidance to review a CISF license application. A straightforward way to do this would be to develop CISF specific licensing guidance documents: 1) a Standard Format and Content Regulatory Guide; 2) a Standard Review Plan for a CISF, and 3) Interim Staff Guidance on discrete repackaging technical issues. These documents would describe the detailed regulatory expectations that would pertain to a CISF and would reference and describe how supplemental guidance would apply. When preparing the contents of these documents, the NRC staff may see a need for a rulemaking. When the NRC issues the 10 CFR 71 and 72 COCs for the STAD canisters, the

[26] Technical Evaluation Report on the Content of the U.S. Department of Energy's Yucca Mountain Repository License Application – Pre-closure Volume: Repository Safety Before Permanent Closure (NUREG-2108)

[27] NUREG-0554, Single Failure Proof Cranes for Nuclear Power Plants; NUREG-0612, Control of Heavy Loads at Nuclear Power Plants: Resolution of Generic Technical Activity A-36; and ASME Code NOG-1, Rules for Construction of Overhead and Gantry Cranes (Top Running Bridge, Multiple Girder)

NRC can be expected to issue Conditions of Use and Technical Specifications, which would address STAD-specific requirements.

Legislation may be required to authorize use of Nuclear Waste Funds for development of a site specific CISF (Note. Per the NWPA, construction of such a facility may not begin until the NRC has issued a license for the construction of a repository). Generic non-site specific licensing can, however, be done under current law. Legislation may also outline expectations for the lead agency in NEPA actions for a CISF and could provide clarification for licensing expectations. Additional regulatory guidance will be needed following any such legislation. If new licensing requirements are legislated, that would lead to new rulemaking and several years of delay to any licensing process to conclude the rulemaking process.
We recommend DOE consider a series of meetings with the NRC to explore the limits of what can be done under current 10 CFR 72 licensing and what supplemental criteria can be added to address the CISF mission. The NRC is already discussing licensing needs for a combination of future storage, transportation and disposal needs. A new working group on these issues may be a good approach. The feedback from the recent NRC request for comments on potential revisions to 10 CFR 71 and 10 CFR 72 will be a good starting point for more detailed discussions between the applicant and the regulator.

4.3 Level of Effort Needed for Detailed Design Leading to a Viable License Application

The STAD canister concepts have been developed to provide efficiency and minimize operational challenges considering program flexibility as a base criterion. System configurations include loading and storing the STAD canister at the CISF. Loading operations may be from a DPC, Transportable Storage Cask (TSC) or a bare UNF transport cask, or, in some scenarios, STAD canisters may be loaded at reactor sites and transported to the CISF for storage. Once loaded at the CISF the STAD canister will be placed into storage at the CISF or transported to the repository. With this operational configuration the STAD canister licensing activities will include 10 CFR 72 storage at the CISF and potential packaging functions, operational considerations associated with packaging fuel into the STAD canister at reactor sites under 10 CFR 50, 10 CFR 71 transport of the STAD canister from the CISF to the repository and an equivalent to 10 CFR 63 covering disposal of the STAD canister. At this time the Code of Federal Regulation does not exist for the different geologic repositories being considered as well as the specific regulations or regulatory guidance that may be needed for CISF repackaging operations. Therefore the estimated level of effort needed for detailed design leading to a viable license application is based on previous Yucca Mountain experience including TAD canister development.

TAD canister development was performed as a two-phase project split into concept and final design/licensing application activities. The concept phase provided first level sizing calculations and design drawings for the integrated system addressing repository (10 CFR 63), transport (10 CFR 71) and storage (10 CFR 72) licensing analyses. Phase 2 consisted of detailed licensing design calculations and preparation and submittal of the three different SAR applications to the NRC. After Safety Analysis Report (SAR) submittal to the NRC the TAD canister projects were terminated.

Table 4-2 shows the relative level of effort for designing and licensing the basket/canister portion of a used fuel containment system versus the effort required to design and license the cask/overpack portion. The split in the level of effort changes depending on whether the effort is focused on the requirements for disposal, transport or storage. The splits in the efforts described in Table 4-2 are estimated from historic experience on projects for the three license types, although only the Yucca Mountain TAD project involved all three licensing efforts for a single container.

Table 4-2. Estimated Relative Levels of Effort for Design and Licensing STAD Canister System Components

STAD Canister System Components	Relative Level of Effort		
	10 CFR 63	10 CFR 71	10 CFR 72
Basket / Canister	70%	40%	80%
Cask / Overpack	30%	60%	20%

As described in Section 4.1, the STAD canister design scopes include small, medium and large canisters for both PWR and BWR fuel content. Basket configurations consider egg-crate and flux trap/stacked disk designs. Storage overpack configurations permit one base storage design accepting 3 internal configurations – either 1 support system for cluster of 4 small canisters, 1 medium canister, or 1 large canister. Similarly, there is a transport cask configuration that would service a similar STAD canister configuration accepting either 4 small, 1 medium, or 1 large STAD canister configuration.

In consideration of the different system configurations and three (3) different SAR licensing efforts, the projected cost for licensing the small, medium, and large STAD canister designs, i.e. the Cost Optimization option licensing approach described in Section 4.4, is $25.9 million in 2013 dollars. Projection of this cost for the design and licensing activities performed in the 2024 time frame is $ 39.8 million in year of expenditure dollars assuming a 4% inflation rate. Projection of a single design license, i.e. the Baseline licensing approach, initiated after the repository geology is defined reduces the total cost of the STAD canister licensing effort. Considering the Baseline project's configuration the estimated licensing effort is $ 12.8 million in 2013 dollars. Escalating to 2028 (assumes a period of two years for the definition of the required STAD canister size, after the repository site is selected in 2026) results in a projected cost of $ 23.1 million in year of expenditure dollars assuming a 4% inflation rate. The difference in cost for the Baseline Case and the Cost Optimization option is $ 13.1 million in design and licensing activities (in 2013 dollars). Although the cost for licensing the three different STAD canister configurations in the 2024 time frame is higher than the cost for licensing one system configuration in 2028, significant total project cost savings are achieved by initializing fabrication of hardware and loading of STAD canister systems approximately five years earlier than the Baseline project scoping.

4.3.1 Storage and Transport Licensing

The proposed STAD canister and overpack configurations are envisioned to be licensed through the existing 10 CFR 71, and 10 CFR 72 Subpart L-Approval of Spent Fuel Storage Casks regulations, or a future harmonized regulation that may be issued prior to the implementation of

the intended system licensing activities. If there were to be a future integrated regulation it would be expected to contain technical design and operational requirements similar to those currently defined in the existing regulation and respective Standard Review Plans, NUREGs 1536[28], 1567[29], and 1617[30].

The STAD canister system relies on the canister as the confinement boundary and on the transfer and storage overpacks as physical protection, handling, heat rejection and biological shield for the STAD canister for storage applications. Licensing for STAD canister transportation is envisioned to adopt current industry regulatory basis and practice, limiting the transport overpack as the licensed containment boundary for the purposes of demonstrating confinement per 10 CFR 71. The STAD canister shell boundary will permit a defense-in-depth configuration; a design feature that could provide a basis for moderator exclusion as a technical position for normal condition evaluation and potential burnup credit for hypothetical accident criteria.

4.3.2 Additional CISF and Repository Licensing Considerations

The scope of activities addressed in this section relative to the STAD canister licensing level has focused on the STAD canisters and storage and transport overpacks. CISF and repository operations and specific facility licensing have not been discussed. STAD canister design could incorporate repository interface requirements to the extent such requirements become defined.

4.4 Timeline for STAD Canister Development through Repository Operations

As previously noted, in January of 2013, DOE published its response to recommendations made by the Blue Ribbon Commission on America's Nuclear Future. Titled the "Strategy for the Management and Disposal of Used Nuclear Fuel and High-Level Radioactive Waste", DOE's response provides clear expectations for key elements of its waste management strategy. More importantly, it establishes the timing for start-up of each major waste management facility. There were few details in the strategy document, but the Team used DOE's milestone dates as its starting point for a more detailed STAD canister development schedule, placed in the context of other waste management activities.

Five key dates were provided in the DOE Strategy Document. These are:

- Initial operations of a PISF for the used fuel from shutdown plant sites in 2021;
- Initial operation of a CISF with the capability to store, repackage and effectively manage larger quantities of used fuel beginning in 2025;
- Selection of a repository site by 2026;
- Design and licensing of a geologic repository for UNF and HLW disposition by 2042; and,
- Initial operation of a repository in 2048.

Our analyses were guided by the following assumptions about how current elements of the system would work in the future:

[28] NUREG 1536. Standard Review Plan for Dry Cask Storage Systems.
[29] NUREG 1567. Standard Review Plan for Spent Fuel Dry Storage Facilities
[30] NUREG 1617. Standard Review Plan for Transportation Packages for Spent Nuclear Fuel

- Operating nuclear power plants will not wish, and thus will not be required, to package UNF into any canister that requires more labor and takes more time per ton of fuel collected than the dry storage canister systems currently being used;
- No repackaging of existing dry storage systems using welded canisters will be done at utility sites. All of these canisters will be shipped elsewhere for repackaging;
- Shutdown sites that still have pools and other plant capabilities may be willing to package bare UNF from pools into STAD canisters;
- Shutdown sites that still have pools and other plant capabilities may be willing to re-package UNF from bolted lid dry storage systems into STAD canisters for shipment to a CISF or repository;
- The cost of designing and licensing STAD canisters is small compared with the cost of the overall waste management system and the cost of delays to final waste disposition;
- Design and licensing of any new canister based STAD canister system will take 3+ years, and initial fabrication lead time will be 2 years;

To start the analytical process, we populated a timeline with the dates provided in DOE's used fuel management strategy document. Those dates are shown in Figure 4-5 as yellow stars with a red outline.

Figure 4-5. Major Milestones from the DOE Strategic Response to the BRC Recommendations

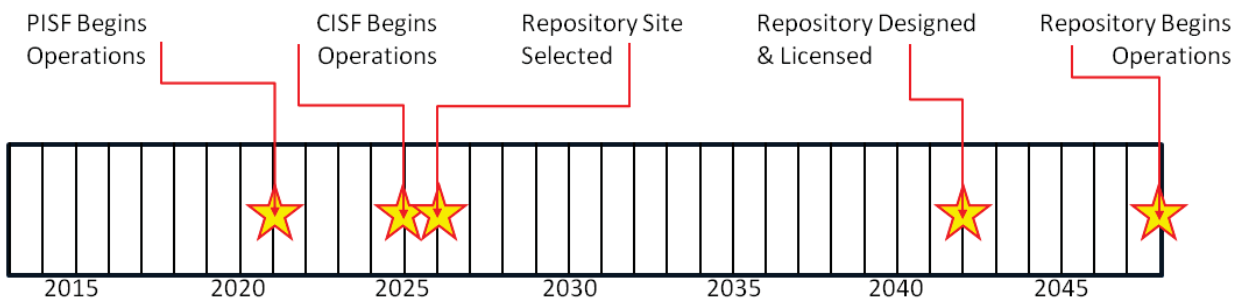

We then began filling in the missing details based on standard project risk management practices and the design and licensing process used to select the canister and disposal package combination for Yucca Mountain. As we started the process of filling in the details, we realized that several different scenarios were possible depending on assumptions regarding priorities, about the relationships between activities on the project network diagram and about project schedule and scope risk tolerance. We wound up developing two different timing scenarios. One was based on standard assumptions on priorities and project risk management approaches. A second set of activity relationships used different priorities and project scope and schedule risk mitigation assumptions, producing a dramatically different set of cost and schedule results. Both scenarios are presented in this section. It will be important for DOE to establish clear priorities and project scope and schedule risk mitigation constraints before settling on any one schedule for STAD canister development. For this report, the two STAD canister development schedules are referred to as the **Baseline Case**, and the **Cost Optimized Case**. The dates in Figure 4-5 were used in both the Baseline and the Cost Optimized schedule analyses we conducted.

Baseline STAD Canister Case: For the Baseline Case, we assumed DOE to have a low tolerance for project scope and schedule risk associated with pursuit of canister designs before all repository requirements are understood. This results in a requirement to accept higher life cycle waste management costs. In this scenario, the selection of a STAD canister size is delayed until the final repository geology, its thermal capacity, and the geochemistry were all defined. This site specific approach minimizes the project scope risk (i.e. the risk of having to redesign the STAD canister later) associated with developing a disposal canister design until before the performance requirements imposed by the geology are well defined. The Baseline approach also assumes that construction of a pool for repackaging at the CISF would not commence until needed to provide a queue of waste packages destined for the repository. Delaying construction of the pool keeps the capital and operating costs of the CISF as low as possible until this more expensive asset is truly needed to supply a backlog of STAD canisters for emplacement in the repository's engineered barrier system. Figure 4.6 adds some of these additional details for the Baseline approach as green diamonds with blue borders.

Figure 4-6. Baseline Case STAD Canister Development Schedule with UNF Repackaging Timeline

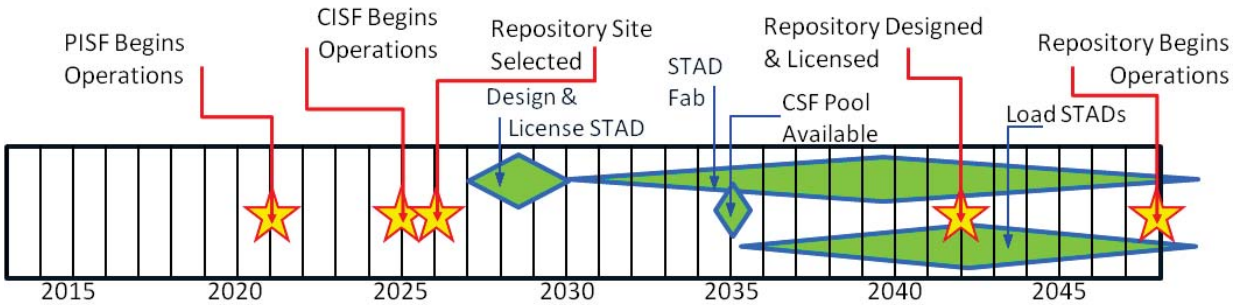

The green diamonds that extend beyond the end of the schedule box indicate activities that will continue beyond the time frame illustrated. Even though this approach minimizes project risk, it is still not without its own set of project schedule and waste management program life cycle cost risks. The only requirements for a disposal canister and its waste package presently available are the site specific criteria established for the Yucca Mountain repository. The Environmental Protection Agency (EPA) has not established public health and safety standards for any other UNF repository setting, and the NRC has not developed licensing processes for any other specific UNF repository site or disposal approach other than Yucca Mountain. The schedule for STAD canister development in Figure 4-6 presumes that DOE would be willing to pursue development of a STAD canister even if explicit disposal standards and licensing guidelines have not yet been promulgated. An approach that might allow design progress without a full regulatory context is to develop a STAD canister that can meet the generic thermal and corrosion constraints of various host geologies, and design for worst case criticality management. DOE could pursue development of a canister that meets these bounding requirements while completing the licensing process to meet the well-defined requirements for transportation and storage in 10 CFR 71 and 10 CFR 72, respectively. Eventual disposal requirements could be met through careful integration of the STAD canister design with the waste package and other elements of the engineered barrier system once the repository standards and licensing requirements were established. This could offer a reasonable approach to maintaining schedules while managing the project scope and schedule risks of potentially having to redesign the STAD

canister after the licensing requirements are fully defined. If DOE does not wish to pursue STAD canister development until EPA issues new site specific radiation standards or NRC issues site specific repository licensing requirements, it is highly unlikely that DOE will be able to maintain the overall schedule outlined in their strategic response to the BRC recommendations.

In the case of Yucca Mountain, there was a long delay between Congressional designation of Yucca Mountain as the only site for evaluation through the 1987 Amendments to the NWPA, and the issuance of new site-specific licensing requirements, 10 CFR 63, and radiation standards, 40 CFR 197, and final selection of the combined canister and disposal package designs. In the years since then, additional data has been collected on all of the viable repository geology types. That generic analysis of the thermal capacity and geochemistry of various geologic formations provides a better framework for STAD canister selection once a final host site is selected than was the case when Yucca Mountain was chosen. Building on the current knowledge base and the schedule risk mitigation approach of a disposal design based on conservative heat and chemistry requirements, the STAD canister design could be started sometime in the 2 year period after a new host site is selected in 2026 (See Figure 4-6).

The timing for STAD canister selection and design in our Baseline Case was primarily driven by the ideal timing for having an operating pool for repacking operations. As shown in Figure 4-7, we had to stretch the definition of what operability of the full CISF meant. DOE set a date of 2025 as the time when a full CISF would be operating. We defined that full operation as the ability to receive and store large amounts of UNF in any configuration it was shipped in. This would include TSCs, DPCs in transport overpacks, and bare UNF cask shipments by truck and rail. It also included the ability to place any canister configuration provided into dry storage. The construction and operation of a pool was delayed in the Baseline Case as long as possible. As mentioned above, delaying construction and operation of the pool defers capital costs. Careful planning will allow the capital costs of a full CISF to be spread over a long time horizon, thereby avoiding funding spikes that may be difficult to support. Spreading capital expenditures over more years also normalizes the manning required to construct the CISF, and that has other benefits for a host community. Finally, delaying construction of the pool as long as possible also reduces the annual operating costs of the storage facility significantly. In a joint report prepared by the Harvard University Project on Managing the Atom and the University of Tokyo Project on Sociotechnics of Nuclear Energy[31], the costs for pool storage are as much as 5.9 times higher than the costs for a dry storage facility. This cost difference is most pronounced during the steady state storage period between the last fuel receipts and the first shipments from storage to final disposition. Simply maintaining the chemistry, temperature and other licensing conditions for a spent fuel pool (even when no UNF is being stored in it) is very expensive and time consuming.

In our Baseline Case, developing a backlog of UNF stored at the CISF in a disposable configuration was a priority. Our analysis indicated that using the CISF as the gateway to the repository would shorten the schedule for final disposition of the UNF by packaging fuel for disposal before the repository becomes operational. This would allow the repository to begin

[31] "Interim Storage of Spent Nuclear Fuel; A Safe, Flexible, and Cost-Effective Near-Term Approach to Spent Fuel Management". A Joint Report from the Harvard University Project on Managing the Atom and the University of Tokyo Project on Sociotechnics of Nuclear Energy. Published in 2001.

emplacement of fuel at start-up rather than having to begin operations with a lengthy repackaging effort. In addition, having the opportunity to create a backlog of UNF stored in STAD canisters prior to the repository opening could ensure a steady feed of UNF ready for emplacement through 2074. Other adjustments to the standard contract that would benefit both the utilities and DOE could ensure disposal-ready STAD canisters continue to support repository operations indefinitely without expanding the pool repackaging capacity of the CISF. These changes would support repository operations even if emplacement rates exceed 3,000 MTHM/yr. The details of this changed approach are discussed as part of the **Cost Optimized Case** for STAD canister development.

Figure 4-7. Baseline Case STAD Canister Development Schedule with Additional Milestones Tied to Assumptions Added

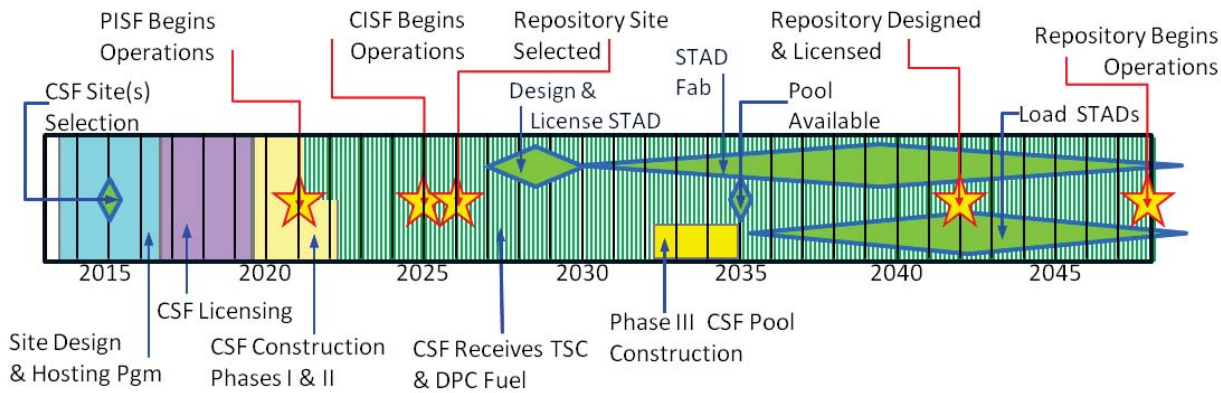

Figure 4-7 fills in additional schedule blanks in the Baseline Case STAD canister development scenario. This figure adds the schedule and duration for designing and licensing the consolidated storage facility, construction of each phase of CISF capability and the start of UNF shipments from the utilities. Each of these steps is aggressively scheduled, and requires close coordination with other federal agencies and/or local government entities with a role in establishing standards, performing licensing reviews or issuing permits. Of particular concern is the absence of a regulatory regime that a CISF with a large fuel repacking mission would be licensed under. This is discussed in detail in Section 4.2.

This Baseline Case schedule for development of the STAD canisters supports all of the dates in DOE's strategic response to the BRC recommendations. It is aggressive, but achievable, and the details we recommend include a viable risk mitigation strategy for preserving the scope and schedule of waste consolidation projects. We chose the best options for minimizing sunk investment costs for STAD canister designs that would not be useful when the repository finally opened. The downside of this Baseline Case approach is that it presumes utilities will continue to place UNF into the current generation of DPCs.

DPCs are licensed for both storage and transportation, but face many obstacles for direct disposal. The latest generation of DPCs have the capacity to store and transport 37 PWR and up to 89 BWR assemblies. These canisters are licensed to store UNF with heat loads above 35 kilowatts. In the transport configuration, they are licensed for shipment of used fuel with heat loads of approximately 24 kilowatts. Although serious efforts are underway to find options to directly dispose some of these DPCs, it seems unlikely that any of the current generation of high

burnup fuel stored in high capacity canisters will ever be eligible for direct disposal. Continuing to load UNF into these large canisters will sink a considerable amount of money into a configuration that likely will not support direct disposition of the fuel.

To illustrate this, if all of the fuel currently in pool storage (~ 55,000 MTHM) was to be placed into high capacity DPCs, the sunk costs just for the canisters would be close to $3 billion! When the costs for loading operations, eventual unloading and repackaging and other handling costs are considered, the amount of resources applied to a temporary solution that has no long-term benefit is very high indeed. Figure 4-8 provides a look at the high costs of continuing on the waste management path we are currently on. The costs shown in Figure 4-8 only include the cost of procuring the DPC canisters, and do not include the cost of repackaging operations, or the cost of ultimately disposing of the DPC carcasses after the fuel is transferred to a STAD canister, if the DPC cannot be directly disposed in a repository.

Figure 4-8. The Results of Continuing with the Current Process for Storing UNF at Utilities

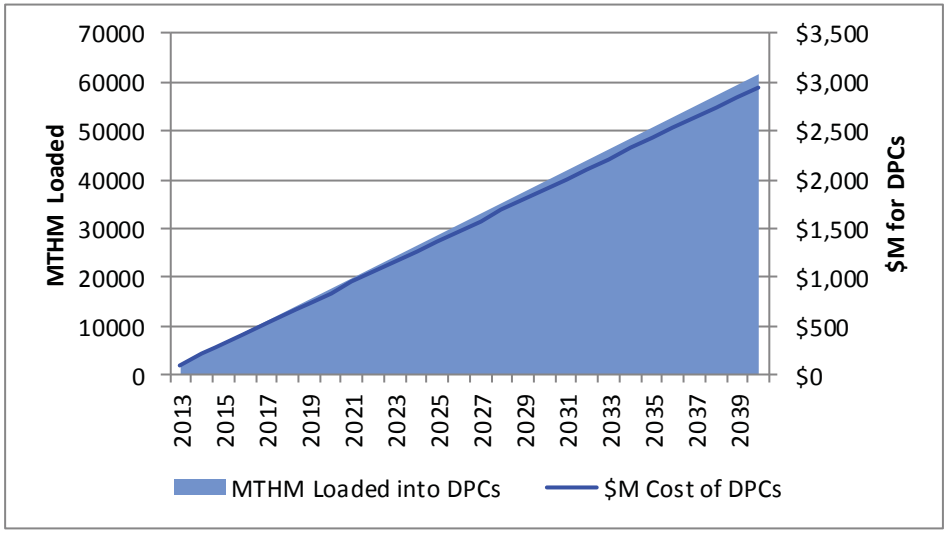

The high costs and inefficiencies of continuing down the current path led the Team to develop an alternative approach to interim management of UNF pending the opening of a repository. Because of the potential for significant cost savings associated with this approach, we called this the **Cost Optimized STAD Canister Case,** although our nickname for this option is the "Aha Scenario".

Cost Optimized STAD Canister Case: In developing alternative approaches to STAD canister implementation schedules, we started with brainstorming sessions at the Phase 3 workshop. The rough ideas developed there were then refined with the TSM. We also analyzed possible schedule options identified by the overall UNF Waste Management Network Diagrams. Figure 4-9 shows a project network diagram for UNF Waste Management, with all major groups of activities identified. We conducted forward and backward analyses of schedule float for the key project activities. This identified the groups of activities with the most potential schedule float. We then looked at how the ideas developed in the Workshop would influence the timing of activities with the most float in the network diagram. The schedules for milestones in DOE's strategic response to the BRC recommendations were considered inviolate, and no float was assigned to these dates. That constrained the ability to adjust some predecessor and successor

tasks. Still, the network diagram opened up some intriguing opportunities for schedule and cost improvement.

The most schedule float was available in the timing for implementation of the pool for repackaging operations. Although the Baseline Case schedule suggested deferring pool availability until 2035, when it would be needed for repackaging DPCs into STAD canisters, any hope of reducing the wasted investment in large DPCs requires packaging bare UNF into STAD canisters as soon as possible. Using the float identified in the network diagram, we went back to the more detailed schedule overlay and looked for ways to make packaging bare UNF into STAD canisters begin much sooner than was recommended by the Baseline Case scenario. Four pre-requisite activities stood out as key to making this possible.

1. Design and licensing of all three STAD canister sizes (a small, medium and a large) before the repository host site is selected. The current large DPCs may become a viable extra large STAD canister in the future, but that will take considerable work by the National Laboratories. So a STAD canister in that size range was not considered;
2. Earlier construction of the pool and wet repackaging capability at the CISF;
3. Contract negotiations with the utilities to support packaging bare UNF into STAD canisters at reactor sites.
4. Design and licensing of dry storage and transportation systems that can accommodate UNF in a STAD canister configuration.

Figure 4-9. Waste Management Network Diagram and Identification of Schedule Float

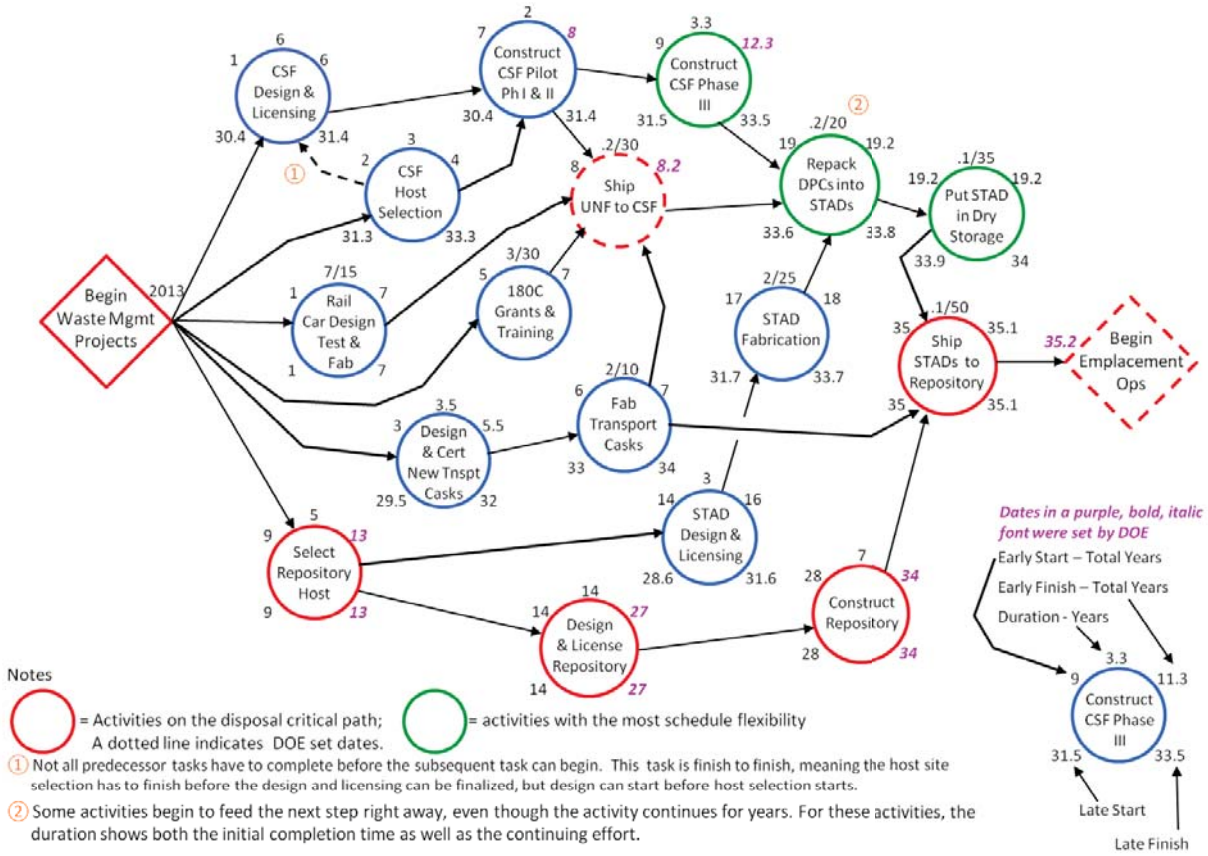

The potential benefits of accelerating the shift from DPCs to STAD canisters are significant. A TSM analysis of shifting to STAD canister loading as early as possible shows the savings just from not purchasing DPC hardware will be over $500M. This savings is shown in Figure 4-10, and is explained further in the following paragraphs.

Figure 4-10. The Potential Hardware Cost Savings just from Accelerating the Change from DPCs to STAD Canisters

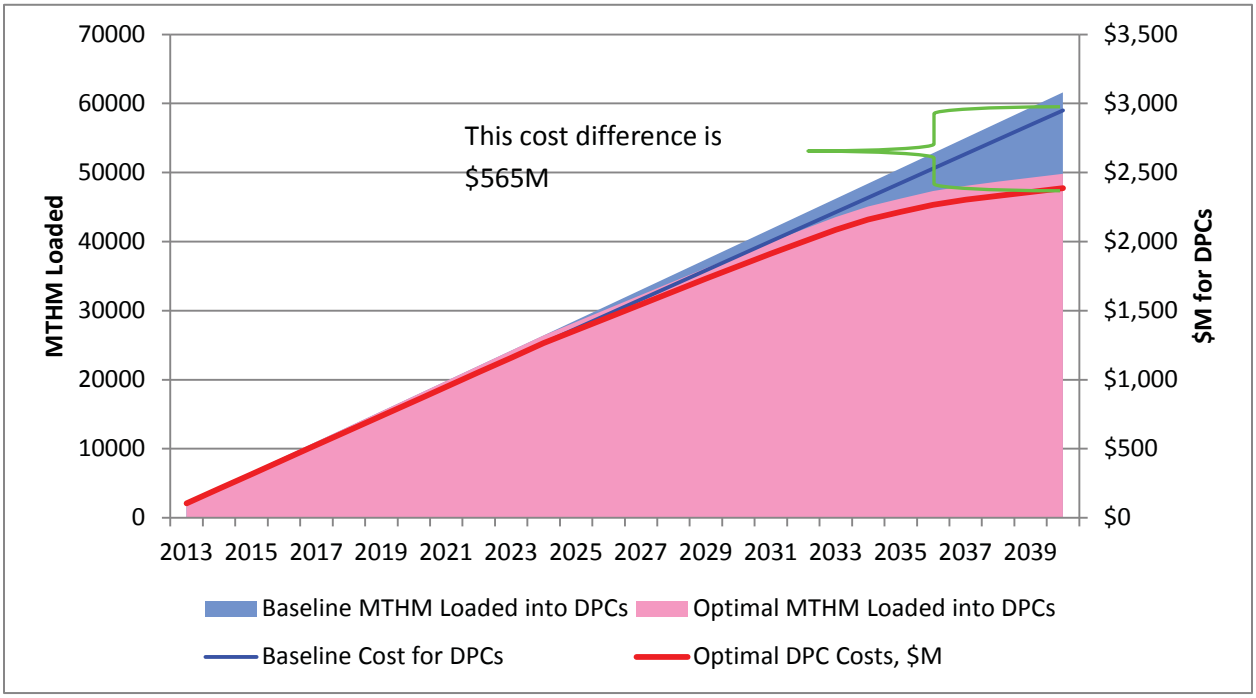

In the Baseline case, the STAD canister configuration was not established until the repository site was selected. This started a six year process to design, license and fabricate the first STAD canisters for use. One way to shave 3-4 years from the timeline is to design multiple STAD canister configurations prior to selection of the repository. Generic work could begin on small (4 PWR/9 BWR); medium (12 PWR/32 BWR) and large (24 PWR/ 68 BWR or 21 PWR/44 BWR) STAD canister designs in parallel. These designs should be licensed for storage and transport and have features that could support subsequent licensing for disposal once a repository licensing framework is established. Fabrication of a STAD canister design appropriately sized for the selected geology would begin as soon as the repository host site was selected and the constraints of the geology were established. The counterpoint for the significant cost savings is that DOE would have to accept the project scope and schedule risk of adding disposal licensing to the STAD canister designs after the initial designs for storage and transportation were completed and STAD canisters were fabricated. With conservative enveloping design features for storage and transport, and with careful design interface with the repository's integrated engineered barrier system, this could be a relatively straight forward addition to the canister license, but the project scope risk of not being able to add disposal certification later has to be considered (i.e. if the STAD canisters are found not to be licensable for disposal after they have been licensed for storage and transport, considerable rework would be required). Designing and licensing 3 different STAD canister sizes will be expensive, but those costs are more than offset by the savings from reducing the number of DPCs that are purchased, loaded and eventually disposed

of. As already noted in the Baseline Case section, if all of the UNF currently in pool storage were transferred to current generation DPCs, the capital cost for canisters alone will exceed $3 billion dollars! Since none of the current generation of DPC canisters are likely candidates for direct disposal that is a significant investment in hardware that does not contribute to the direct disposal commitments that have been made. The cost of designing and licensing 3 different STAD canister configurations now, and then fabricating the appropriate variant when the repository is selected will speed the transition to storage systems that are compatible with DOE's waste management decisions and is a far more cost effective approach for the waste management program.

The second pre-requisite for the Cost Optimized approach is accelerated construction of the pool at the CISF. This would void some of the Baseline Case goals for spreading out the capital costs of construction, and reducing initial CISF operating costs. Again, the potential benefits justify these changes. The initial CISF NEPA reviews will have to cover all of the functions to be performed at the full CISF, even if the pool was to be delayed, to avoid challenges of segmenting the environmental reviews, so that work will already be done irrespective of whether the Baseline or Cost Optimized approach is selected. Similarly, the CISF licensing process will have to address storage and repackaging functions to be performed at the CISF with the regulator and stakeholders, so there is no licensing benefit to delaying pool construction because that is critical to the repackaging function. Eventually, the pool will be needed for smooth functioning of the waste management system, so the full investment is ultimately required in any case. Building this capability sooner, rather than later may also add to stakeholder's confidence that progress is being made on UNF disposition.

The third pre-requisite to achieving the goals of the Cost Optimized STAD canister schedule is negotiating changed roles and responsibilities with the utilities. All of the utilities have made it very clear that they have no interest in performing waste management functions that could interfere with the safe and efficient operation of their power plants. Packaging UNF into smaller canisters is one activity that has been considered problematic for power plant operation. The smaller the storage canister size, the more loading operations, canister drying operations, canister welding operations and canister purging and backfill operations that have to be managed to move a given amount of fuel from the pools to dry storage. It is highly unlikely, therefore, that operating plants will have any interest in loading small STAD canisters because of the schedule impact that work would have on getting plants back on line after a maintenance or refueling outage.

There is a very real potential, however, for utilities to agree to two other options that could transfer bare UNF into STAD canisters sooner. The first is to negotiate with utilities to load fuel from pools at shutdown sites into smaller STAD canisters. Once the power plant is shut down, the schedule impacts of longer canister loading operations will not be as big of a concern. There may be many financial and schedule aspects of STAD canisters loading at shutdown reactor sites that would benefit DOE and the utilities. The only way to find out is to enter negotiations with utilities to determine areas of mutual interest.

The second way that utilities could contribute to early STAD canister loading involves the operating plants. Once the full CISF is operational, operating utilities may be interested in loading UNF from their spent fuel pools into bare UNF transportation casks rather than putting that UNF into high capacity dry storage casks on site. Once loaded into a transport cask, the UNF could be shipped to the CISF for pool transfer into a STAD canister prior to placement in

dry storage, or trans-shipment to the repository. The potential savings from this UNF management approach were not included in the cost savings chart shown in Figure 4-10 because the number of utilities that would be interested in bare UNF transport operations rather than deferring all off-site shipments until the plant shuts down is unknown. What is known is that more reactors are planning to shut down in advance of their original schedule. Exelon plans to close Oyster Creek in 2019; earlier than their original schedule. There have also been recent announcements that both Kewaunee and Crystal River will be shut down earlier than originally planned. It is likely that other plants will follow suit based on a range of economic and strategic decisions by their owners.

The potential for using the pools at shutdown reactors to begin loading STAD canisters is significant and plays a critical role in accelerating the transition from high capacity DPC based systems that are not likely candidates for direct disposal. Using the pools at shutdown reactor sites also increases the production rate for disposal-ready STAD canisters without building a giant pool at the CISF that can repackage DPCs fast enough to meet the emplacement schedule. Adding the potential for bare UNF shipments from the pools at operating utilities to the CISF for packaging into STAD canisters also enhances the migration to a more cost effective, and better integrated waste management system as soon as possible.

The last pre-requisite to making this transition is design and licensing of dry storage and transportation systems that will work with the smaller STAD canisters. This is another line of non-site specific work that DOE could pursue prior to any final determination of where the CISF, or the repository will be located. The basic design approach will vary depending on the size of the STAD canister. The 4 PWR/9 BWR STAD canister might be stored in a configuration similar to the HLW storage system DOE has procured for West Valley (see Figure 4-11). Other "can-in-can" systems may work for larger STAD canister sizes, both for storage and for transportation. A "revolver" style basket in a transportation cask could hold four of the smallest STAD canisters (the 4 PWR / 9 BWR cans) and still meet the railroad's Plate C size requirements for simplified rail transport. Other configurations for both storage and transportation for each of the candidate STAD canister sizes will have to be developed and be ready for production as soon as the host repository geology is selected. This pre-requisite fits in well with recommendations in the final Task Order 11 report for DOE to pursue development of new transportation casks that can handle a wide range of canister configurations. Adding STAD canisters to the list of current DPCs that would have to be accommodated would not be a significant increase in the scope of that effort.

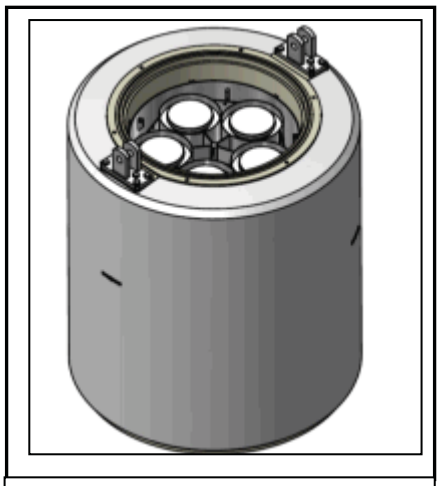

Figure 4-11. Dry Storage for HLW Canisters at West Valley

If all of these pre-requisites can be met, the early pursuit of STAD canister and universal transport cask options should be a priority. If any of the pre-requisites cannot be supported, then the savings associated with early transition from DPCs to STAD canisters is significantly diminished. The delays in developing an operating repository have created a unique opportunity to capitalize on accelerated reactor closings (e.g. Oyster Creek, Kewaunee, and Crystal River). To be realized, this opportunity requires prompt negotiation with utilities to achieve the benefits before companies establish decommissioning

schedules that would preclude their support for loading fuel from pools into STAD canisters. The final Cost Optimized Schedule for STAD canister development is shown in Figure 4-12.

Figure 4-12. Cost Optimized STAD Canister Development Schedule with Additional Milestones tied to Assumptions Added

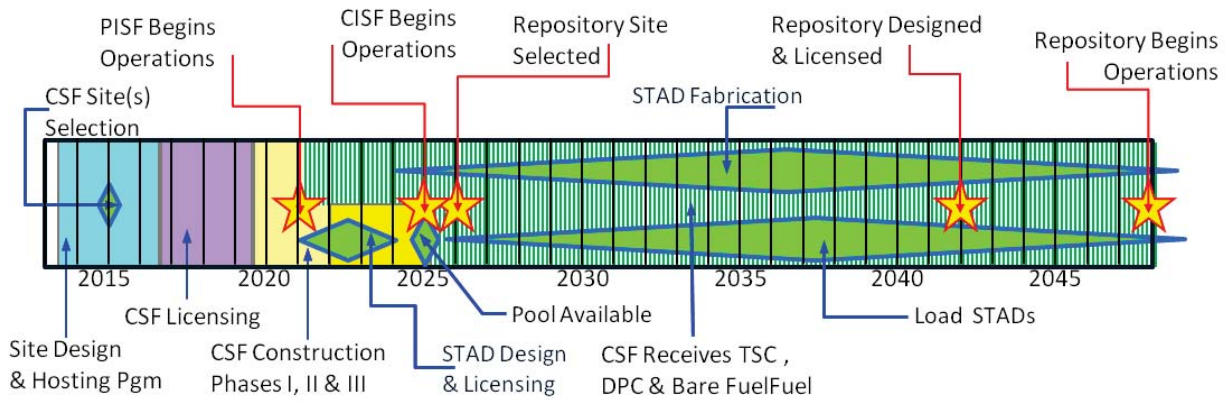

One additional option would be to design, license and fabricate a single design of STAD canister that meets the lowest common denominator for repository heat and corrosion limitations. This would likely be the very small, 4 PWR / 9 BWR STAD canister configuration fabricated in stainless steel. Pursuing a STAD canister with this size and configuration would only allow packaging operations to begin about 1 year earlier than the cost optimized approach captured in Figure 4-12. The lack of a CISF pool for packaging operations prior to 2025, and the low probability of having all of the pre-requisites in place for shutdown utilities to begin packaging much earlier than 2025 limits the benefits of this approach. If the new repository presents a geology that can accept higher heat loads, then the higher cost and lower productivity of only being able to load the smallest STAD canister will further reduce benefits to the overall waste management system. Loading a STAD canister that is smaller than required would also mean initial operation at the new repository could involve more than one STAD canister size as larger STAD canisters were introduced into the mix. Although long term plans may warrant handling more than one waste package size, introducing that mix into the initial licensing and operational plans is complicated with a limited benefit.

Overall the Baseline and Cost Optimized STAD canister development schedules we analyzed each have plusses and minuses. To help with the comparison, Figure 4-13 shows the key elements of the two options side by side. As the figure makes clear, the design and licensing of the STAD canister (at least for storage and transport) occurs much earlier in the Cost Optimized version of the schedule. The pool for repacking UNF into STAD canisters is also available much earlier in the Cost Optimized version. Neither version affects milestones DOE established in its strategic response to the BRC recommendations.

The impacts of these two options are only implied in these diagrams. In the Baseline case, the capital costs for construction of major facilities at the CISF are spread out over a much longer time frame. This would reduce annual operating costs by delaying construction of the pool until needed to prepare STAD canisters for emplacement in the repository. The downside of this approach is that utilities will continue loading UNF headed for dry storage into on-site large DPC dry storage canisters. Due to the heat load associated with their large storage capacity and the nature of their criticality controls, large DPCs, are considered, pending further evaluation, not

to be likely candidates for direct disposal. Each of these expensive canisters purchased represents a large sunk cost that does not contribute to the permanent disposition of the waste.

Figure 4-13. Comparison of Key Milestones in the Baseline and Cost Optimized STAD Canister Development Schedules

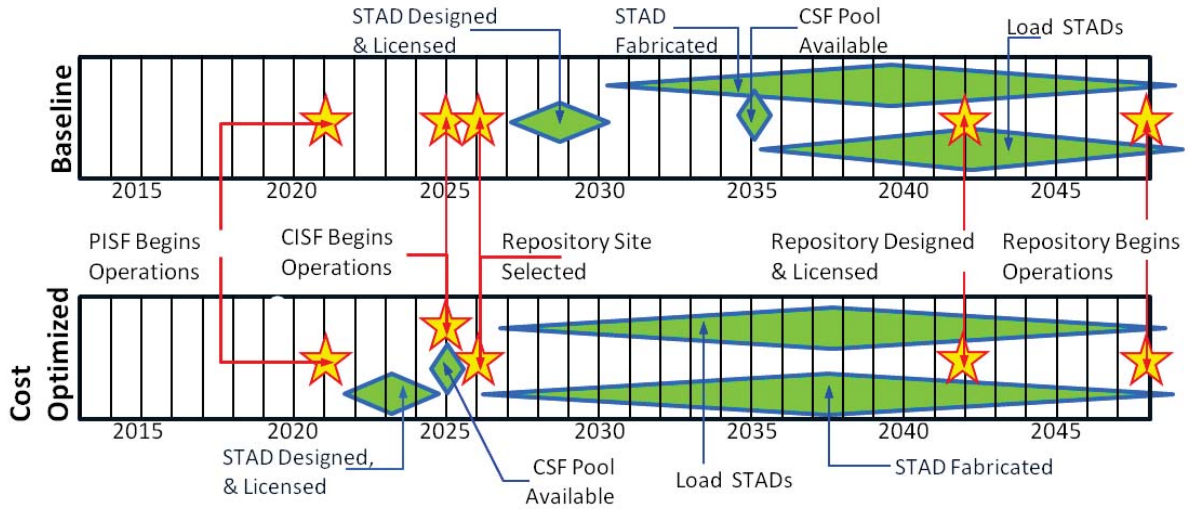

The Cost Optimized approach accelerates the expenditure of capital funds on CISF facilities and makes a pool available much sooner than in the Baseline scenario. Design, certification and fabrication of STAD canisters also happens much faster in the Cost Optimized scenario. This adds to both the capital and operating costs in the near term. On the balance, this approach offers an accelerated shift to storage technologies that directly support disposal. This accelerated move to a storage solution that is integrated with final disposition of the waste significantly reduces life cycle costs. It also is likely to be more attractive in terms of getting community consent for a facility that will attract more and higher paying jobs. This may be an admirable goal if annual budgets and legislation support accelerated implementation of a storage approach that is effectively integrated with disposal plans.

Our conclusion is that the schedule for STAD canister development is highly dependent on DOE priorities, the level of project risk DOE is willing to accept, on the expectations of the CISF host community (the additional work associated with packaging UNF into STAD canisters may be highly desirable to the host community), on contract negotiations with the utilities, and on the timing for authorizing legislation. We have outlined one approach that optimizes on lowest overall cost to the waste management system, even though that approach incurs additional costs in the near term. As enabling legislation is passed and DOE settles on its priorities and project Critical Decision-1 approval is granted, a risk mitigation plan and a risk register will have to be developed. The approaches recommended for STAD development should be factored into those documents as the waste management program advances.

4.5 STAD Canister System Scenarios and Life Cycle Cost Analysis

This section describes the analysis performed to evaluate the system impacts of the three STAD canister concepts, noting that the analysis covers both the Baseline and the Cost Optimized STAD canister development schedules. With reference to Table 4-5, scenarios 1, 5, 9 and 13

correspond to the Baseline schedule, and the remaining scenarios correspond to the Cost Optimized schedule.

4.5.1 Total System Model

The systems analysis performed to analyze the impacts of the STAD canister concepts was performed using the TSM. The TSM[32], consisting of the TSM simulation and the TSM Preprocessor (TSMPP), was developed to simulate the Civilian Radioactive Waste Management System (CRWMS) mission. The TSM incorporates a number of elements to form a comprehensive systems analysis tool. The TSM is:

- A real-time process simulation model that achieves the established requirements and provides a rapid means to evaluate alternative approaches to achieve program and project goals
- Based on established process optimization tools and methods, usability and accepted system analysis techniques
- An end-to-end model with interaction of waste acceptance, transportation, and repository parameters and constraints.

The TSM is a planning tool that estimates the logistics and impacts of various operational assumptions in accepting radioactive wastes. The original TSM tracks SNF wastes from discharge from the reactor, through transportation, until ultimate emplacement in a geologic repository and calculates the various costs associated with onsite storage, transportation, and emplacement. TSM also provides logistic information regarding the CRWMS, including information relative to the waste stream movement and the system resources required to accomplish that movement.

The TSM is an “event driven” simulator, which means that it models movement of objects in a sequentially connected series of processes or activities based on the events that occur. The main event that occurs in the simulation is that the “time” of the simulation is continuously incremented in 8-hour time steps. The simulation progresses through the 8-hour steps until all waste cask loads are shipped, the cask loads are processed into waste packages, and the waste packages are emplaced.

The following changes were made to the original configuration of the TSM to support the Task Order 12 analysis:

- Waste acceptance is limited to commercial UNF at utilities and government sites.
- The Repository module was modified to simulate the functions of a CISF, and the repository element is modeled as a “black box” that receives the output of the CISF.
- Tracking of decay heat for DPCs in storage at the CISF was added to the model. The modified TSM tracks the heat for each assembly from discharge to the reactor pool through receipt and storage at the CISF.
- Transportation from the CISF to the repository is not specifically modeled, although an off-line calculation of transportation costs is done using the cost models from the TSM.

[32] DOE 50040-UM-01-6.0, *User Manual for the Total System Model*

- Wet Handling Facility (WHF) process times are adjusted to provide the necessary throughput for DPC repackaging into STAD canisters. Note that the TSM WHF serves as the Pool Repackaging Facility at the CISF.

4.5.2 Scenarios Analyzed

4.5.2.1 Key Assumptions

This section describes the system scenarios analyzed for the STAD canister concepts described in Section 4.1.

Waste Stream Assumptions

- Use the TSM 2009 UNF discharge projection used in the Task Order 11 analysis[33] as a basis (~129,400 MT)
- Assume all operating reactors receive a 20 year life extension
- For purpose of this analysis, do not include Watts Bar 2 or Bellefonte completion, or any next-generation reactors
- Reduce UNF projection to include Oyster Creek early shutdown in 2019, Kewaunee early shutdown in 2013, and Crystal River early shutdown in 2009. Resulting projection ~ 128,680 MT).

STAD Canister Sizes

- Use STAD canister sizes described in Section 4.1, with the addition of the 21PWR/44BWR, which was the Yucca Mountain TAD canister:
    - 24 PWR/68 BWR (Large)
    - 21 PWR/44 BWR
    - 12 PWR/32 BWR (Medium)
    - 4 PWR/9 BWR (Small)

  Note that the STAD canister designs described in Section 4.1 cannot load South Texas or CE 16x16 fuel since these assemblies are longer than the general population of commercial PWR fuel assembly lengths. As noted in Section 4.1, separate STAD canister designs would need to be developed when required to accommodate these unusual fuel assembly designs. For the purposes of this analysis, however, it is assumed that all current UNF fuel types can be accommodated in the above listed STAD canisters.

Transportation Cask Fleet

- No truck casks will be needed (all UNF sites will be able to load a rail cask)
- Assume that high burn-up fuels are able to be transported in the future based on additional technical review, the receipt of burn-up credit and/or authorization to include moderator exclusion in transport package designs. If this authorization is not received, all high burn-up fuel would have to be packaged as damaged fuel, and that would greatly

[33] *DOE Advisory and Assistance Contract, Task Order 11: Development of Consolidated Storage Facility Concepts*, February 1, 2013, Prepared by Energy Solutions, et al

reduce the number of assemblies that could be transported per cask as well as increasing the waste management system costs significantly (more dual purpose canisters, more transport casks, procurement of damaged fuel cans, etc.). Note. This potential cost impact has not been quantified as part of this feasibility study.

- Damaged fuel is not explicitly considered as part of the inventory at operating plants that is modeled for transportation to a CISF. No data is currently available on the number of assemblies at operating plants that will have to be handled as damaged assemblies when they are moved to storage, or into transportation casks. This will have to be factored into future detailed loading plans as data becomes available.
- Shipments from waste sites to the PISF/CISF nominally consist of three transportation casks, two buffer cars, and one security car. The three-cask consist is a basic assumption in the TSM, and is based on a typical annual allocation for an operating reactor at a 3,000 MT/year acceptance rate in accordance with the DOE acceptance priority ranking,[34] or "queue." Note that for shutdown sites, larger consists could be used (e.g., five casks) to reduce the number of shipments, but the TSM cannot, at present, vary the consist size among reactors.
- Assume that a standard DPC transportation overpack is used for each major DPC vendor (NAC, Holtec, and NUHOMS). The DPC transportation casks used will be:
    - Holtec HI-STAR 190
    - NUHOMS MP-197HB
    - NAC MAGNATRAN
    - Fuel Solutions TS-125 (Big Rock Point only)
    - South Texas DPC (24 assm.) – No current cask design can accommodate South Texas UNF due to its length; assume a "generic" lower capacity DPC due to fuel assembly weight and length.
    - Holtec HI-STAR HB (Humboldt Bay only) – DPCs are stored in HI-STAR HB casks, which are Transportable Storage Casks (TSC)
- Transportation overpacks described in Section 4.1 will be used for the STAD canisters. The 4 PWR/9 BWR STAD canisters will be shipped in units of 4 (16 PWR or 36 BWR assemblies per cask).
- Existing TSCs (TN-40 and TN-68) will be used for transportation at the sites where they are currently used for storage (Prairie Island and Peach Bottom). It is also assumed that the TN-32 (used at McGuire, North Anna and Surry) will be licensed for transportation.
- For UNF stored in non-transportable storage casks, it is assumed that the storage canisters/cask will be licensed for transportation, or the UNF will be repackaged into transportable canisters (see Task Order 11 Report, Table 5-3).
- For scenarios with bare UNF transport from reactor pools, assume transportation casks with a capacity of 32 PWR or 68 BWR assemblies, with partially loaded (16 PWR or 32 BWR) configurations for high heat UNF.
- Table 4.3 lists the transportation casks used in this analysis and their characteristics.

[34] DOE/RW-0567, *Acceptance Priority Ranking and Annual Capacity Report*

Table 4-3. Task 12 Transportation Casks

Cask Name	Fuel Type	Capacity	Cask Heat Limit (kW)	Comments
HI-STAR 190	BWR	68 – 89	14	Based on HI-STAR 100
	PWR	24 – 37	18	Based on HI-STAR 100
HI-STAR HB	BWR	80	4	Humboldt Bay only
MP-197HB	BWR	61	18	
	PWR	24 – 32	24	
TS-125	BWR	64	18	Big Rock Point only
MAGNATRAN	BWR	56 – 87	23	
	PWR	24 – 37	24	
Large STAD Canister	BWR	68	20	
	PWR	24	24	
Medium STAD1 Canister	BWR	44	14	Based on Yucca Mountain design
	PWR	21	22	Based on Yucca Mountain design
Medium STAD2 Canister	BWR	32	11	
	PWR	12	16	
Small STAD Canister	BWR	36 (4x9)	14	4 STAD canisters per transportation task
	PWR	16 (4x4)	21	4 STAD canisters per transportation cask
Bare UNF Casks	BWR	68/32[1]	14	Heat limit derived from HI-STAR 100
	PWR	32/16[1]	20	Heat limit derived from HI-STAR 100
	PWR	24/12[1]	17	South Texas only; Heat limit derived from HI-STAR 100
TN-68	BWR	68	21	Transportable Storage Cask
TN-32	PWR	32	19	Transportable Storage Cask; heat limit based on TN-40. Assume transportation license granted.

Cask Name	Fuel Type	Capacity	Cask Heat Limit (kW)	Comments
TN-40	PWR	40	19	Transportable Storage Cask
South Texas DPC	PWR	24	24	Generic cask; heat limit derived from MP-197HB

[1] Second value is high heat loading

Storage Casks

- Use the same reactor site storage casks as in the Task Order 11 analysis (see Task Order 11 Report, Table 5-2), with the addition of the Holtec HISTAR-190, to be used at Browns Ferry (in 2013), Sequoyah (in 2014), and Watts Bar (in 2015).
- STAD canister storage casks at the CISF will have the following capacities (see Section 4.1.1 for STAD canister storage cask descriptions):
    - 24 PWR/68 BWR: 1 per cask
    - 21 PWR/44 BWR: 1 per cask
    - 12 PWR/32 BWR: 3 per cask
    - 4 PWR/9 BWR: 4 per cask
- Note that while up to seven 4 PWR/9 BWR STAD canisters could be stored in a single storage cask (see Section 4.1.1., Figure 4-3), for the purposes of this analysis the storage cask capacity is assumed to be the same as the transportation configuration.

Waste Site Assumptions

- Use site access capabilities from the Task Order 11 analysis (no truck sites)
- Current shutdown sites (including Crystal River and Kewaunee) will be placed at the head of the acceptance queue, with all UNF picked up within 4 years. Due to the early start date assumed for the PISF (2021), Oyster Creek will be picked up once the CISF begins operation in 2025
- All new shutdown sites (not current shutdown sites) are assumed to discharge their final core to the pool, and leave the UNF in the pool until accepted by DOE
- For scenarios with operating site pickup, sites shutting down after start of acceptance will be picked up in regular oldest fuel first (OFF) queue order. For scenarios with shutdown site only pickup, sites will be picked up in the order of shutdown

PISF/CISF Assumptions

- The PISF and CISF are located at the same site (i.e., the CISF is an expanded PISF)
- Assume a Western site for the PISF/CISF
- The PISF will accept UNF from shutdown sites only (including Kewaunee and Crystal River). See Table 4-4 for PISF acceptance.
- The CISF will operate as a “gateway” to the repository (all UNF shipped to the repository goes through the CISF for packaging into disposal canisters). It should be noted that after the repository starts operation, STAD canisters loaded at reactor sites could be

transported directly to the repository, rather than to the CISF. However, the repository emplacement heat limit and/or lag storage capacity could limit this option. For simplicity and due to the lack of knowledge of the repository design, all UNF is assumed to be processed through the CISF in this analysis.

- CISF operation ends when all UNF is picked up from reactors and transferred to the repository
- PISF Startup: 2021
- CISF Startup: 2025
- CISF Repackaging Facility (pool) operation date:
  - 2048 for canister acceptance scenarios (DPCs, TSCs, STAD canisters)
  - 2025 for bare UNF acceptance scenarios
- Nominal shipment rate from reactors to CISF:
  - 3,000 MT/year for scenarios with operational reactor acceptance
  - For shutdown site only pickup, all sites will be emptied out within 30 years of shutdown; this limits the maximum annual acceptance rate to about 4,000 MT/year. One scenario (17) will be run to show the impact of extending the maximum time for emptying sites to 40 years; this limits the maximum annual acceptance rate to about 3,000 MT/year.

Table 4-4. Task 12 PISF Acceptance Rates

Year	Site	Casks	MT	Year Total	Goal	TO11 Transportation Cask	TO12 Transportation Cask
2021	Humboldt Bay	5	28.9			HISTAR-HB	HISTAR-HB
	Trojan	33	358.9	387.8	400	HISTAR-100	HISTAR-190
2022	Rancho Seco	21	228.4			NUHOMS MP-187	NUHOMS MP-197HB
	Big Rock Pt	7	57.9			TS125	TS125
	Lacrosse	5	38.0			NAC STC	NAC MAGNATRAN
	Zion	29	484.6	808.9	800	NAC MAGNATRAN	NAC MAGNATRAN
2023	Zion	32	534.8			NAC MAGNATRAN	NAC MAGNATRAN
	Kewaunee	42	519.1			NUHOMS MP-197HB	NUHOMS MP-197HB
	Yankee Rowe	15	127.1	1181.0	1200	NAC STC	NAC MAGNATRAN
2024	Maine Yankee	60	542.3			NAC UMS	NAC MAGNATRAN

Year	Site	Casks	MT	Year Total	Goal	TO11 Transportation Cask	TO12 Transportation Cask
2024	Haddam Neck	40	412.3			NAC STC	NAC MAGNATRAN
	Crystal River	39	576.2	1530.7	1500	NUHOMS MP-197HB	NUHOMS MP-197HB
	Total	**327**	**3908.5**				

Repository Assumptions

- Repository operation date: 2048
- Nominal shipment rate from CISF to repository; 3,000 MT/year
- Repository waste package emplacement heat limit
  - Base Case: no emplacement heat limit (3,000 MT/year shipment from CISF to repository
  - Option: Show impact of repository emplacement heat limit:
    - 21PWR/44BWR TAD canister: 8,000W
- Transportation consist from CISF to Repository:
  - 24 PWR/68 BWR STAD canisters: 3 casks
  - 21 PWR/44 BWR TAD canisters: 3 casks
  - 12 PWR/32 BWR STAD canisters: 5 casks
  - 4 PWR/9 BWR(x4): 4 casks

  These consist sizes result in approximately the same metric tons per shipment

4.5.2.2 TSM Scenarios

Seventeen (17) scenarios were developed to cover variations in the following key parameters:

- Reactor Operations Acceptance (accept from operating reactors or only from shutdown reactors)
- Reactor Cask Acceptance (DPCs/TSCs, bare UNF then DPCs/TSCs, or STAD canisters loaded at reactors then DPCs/TSCs)
- STAD Canister Size

Note that STAD canister loading at reactor sites was assumed only in scenarios where acceptance was limited to shutdown sites.

Table 4-5 shows the TSM scenarios analyzed for this study. Of these scenarios, those involving acceptance of only DPCs and TSCs from shutdown and operating sites (scenarios 1, 5, 9, and 13) correspond to the Baseline STAD Canister Development Schedule shown in Figure 4-7. The remaining scenarios correspond to the Cost Optimized STAD Canister Development Schedule shown in Figure 4-12.

Table 4-5. TSM Scenarios

Scn.	STAD Canister Size	Reactor Operations Acceptance	Reactor Cask Acceptance	PISF Start Date[1]	Repository Start Date	Repackaging Facility Start Date
1	24/68	Shutdown + Ops	DPCs + TSCs	2021	2048	2048
2	24/68	Shutdown + Ops	Bare UNF + DPCs/TSCs	2021	2048	2025
3	24/68	Shutdown Only	Bare UNF + DPCs/TSCs	2021	2048	2025
4	24/68	Shutdown Only	STADs, then DPCs/TSCs	2021	2048	2048
5	21/44	Shutdown + Ops	DPCs + TSCs	2021	2048	2048
6	21/44	Shutdown + Ops	Bare UNF + DPCs/TSCs	2021	2048	2025
7	21/44	Shutdown Only	Bare UNF + DPCs/TSCs	2021	2048	2025
8	21/44	Shutdown Only	STADs then DPCs/TSCs	2021	2048	2048
9	12/32	Shutdown + Ops	DPCs + TSCs	2021	2048	2048
10	12/32	Shutdown + Ops	Bare UNF + DPCs/TSCs	2021	2048	2025
11	12/32	Shutdown Only	Bare UNF + DPCs/TSCs	2021	2048	2025
12	12/32	Shutdown Only	STADs, then DPCs/TSCs	2021	2048	2048
13	4/9(x4)	Shutdown + Ops	DPCs + TSCs	2021	2048	2048
14	4/9(x4)	Shutdown + Ops	Bare UNF + DPCs/TSCs	2021	2048	2025
15	4/9(x4)	Shutdown Only	Bare UNF + DPCs/TSCs	2021	2048	2025
16	4/9(x4)	Shutdown Only	STADs, then DPCs/TSCs	2021	2048	2048
17	12/32	Shutdown Only, 40 Year Site Cleanout	STADs, then DPCs/TSCs	2021	2048	2048

[1] PISF begins operation in 2021, followed by the CISF in 2025 on the same site

4.5.3 Overall System Impacts

This section describes the overall system impacts from the system analysis.

4.5.3.1 Utility Impacts

Utility impacts will vary with the number of canisters/casks loaded at the reactor sites. Table 4-6 shows the results of the TSM analysis of UNF acceptance from reactors for the analyzed scenarios.

Table 4-6. Summary of Acceptance from Reactors

Scenario	Acceptance Description	DPCs	TSCs	STAD Canisters	Bare UNF	Total
1, 5, 9, 13	Base Case – DPCs/TSCs from Operating Reactors	9,925	388	0	0	10,313
2, 6, 10, 14	Bare UNF plus DPCs/TSCs from Operating Reactors	3,105	203	0	9,628	12,936
3, 7, 11, 15	Bare UNF plus DPCs/TSCs from Shutdown Reactors	4,828	242	0	7,866	12,936
4	24/68 STAD canisters plus DPCs/TSCs from Shutdown Reactors	4,830	242	5,971	0	11,043
8	21/44 STAD canisters plus DPCs/TSCs from Shutdown Reactors	4,830	242	7,617	0	12,689
12	12/32 STAD canisters plus DPCs/TSCs from Shutdown Reactors	4,830	242	12,160	0	17,232
16	4/9 STAD canisters plus DPCs/TSCs from Shutdown Reactors	4,830	242	38,852	0	43,924
17	12/32 STAD canisters plus DPCs/TSCs from Shutdown Reactors, 40 Year Site Cleanout	4,811	242	12,124	0	17,177

Plant Operations

The impact of STAD canister size on plant operations, the resources and ability to produce power, is of great importance to the utilities and should not be minimized. The most significant factor on plant operations is the time required for STAD canister packaging activities inside the structure housing the spent fuel pool. For a large STAD canister the time to complete these activities is approximately four days (utilizing all 24 hours in a day). For medium and small STAD canisters these activities take approximately 10% and 20% less time[35], respectively. For smaller STAD canisters, these minor time savings come primarily from shorter loading time (fewer assemblies to load) and canister lid welding time (takes less time to weld lids for smaller

[35] Based on typical canister loading operations for current dry storage facilities. The provided times for packaging are for PWR fuel assemblies; small = 4 fuel assemblies, medium = 12 fuel assemblies, and large = 24 fuel assemblies.

canisters). All other STAD canister activities require time that is approximately independent of the STAD canister size and, of course, it is necessary to load more small and medium canisters than large ones, for the same amount of UNF. This means that, to achieve the packaging capacity of a large STAD canister, the scenarios based on utilizing medium and small STAD canisters would increase the packaging time by approximately a factor of two and a factor of five, respectively. Therefore, utilizing a large STAD canister has the least impact on plant operations and is the most desirable from a Utility perspective. Utilizing a medium STAD canister is less desirable. Utilizing a small STAD canister is least desirable and would have a highly adverse effect on plant operations. Since usage of a single small STAD canister (serial packaging, one canister) is impractical it is not considered in other sections of this document.

Note that utilization of a transfer cask which contains four small STAD canisters during packaging (parallel packaging, four canisters) would mitigate some of the low efficiency of performing operations using a single STAD canister at a time. However, to utilize this approach the existing processes and equipment need to be redesigned to be used for multiple STAD canisters in parallel (e.g., equipment used for draining, vacuum drying, and sealing). The most challenging of these is the likely development of a process for sealing four STAD canisters in parallel with a four-head welding machine. If these processes and equipment are developed, packaging of UNF using four small STAD canisters in parallel would become more desirable than using a medium STAD canister but still less desirable than using a large STAD canister. Additionally, the new four-head welding machine could possibly be used on a large STAD canister to minimize welding time even further.

Plant Modifications

In order to perform STAD canister packaging activities inside the SNF loading structure it is necessary to build an infrastructure and establish the associated operating procedures. Performing modifications is resource intensive (requires funds and human capital) and should be minimized when considering the optimal STAD canister size design. For the majority of plants the utilization of STAD canisters will likely require minimal modifications because most already have existing infrastructure, including crane capacities, necessary to support canister operations for dry cask storage at an ISFSI. The physical dimensions and weights of small, medium, and large STAD canisters are typically bounded by the corresponding parameters of an ISFSI canister and, since the packaging process is very similar, minimal modifications are envisioned. For plants without an ISFSI it is possible that some modifications would be required and for additional equipment to be procured (e.g., welding equipment, an upgraded cask handling crane). For these plants, the most significant potential modification would be to the crane system which is necessary to handle a STAD canister and the associated transfer cask. The large STAD canister package weighs the most (requires highest-capacity crane), followed by four small STAD canisters and a medium STAD canister. Although a substantial cost, since additional crane capacity is only a fraction of the cost of installing a complete crane system, all STAD canisters and transfer casks are approximately equally desirable with respect to this criterion.

Worker Safety

Maximizing worker safety during STAD canister packaging is of primary importance. This objective is met by reducing the risk, or radiological dose, to workers during operations that involve STAD canister activities. Since the types of steps performed in packaging a STAD

canister are almost identical for all canister sizes, the duration of these steps determines the radiological impact on worker dose. Therefore, the risk increases with increasing activity associated with loading the UNF and must be mitigated, assuming the process is the same (i.e. greater dose may drive increased use of remote operations).

Radiological risk is mitigated by preventing unplanned events that increase radiological exposure. During some of the steps in loading UNF, the canisters contain water. If the canister contains high heat-load UNF, there is a higher potential for water expansion (increase in canister pressure) and hydrogen generation (increases ignition likelihood during welding). However, these issues are not directly related to the canister size and can be mitigated by careful monitoring and canister design (e.g., since hydrogen is created by reaction of water and aluminum used for either heat removal or for boron-containing plates, alternatives to aluminum for these applications should be considered).

An estimate of the potential radiological impact of loading STAD canisters of different sizes was made using the worker dose results from the Yucca Mountain Environmental Impact Statement (EIS)[36]. The EIS calculated the worker dose from cask loading operations based on a per-cask estimate of radiation dose. By performing a simple ratio of casks loaded for the STAD canister scenarios, an estimate of the worker dose can be made. The results are shown in Table 4-7. For Scenario 16, two results are given to bound the radiological impacts: one assuming that STAD canisters are loaded and handled 4 at a time, and one assuming that each STAD canister is loaded and handled singly. This demonstrates how mitigating actions (in this case, equipment and operations changes) can reduce the radiological impact of loading smaller STAD canisters.

Table 4-7. Estimated Worker Radiation Doses – Reactor Cask Loading Operations

Acceptance Mode	Scenario	Canisters	Casks	Dose (Person-Rem)	Change From Base Case
Base Case -DPCs/TSCs	1,5,9,13	10,313	10,313	3,940	0
Bare UNF + DPCs/TSCs	2,3,6,7,10,11,14,15	12,936	12,936	4,940	1,000
24 PWR/68 BWR STADs + DPCs/TSCs	4	11,043	11,043	4,220	280
21 PWR/44 BWR STADs + DPCs/TSCs	8	12,689	12,689	4,840	900
12 PWR/32 BWR STADs + DPCs/TSCs	12	17,232	17,232	6,580	2,640
4 PWR/9 BWR STADs + DPCs/TSCs	16	14,785	14,785	5,650[1]	1,710
4 PWR/9 BWR STADs +	16	43,924	14,785	16,770[2]	12,830

[36] DOE/EIS-0250, Final Environmental Impact Statement for a Geologic Repository for the Disposal of Spent Nuclear Fuel and High-Level Radioactive Waste at Yucca Mountain, Nye County, Nevada, February 2002

Acceptance Mode	Scenario	Canisters	Casks	Dose (Person-Rem)	Change From Base Case
DPCs/TSCs					
12 PWR/32 BWR STADs + DPCs/TSCs, 40 Year Site Cleanout	17	17,177	17,177	6,560	2,620

[1] Assumes 4 STAD canisters per cask, 4 STAD canisters handled at a time

[2] Assumes 1 STAD canister handled at a time

For purposes of this study in assessing utilization of a STAD canister and evaluating the size, industrial safety should also be considered as a factor. We have not assessed the risk associated with each activity in the STAD canister evaluation from incorporating new equipment and systems, additional scaffolding, rigging activities, and fire control measures from welding, that would be required for loading STAD canisters. However, all of these activities currently are being performed in existing plants and we do not foresee that any significant new additional risk would be incorporated into the evaluation. By modifying procedures, industrial safety can be accounted for adequately to comply with regulations to minimize any impact to worker safety.

4.5.3.2 Cost Considerations

Shipments (Reactors to CISF, CISF to Repository)

There are three basic shipment profiles from the reactor sites to the CISF; these are shown in Figure 4-14 (in metric tons per year). In Scenario 1, all UNF is accepted in DPCs/TSCs, in Scenario 2 UNF from pools is accepted in bare UNF casks, and in Scenario 3 UNF is accepted only from shutdown sites (UNF in pools at shutdown remains in the pools until picked up), with all sites being emptied within 40 years of shutdown. In addition, Figure 4-14 shows the shipment profile for Scenario 17, where UNF is accepted only from shutdown sites, with all sites being emptied within 40 years of shutdown.

Figure 4-14. UNF Acceptance Profiles, Metric Tons per Year

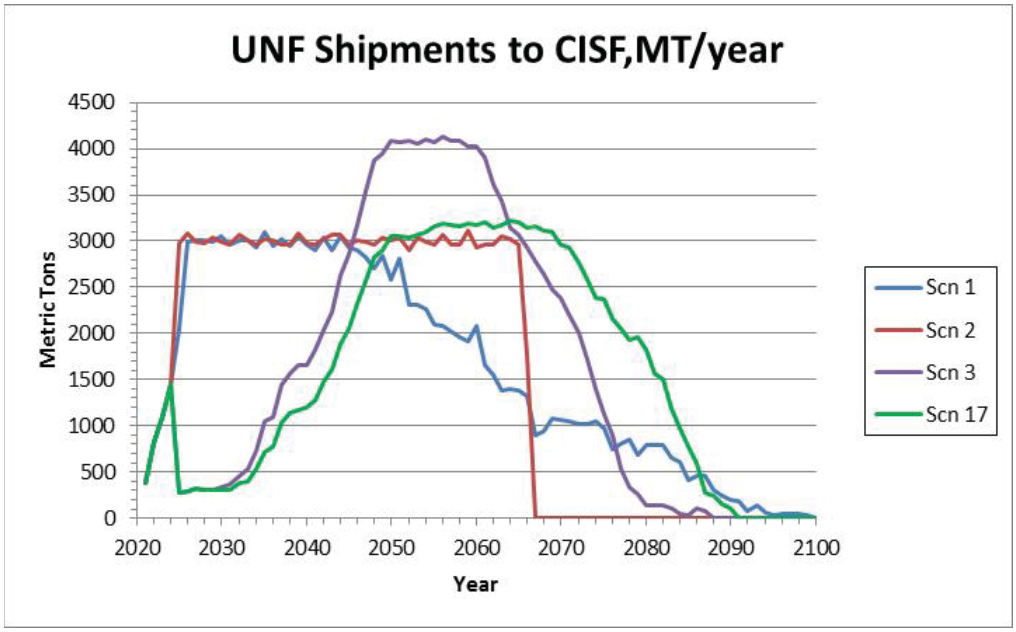

As the size of the transportation cask changes, there are variations in the number of casks shipped per year, as shown in Figure 4-15. In Scenario 1, only large DPCs and TSCs are shipped, and in Scenario 2 the shipment is a mix of bare UNF and DPCs/TSCs. The curves for Scenarios 4, 8, 12, and 16 show the impact of changing the STAD size (for STADs loaded from reactor pools at shutdown sites).

Figure 4-15. UNF Acceptance Rates, Casks per Year

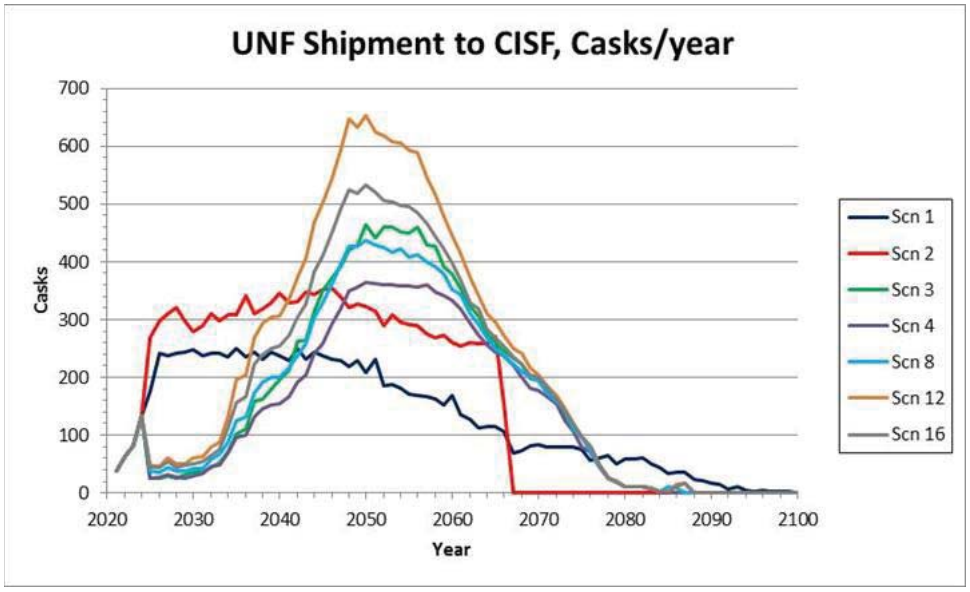

For the scenarios involving acceptance of bare UNF or STAD canisters from shutdown reactors only, the TSM will attempt to empty the reactor pools before taking DPCs/TSCs from dry storage. This reflects the desire of reactor owners to decommission their pools as soon as possible after shutdown. The results of the TSM analysis show that the average time between

shutdown and pool cleanout for these reactors is 16 years. However, this result is significantly impacted by the assumption that all sites would be emptied within 30 years of shutdown (recall that this time frame was chosen to keep UNF shipment rates at less than 4,000 MT/year). Note that if the time frame for emptying shutdown sites were extended to 40 years, the average pool cleanout time would increase to 20 years. This overall time frame could be shortened if higher acceptance rates were allowed, which would result in a shorter time frame for pool cleanout. For example, the bare UNF transportation cask used in this analysis has an average PWR assembly heat limit of 1,339 Watts in its partially loaded configuration (16 assemblies). This heat limit is not particularly high (some current DPC transportation overpacks allow an average of 1,000 Watts per assembly). A typical high burnup PWR assembly (60 GWD/MT) will have decayed to less than 1,300 Watts by 7 years after discharge from the reactor. So theoretically, all reactor pools could likely be cleaned out in less than 10 years. However, this same 60 GWD/MT assembly would require at least 11 years of decay before it could be stored in the highest heat limit storage casks currently available (which have a heat limit of about 1,000 Watts per assembly). Use of a lower heat limit cask (e.g. 700 Watts per assembly) could require up to 25 years decay. So in conclusion, the time frame for cleanout of shutdown reactor pools in these scenarios is consistent with the time frame that the pools would need to remain open to transfer all UNF to dry storage.

Transportation Costs

Table 4-8 shows the annual and total transportation operations costs for shipment from the reactors to the CISF for the 17 scenarios. The difference between the lowest cost scenario (4) and the highest cost scenario (17) is about $460M. Table 4-9 shows the total transportation operations costs for shipments from the CISF to the repository, for three example distances (100 mile, 500 miles, and 1,000 miles). Of course, if the CISF is co-located with the repository, this cost will be zero. The CISF-to-repository transportation costs range from less than 7% to over 50% of the reactors-to-CISF cost, depending on the scenario and distance.

Table 4-8. Transportation Operations Costs, Shipments to PISF/CISF (M 2012$)

	Scenario Number							
Year	**1, 5, 9, 13**	**2,6,10,14**	**3,7,11,15**	**4**	**8**	**12**	**16**	**17**
2021	1.9	1.9	1.9	1.9	1.9	1.9	1.9	1.9
2022	2.6	2.6	2.6	2.6	2.6	2.6	2.6	2.6
2023	4.3	6.4	6.4	4.3	4.3	6.4	4.3	6.4
2024	11.8	11.8	11.8	11.8	11.8	11.8	11.8	11.8
2025	15.3	22.7	3.3	1.6	4.2	4.9	4.6	4.9
2026	21.8	25.4	2.6	0.5	3.3	4.1	4.0	4.1
2027	21.5	23.7	3.1	0.5	4.1	5.8	5.3	5.8

	Scenario Number							
Year	**1, 5, 9, 13**	**2,6,10,14**	**3,7,11,15**	**4**	**8**	**12**	**16**	**17**
2028	21.7	24.7	2.5	0.5	3.4	4.6	4.1	4.6
2029	20.6	22.0	3.0	0.5	3.4	4.3	4.1	4.3
2030	20.5	22.8	3.5	0.2	4.0	5.3	4.6	5.0
2031	20.4	22.3	3.2	0.7	3.8	5.0	4.4	4.4
2032	19.2	23.2	4.0	2.0	4.7	6.0	5.1	5.2
2033	21.0	23.8	4.6	1.2	6.2	6.9	5.8	5.6
2034	20.2	22.6	6.0	3.8	8.6	11.7	10.1	8.6
2035	20.9	22.7	9.3	10.8	11.6	15.7	13.0	12.1
2036	20.6	24.1	9.9	11.2	12.2	17.3	13.8	13.1
2037	20.2	23.2	14.5	13.4	15.9	23.4	19.5	17.7
2038	19.4	22.2	14.3	13.4	17.3	25.2	20.1	18.8
2039	20.6	20.4	15.8	13.6	17.4	24.8	20.2	19.2
2040	19.8	24.1	17.4	13.8	17.7	25.3	21.1	19.2
2041	20.3	21.4	18.5	16.9	19.1	28.0	22.1	21.0
2042	21.2	22.9	21.5	17.5	20.6	30.3	25.6	23.3
2043	20.6	23.1	22.4	19.7	22.0	31.9	25.7	24.7
2044	20.9	24.5	22.2	22.5	24.5	34.3	29.5	27.6
2045	21.0	25.8	24.2	22.0	27.5	37.2	32.4	31.9
2046	20.6	26.5	24.9	26.5	28.7	38.7	34.7	32.9
2047	20.8	26.5	25.4	28.0	30.5	40.0	37.3	36.1
2048	19.7	29.1	26.1	35.6	33.0	39.6	37.5	30.3
2049	20.0	29.1	27.7	34.4	33.0	40.5	39.3	30.5
2050	17.8	54.6	34.5	28.8	33.4	39.7	39.2	38.6

	Scenario Number							
Year	**1, 5, 9, 13**	**2,6,10,14**	**3,7,11,15**	**4**	**8**	**12**	**16**	**17**
2051	20.1	37.2	29.6	29.3	31.8	41.0	37.2	38.6
2052	17.1	31.9	29.5	27.7	32.3	41.6	38.4	37.7
2053	17.4	35.0	29.1	29.2	32.9	41.2	34.3	38.9
2054	14.3	34.1	30.9	28.1	31.1	40.7	37.0	39.5
2055	16.3	33.2	30.5	28.1	30.4	40.1	36.2	39.2
2056	15.4	32.9	30.8	27.7	30.9	41.0	34.5	39.9
2057	16.6	35.2	29.5	29.0	30.7	38.8	34.4	40.3
2058	15.5	26.6	34.1	26.7	30.6	39.7	33.6	39.6
2059	15.0	26.5	40.3	27.0	28.6	39.7	32.2	39.5
2060	15.4	26.2	40.2	26.1	24.3	39.7	30.1	40.6
2061	13.2	21.0	40.1	25.9	26.5	43.0	28.4	35.2
2062	12.2	19.0	42.2	23.9	25.0	42.2	25.0	32.7
2063	10.8	17.6	40.2	20.9	22.5	33.7	24.7	31.2
2064	10.6	17.0	31.0	19.4	20.4	23.1	21.2	30.1
2065	11.2	18.0	23.9	17.7	18.9	21.3	19.1	28.7
2066	10.9	10.9	24.6	17.4	17.4	19.2	18.6	26.2
2067	8.7	1.3	19.2	16.3	15.7	17.3	16.0	25.6
2068	8.4	0.0	15.9	14.2	15.2	16.7	15.3	25.2
2069	8.6	0.0	14.3	14.0	14.9	15.5	14.7	23.7
2070	9.0	0.0	13.9	12.9	13.7	14.8	13.9	23.1
2071	8.4	0.0	14.6	13.2	13.0	14.0	13.5	21.6
2072	7.5	0.0	12.1	12.3	11.7	12.7	12.4	21.0
2073	8.0	0.0	10.7	10.4	10.7	11.3	11.0	18.7

	Scenario Number							
Year	**1, 5, 9, 13**	**2,6,10,14**	**3,7,11,15**	**4**	**8**	**12**	**16**	**17**
2074	7.5	0.0	9.0	8.8	8.3	9.3	8.8	16.6
2075	7.5	0.0	7.8	6.5	6.9	7.2	7.5	15.8
2076	6.2	0.0	8.4	5.6	5.8	6.1	6.0	14.4
2077	6.3	0.0	4.6	3.3	3.7	3.7	4.3	12.8
2078	6.1	0.0	3.4	2.1	1.9	1.9	2.3	12.9
2079	5.7	0.0	1.6	1.7	1.7	1.7	1.7	11.5
2080	5.5	0.0	0.6	0.6	0.6	0.7	0.6	11.2
2081	5.9	0.0	0.6	0.6	0.6	0.6	0.6	10.2
2082	6.3	0.0	0.6	0.6	0.6	0.6	0.6	9.3
2083	5.5	0.0	1.2	0.4	0.4	0.4	0.6	8.7
2084	4.9	0.0	0.2	0.3	0.4	0.3	0.2	6.8
2085	4.5	0.0	0.8	0.2	0.0	0.2	0.2	5.4
2086	4.0	0.0	0.0	0.4	0.8	1.0	0.8	4.0
2087	3.9	0.0	0.0	0.6	0.6	1.2	1.2	2.6
2088	3.4	0.0	0.0	0.0	0.2	0.2	0.2	1.6
2089	2.6	0.0	0.0	0.0	0.0	0.0	0.0	1.2
2090	1.8	0.0	0.0	0.0	0.0	0.0	0.0	0.4
2091	1.7	0.0	0.0	0.0	0.0	0.0	0.0	0.2
2092	1.2	0.0	0.0	0.0	0.0	0.0	0.0	0.0
2093	0.8	0.0	0.0	0.0	0.0	0.0	0.0	0.0
2094	0.4	0.0	0.0	0.0	0.0	0.0	0.0	0.0
2095	0.0	0.0	0.0	0.0	0.0	0.0	0.0	0.0
2096	0.7	0.0	0.0	0.0	0.0	0.0	0.0	0.0

	Scenario Number							
Year	**1, 5, 9, 13**	**2,6,10,14**	**3,7,11,15**	**4**	**8**	**12**	**16**	**17**
2097	0.2	0.0	0.0	0.0	0.0	0.0	0.0	0.0
2098	0.2	0.0	0.0	0.0	0.0	0.0	0.0	0.0
2099	0.2	0.0	0.0	0.0	0.0	0.0	0.0	0.0
2100	0.0	0.0	0.0	0.0	0.0	0.0	0.0	0.0
Total	**935**	**1,100**	**1,053**	**891**	**997**	**1,296**	**1,125**	**1,354**

Table 4-9. Transportation Operations Costs, Shipment From CISF to Repository (M 2012$)

STAD Canister Size	MT/ Cask	Cask Weight (tons)	Number of Casks	Casks/ Shipment	MT/ Shipment	Number of Shipments	Transportation Cost (M 2012$)		
							100 Miles	500 Miles	1000 Miles
24PWR/68BWR	11.00	150	12,181	3	33.01	4,061	72.7	189.1	332.9
21PWR/44BWR	8.67	125	15,439	3	26.00	5,147	90.0	229.0	400.6
12PWR/32BWR	5.38	100	24,869	5	26.89	4,974	112.7	273.5	472.5
4PWR/9BWRx4	6.76	150	19,768	4	27.03	4,942	103.7	268.1	471.5

Cask Fleet and Rolling Stock

Table 4-10 shows the cask fleet and rolling stock requirements for the 17 TSM scenarios. It is apparent from these results that scenarios involving shipment of bare UNF or STAD canisters from reactors require significantly larger cask fleets than scenarios where DPCs are used as the primary mode of shipment. Table 4-11 shows the estimated cask fleet and rolling stock requirements for shipments from the CISF to the repository, with a CISF-to-repository distance of 100 miles, 500 miles, and 1,000 miles. These results are based on consists of 3 casks per shipment for 24 PWR/68 BWR and 21 PWR/44 BWR STAD canisters, 5 casks per shipment for 12 PWR/32 BWR STAD canisters, and 4 casks per shipment for 4 PWR/9 BWR STAD canisters (shipped 4 to a cask). For conservatism, it is also assumed that casks are purchased and used in "consist-size" units (i.e., 3, 4, or 5 at a time). It is likely that the cask fleet in Table 4-11 will be required in addition to the cask fleet shown in Table 4-10. For scenarios involving shipment of STAD canisters from reactors, shipments from reactors to the CISF will be peaking at the time of repository start, requiring the entire available cask fleet. Therefore, additional casks and rolling stock will be required to service the repository. Obviously, for other scenarios, the STAD canister designs would likely not be compatible with the existing cask fleet (with the possible exception of the 24 PWR/68 BWR STAD canister).

Table 4-10. Cask Fleet Requirements, Shipment to PISF/CISF

Scenario	Casks	Rail Cars	Buffer Cars	Escort Cars
1	66	83	58	29
2	120	137	94	47
3	123	137	94	47
4	99	113	78	39
5	66	83	58	29
6	120	137	94	47
7	123	137	94	47
8	108	122	84	42
9	66	83	58	29
10	120	137	94	47
11	123	137	94	47
12	108	122	84	42
13	66	83	58	29
14	120	137	94	47
15	123	137	94	47
16	111	125	86	43
17	108	122	84	42

Table 4-11. Estimated Cask Fleet for Shipments from CISF to Repository

STAD Canister Size	100 Miles			500 Miles			1,000 Miles		
	Casks/ Rail Cars	Buffer Cars	Escort Cars	Casks/ Rail Cars	Buffer Cars	Escort Cars	Casks/ Rail Cars	Buffer Cars	Escort Cars
24PWR/68BWR	18	12	6	18	12	6	18	12	6
21PWR/44BWR	21	14	7	21	14	7	21	14	7

STAD Canister Size	100 Miles			500 Miles			1,000 Miles		
	Casks/ Rail Cars	Buffer Cars	Escort Cars	Casks/ Rail Cars	Buffer Cars	Escort Cars	Casks/ Rail Cars	Buffer Cars	Escort Cars
12PWR/32BWR	20	8	4	20	8	4	25	10	5
4PWR/9BWR (x4)	20	12	6	20	12	6	24	13	6

Radiological Impacts (Workers and General Public)

The radiological impacts of transportation from the reactor sites to the CISF, and from the CISF to the repository were estimated from the analysis performed for the Yucca Mountain EIS. The worker and public radiation dose for transportation to the CISF were estimated by ratioing the cask shipments for the TSM scenarios to those used in the EIS, and multiplying the result by the EIS dose. It was assumed that the average shipment miles per cask for the EIS (2,100 miles) and the TSM scenarios were similar. The results are shown in Table 4-12.

Table 4-12. Estimated Worker and Public Radiation Exposure (Person-Rem) – Transportation from Reactors to CISF

Acceptance Mode	Scenario	Canisters	Casks	Dose (Person-Rem)		Change From Base Case	
				Workers	Public	Workers	Public
Base Case -DPCs/TSCs	1,5,9,13	10,313	10,313	4,560	1,590	0	0
Bare UNF + DPCs/TSCs	2,3,6,7,10,11, 14,15	12,936	12,936	5,720	2,000	1,160	410
24 PWR/68 BWR STADs + DPCs/TSCs	4	11,043	11,043	4,890	1,700	330	110
21 PWR/44 BWR STADs + DPCs/TSCs	8	12,689	12,689	5,610	1,960	1,050	370
12 PWR/32 BWR STADS + DPCs/TSCs	12	17,232	17,232	7,620	2,660	3,060	1,070
4 PWR/9 BWR STADs + DPCs/TSCs	16	14,785[1]	14,785	6,540	2,280	1,980	690
12 PWR/32 BWR STADS + DPCs/ TSCs, 40 Year Site Cleanout	17	17,177	17,177	7,600	2,650	3,040	1,060

[1] 4 STAD canisters transported in one transportation cask

In order to estimate the worker and public radiation does from shipment from the CISF to the repository, the ratio of cask shipments was multiplied by the ratio of the distance from the CISF

to the repository (100, 500, or 1,000 miles) and the average cask shipment distance from the EIS (2,100 miles). This result was then multiplied by the EIS radiation dose. The results are shown in Table 4-13.

Table 4-13. Estimated Worker and Public Radiation Exposure (Person-Rem) – Transportation from CISF to Repository

STAD Canister Size	No. Casks	Distance to Repository (miles)					
		100		500		1000	
		Worker	Public	Worker	Public	Worker	Public
24PWR/68BWR	11,749	12,181	260	90	1,280	450	2,570
21PWR/44BWR	14,933	15,439	330	110	1,630	570	3,250
12PWR/32BWR	23,965	24,869	520	180	2,620	910	5,240
4PWR/9BWR(x4)	19,077	19,768	420	150	2,080	730	4,160

4.5.3.3 CISF Impacts

CISF Receipt and Processing Capability

Figure 4-16 shows the UNF in storage (in metric tons) at the CISF versus time for Scenarios 1, 2, and 3. As stated in Section 4.5.3.2 these scenarios represent the three basic shipment profiles from the reactor sites to the PISF/CISF. The Scenario 2 profile shows the impact of accepting bare UNF from the reactors (see Figure 4-14): once the repository starts operation, the bare UNF arriving at the CISF is in approximate equilibrium (in MT) with the STAD canisters being shipped to the repository until 2066. The Scenario 3 profile shows the impact of the receipt of UNF from shutdown sites only; since receipt of the bulk of the UNF is delayed until after the repository is operational in 2048, the buildup of UNF in storage is less than for the other scenarios. This effect is enhanced for Scenario 17, since the maximum acceptance rate is reduced to about 3,000 MT/yr and the acceptance period is extended, resulting in a significantly lower maximum storage requirement than the other scenarios.

Figure 4-16. UNF Storage at the CISF for Scenarios 1-3 and 17 (Metric Tons)

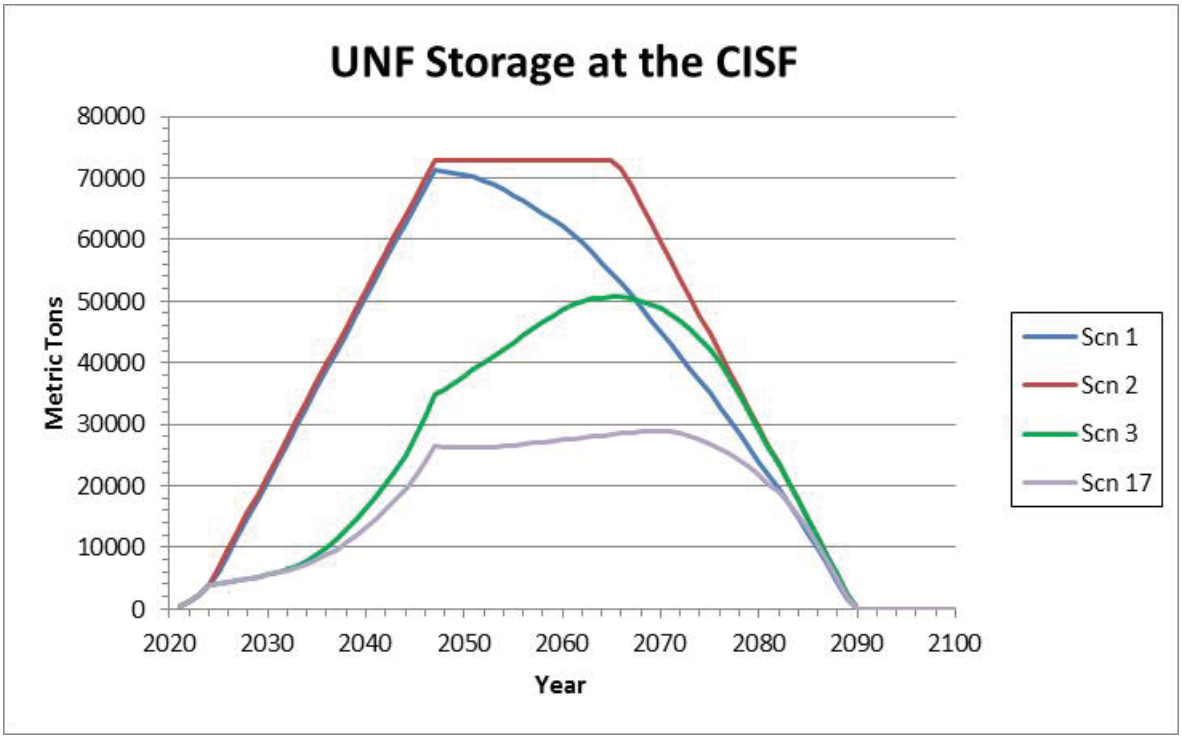

The 17 TSM scenarios resulted in three basic storage profiles at the CISF. Figure 4-17 shows the CISF cask storage for Scenario 4, which involves shipping 24 PWR/68 BWR STAD canisters and DPCs/TSCs from shutdown sites to the CISF. The figure shows that the DPCs stored at the CISF reach a peak in 2047, but are quickly repackaged into STAD canisters once the repository starts operation in 2048. This reflects both the operational "rules" of the TSM and the inputs of this scenario. Once the repackaging facility becomes operational in 2048, it repackages DPCs into STAD canisters for shipment to the repository at its maximum capacity, subject to the input DPC heat limit for repackaging (which is related to the repository waste package heat limit). In this scenario, the DPC return heat limit has been set very high, so there is no restriction on DPC repackaging. The repackaging facility capacity is about 3,000 MT/year, so the DPC inventory in storage is rapidly depleted. Note that all the scenarios involving shipment of bare UNF or STAD canisters to the CISF exhibit this characteristic DPC storage profile.

Figure 4-18 shows the CISF cask storage for Scenario 6, which differs from Scenario 4 in that bare UNF is shipped from operating and shutdown sites to the CISF, where it is repackaged into 21PWR/44BWR STAD canisters. The DPC storage profile is similar to Scenario 4, but the peak years of DPC and STAD canister storage are close together.

Scenarios involving shipment of DPCs/TSCs only to the CISF show a DPC storage profile similar to that shown in Figure 4-19. DPC storage increases until 2048 (to a much larger peak than in Figure 4-17), and then decreases as DPCs are repackaged for shipment to the repository.

Figure 4-17. Scenario 4 CISF Cask Storage

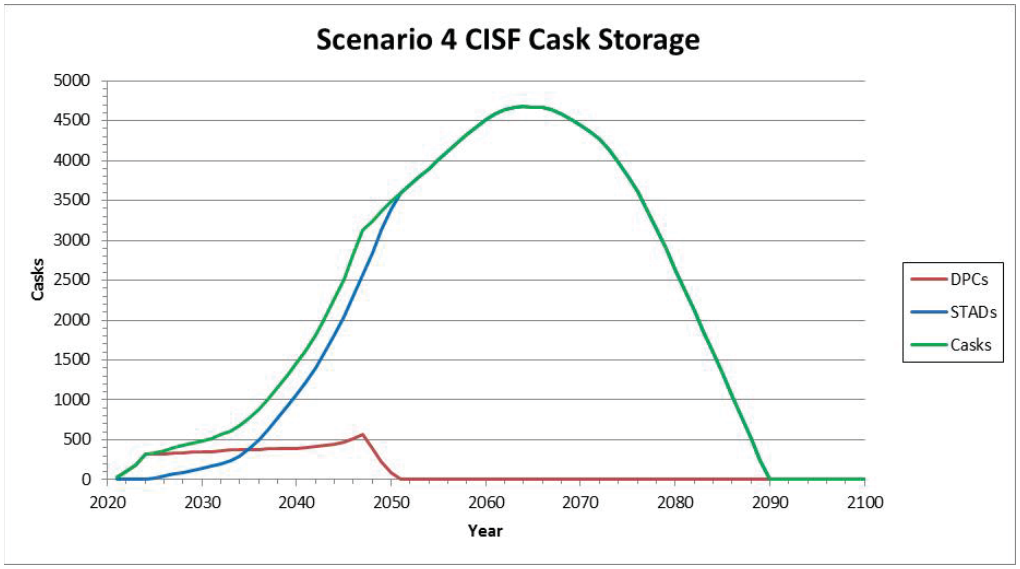

Figure 4-18. Scenario 6 CISF Cask Storage

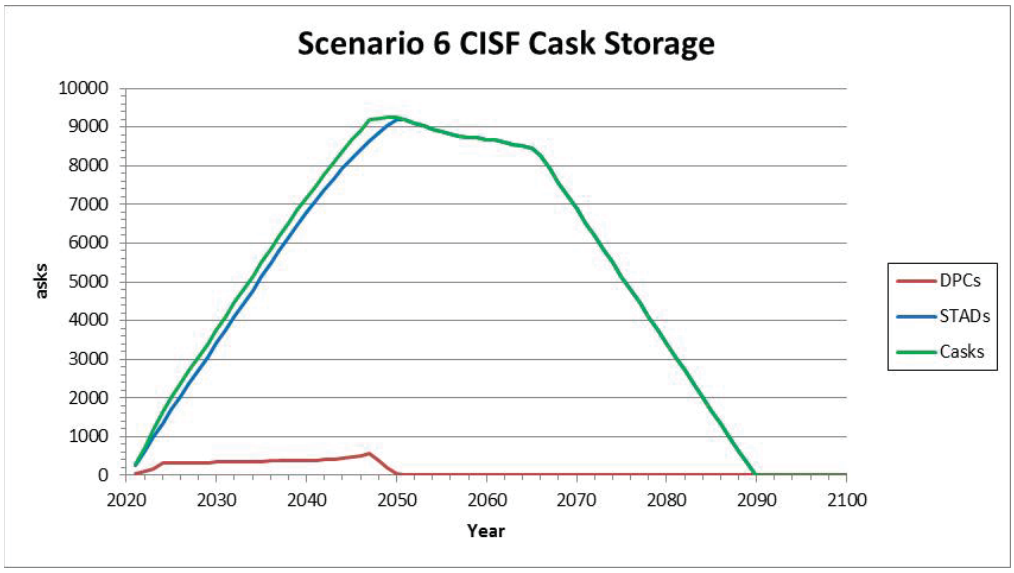

Figure 4-19. Scenario 1 CISF Cask Storage

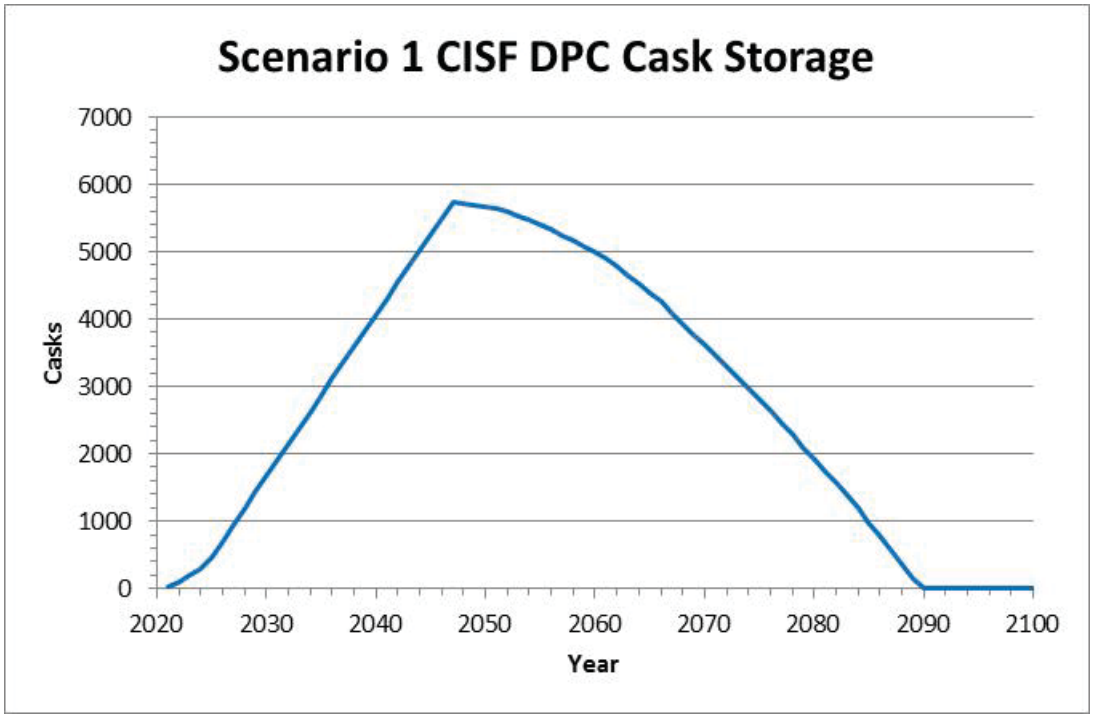

A key design feature that will impact the CISF process flow is the maximum throughput of the CISF repackaging facility. For scenarios involving shipment of bare UNF to the CISF, once the repository starts operation the repackaging facility has to process DPCs returning from aging for repackaging plus the bare UNF being received from the reactors. This is particularly true if the repository waste package heat limit is low, since UNF in DPCs will be much cooler than UNF being received from the reactor pools. For up to 20 years, this will require a repackaging facility throughput capability significantly greater than 3,000 MT/year if these two waste streams are to be processed simultaneously. For this analysis, it is conservatively assumed that the repackaging facility will be able to process both streams at once. However, this will entail constructing a larger facility that may be underutilized for most of CISF operation. If the capacity of the repackaging facility is limited to 3,000 MT/year, a storage profile such as shown in Figure 4-20 results. The maximum number of DPCs in storage is increased from 560 to 1,640, but the maximum number of STAD canisters in storage is reduced from 9,206 to 7,186 (maximum cask storage reduced from 9,258 to 7,959). So, the larger capacity repackaging facility would not appear to be a reasonable design decision.

Figure 4-20. Scenario 6 CISF Cask Storage, 3,000 MT/yr Repackaging Facility Limit

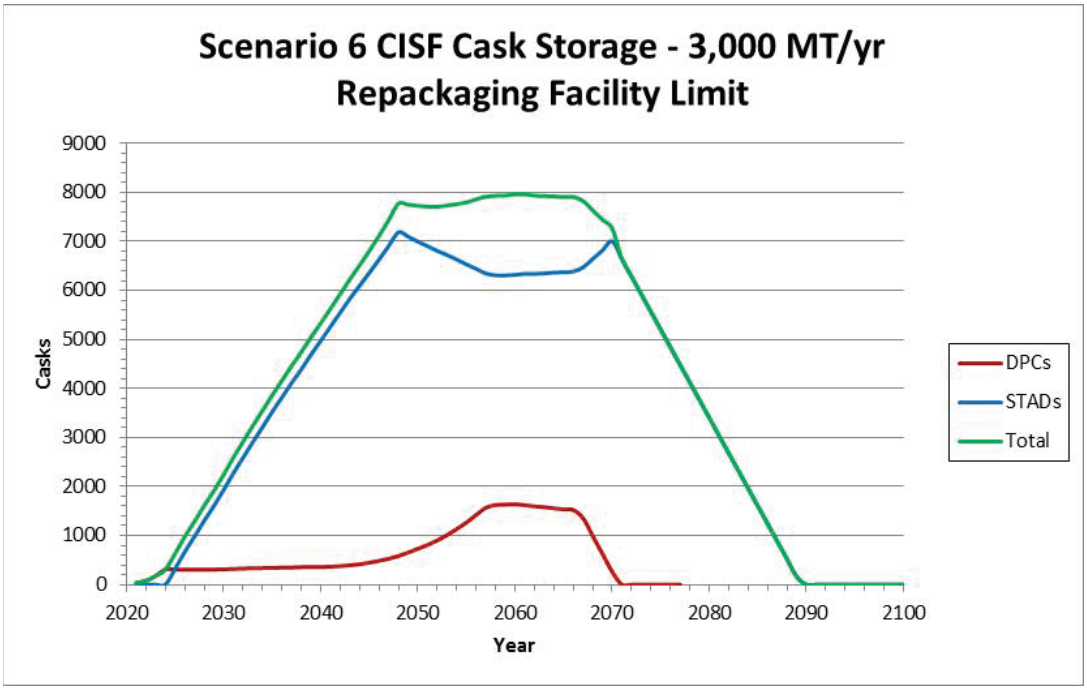

Table 4-14 summarizes the CISF throughputs and maximum storage requirements. It is apparent from these results that utilizing smaller STAD canisters or accepting bare UNF from reactors increases the throughput and storage requirements for the CISF. This will result in increased demand on CISF receiving, storage, and repackaging facilities, and increased requirements for storage casks and pads. The storage impacts can be reduced for smaller STAD canisters (12 PWR/32 BWR and 4 PWR/9 BWR) by storing multiple STAD canisters in a single storage overpack (scenarios 10-12 and 13-17). In addition, for scenarios involving receiving and/or loading 4 PWR/9 BWR STAD canisters, it is possible that four STAD canisters can be handled at a time, as discussed in Section 4.5.3.1 for reactor sites.

Table 4-14. Summary of CISF Throughputs

Scenario	Casks to CISF	CISF Receipt Completed	Casks to Repository	Maximum Casks in Storage	Maximum MT in Storage	Year of Maximum Storage
1	10,313	2099	12,181	5,721	71,339	2047
2	12,936	2067	12,175	7,385	72,942	2047
3	12,936	2085	12,175	4,654	50,665	2064
4	10,987	2085	12,175	4,675	50,828	2064
5	10,313	2099	15,439	5,721	71,339	2047
6	12,936	2067	15,434	9,258	72,942	2047
7	12,936	2085	15,434	5,959	50,665	2064
8	12,689	2087	15,434	5,952	50,618	2064
9	10,313	2099	24,869	5,721	71,339	2047
10	12,936	2067	24,865	5,197	72,942	2047

Scenario	Casks to CISF	CISF Receipt Completed	Casks to Repository	Maximum Casks in Storage	Maximum MT in Storage	Year of Maximum Storage
11	12,936	2085	24,865	3,162	50,665	2064
12	17,232	2087	24,865	3,133	50,240	2064
13	10,313	2099	19,768	5,721	71,339	2047
14	12,936	2067	19,764	12,677	72,942	2057
15	12,936	2085	19,764	9,343	50,665	2064
16	14,785	2087	19,764	7,534	50,273	2064
17	17,177	2090	24,865	1,820	28,894	2069

4.5.3.4 Repository Impacts

The repository design will ultimately be driven by the site geology. The site geology will determine the waste package size and heat limits, which will in turn drive the design of the receipt, lag storage, waste packaging, and emplacement facilities. Similar to the CISF, utilizing smaller STAD canisters increases the throughput requirements for the repository. This will result in increased demand on repository receiving and waste packaging facilities, as well as require an increased number of waste packages.

Worker impacts (safety, radiological impacts) are similarly affected by the STAD canister and waste package throughput of the repository. Handling larger numbers of transportation casks and STAD canisters will result in increases in worker radiation exposures, unless design and/or operations changes are made to reduce exposures per cask/STAD canister.

4.5.3.5 Impact of Repository Emplacement Heat Limits

The analysis shown in the sections 4.5.3.1 through 4.5.3.3 assumes that STAD canisters will be shipped from the CISF to the repository at a rate of 3,000 MT/year, with no limit on STAD canister heat level. In reality, the waste package emplacement heat limits may have a significant effect of the ability of the CISF to supply the repository with STAD canisters. A very low heat limit (e.g., for a closed clay or granite repository) may result in a CISF shipment rate that is significantly less (due to the need for aging of STAD canisters) than 3,000 MT/year (or at least will result in a shipment rate with significant variability).

Since the design of a future repository is not known, the impact of emplacement heat limits was not included in the logistics or cost analysis (Note. Section 5.0 identifies an R&D opportunity pertaining to this subject). However, to demonstrate the potential impacts of an emplacement heat limit, a variation on Scenario 6 was run (bare UNF and DPCs/TSCs to CISF from operating and shutdown sites; 21PWR/44BWR STAD canisters to repository) with a waste package emplacement limit of 8 kW. Note that for the Yucca Mountain repository (which was an “open” design with forced ventilation prior to closure), the emplacement average 21PWR/44BWR waste package heat limit was 11.8 kW, with a maximum heat of 18 kW (the repository “line loading” included a mix of UNF and cooler defense wastes). A constant waste package heat limit would likely be applicable to a “closed” repository in a medium such as salt.

Figures 4-21 and 4-22 show the impact of the 8 kW emplacement limit on shipment rate to the repository and casks in aging at the CISF. The waste package heat limits drive the STAD

canister shipment rate below the nominal (no heat limit) rate and extend the duration of shipments to the repository by about 20 years. A similar impact can be seen on the casks in storage at the CISF: CISF storage is extended by about 40 years, although the effect on the peak cask storage is small.

Figure 4-21. Shipment Rate to Repository, 21/44 STAD canisters, 8 kW Emplacement Limit

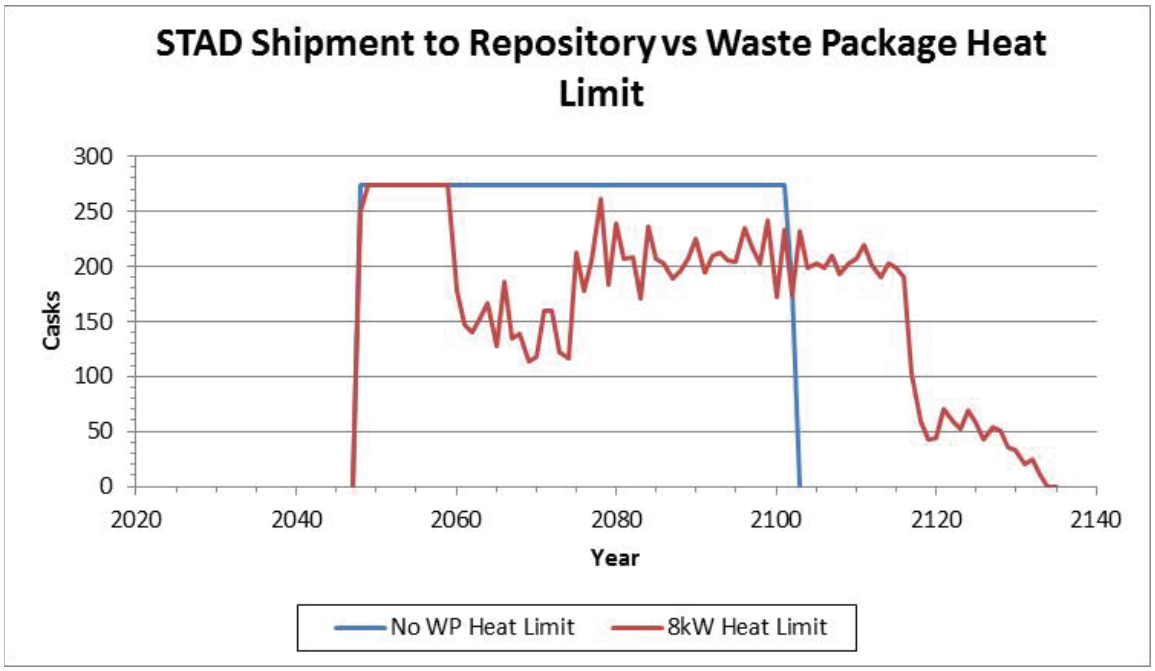

Figure 4-22. CISF Casks in Aging, 21/44 STAD canisters, 8,000 W Emplacement Limit

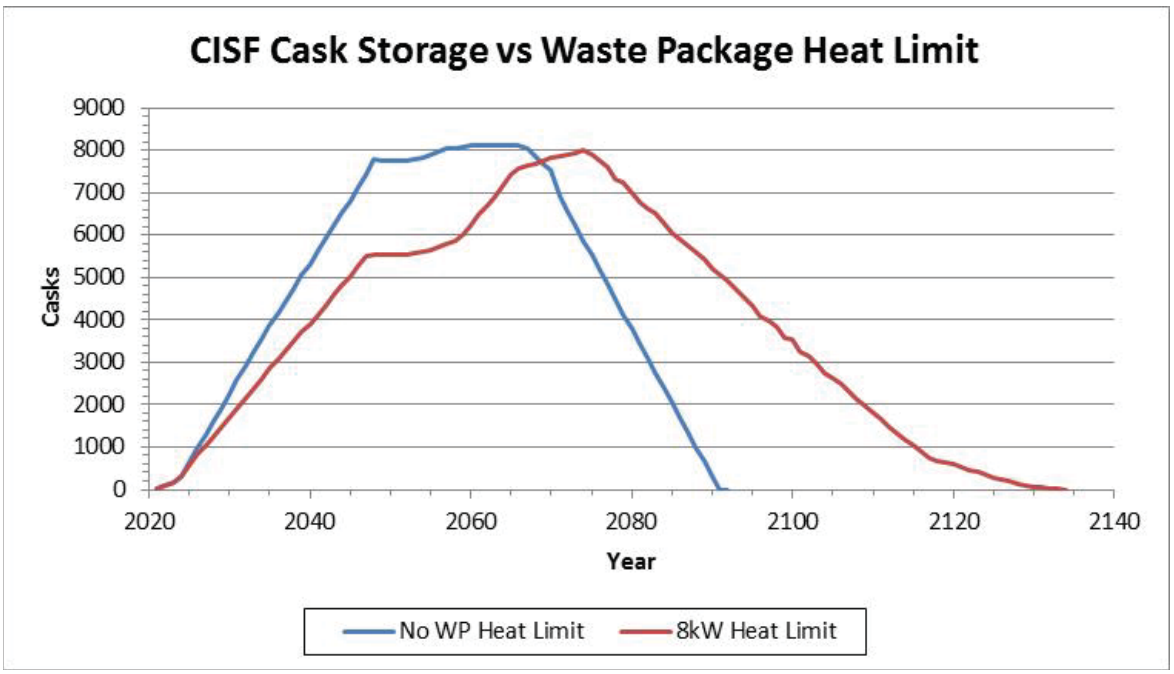

It should be noted that the waste package emplacement analysis was performed using the TSM waste package closure facilities, which are modeled after the Yucca Mountain repository design. These facilities had a maximum combined throughput capacity of about 2,300 MT/year when processing only 21PWR/44BWR STAD canisters. Therefore, the STAD canister shipment rates to the repository for the "no heat limit" scenario were adjusted to 2,300 MT/yr in order to allow for a common basis to compare the two cases. In addition, the CISF repackaging facility processing capacity was limited to 3,000 MT/year. These adjustments also affected the cask storage profile for the "no heat limit" case in Figure 4-21.

4.5.4 Advantages and Disadvantages Identified from TSM Analyses.

This section summarizes the advantages and disadvantages identified from the TSM analyses of the three STAD canister concepts.

1. In general, decreasing STAD canister size increases the processing time at reactors, the number of shipments, the number of CISF storage casks required, the receipt and processing requirements at the CISF, and the radiation doses to workers and the general public. Transportation costs and CISF handling and storage requirements are also increased as STAD canister size decreases.
2. These impacts can be partially ameliorated for small STAD canisters (4 PWR/9 BWR and 12 PWR/32 BWR) by handling, transporting, and/or storing multiple STAD canisters at a time (e.g. 4 PWR/9 BWR STAD canisters could be loaded and transported in multiples of four, and stored in multiples of four to seven; 12 PWR/32 BWR STAD canisters could be stored in multiples of three).
3. Shipping bare UNF or STAD canisters from reactor pools increases worker and public radiation doses, due to the larger number of casks that are loaded and transported than in the base case (DPCs and TSCs only).
4. Shipping UNF in bare UNF casks from reactor sites increases the number of shipments and transportation costs, but significantly shortens the receipt period and allows bare UNF received at the CISF to be loaded into STAD canisters for storage.
5. Accepting UNF from shutdown reactors only, while increasing transportation costs, results in a shorter acceptance period and reduced storage costs at the CISF.
6. Repository waste package emplacement limits can have a significant impact on CISF to repository shipping rates and CISF operation duration.
7. For scenarios involving acceptance of bare UNF or STAD canisters from shutdown reactors, the time frame for cleanout of reactor pools is consistent with the time frame that the pools would need to remain open to transfer all UNF to dry storage.
8. The CISF operating strategy with regard to how soon DPCs are returned from storage for repackaging will affect the design capacity of the CISF repackaging facility and the number of storage casks/pads required.

4.5.5 Life Cycle Cost Considerations and Impacts

Since the STAD canister scenarios defined in the previous section are based on a modified Task Order 11 CISF strategy (modified to align with the DOE's UNF Strategy), the basis for evaluating the impacts of the use of STAD canisters and the characteristics of STAD canister design on life-cycle costs as part of this STAD canister Feasibility Study is the set of Work Breakdown Structure (WBS) elements that was used for Task Order 11. The WBS/cost

categories used for Task Order 11, Development of Consolidated Storage Facility Design Concepts, along with the cost estimate results are shown in the Table 4-15 below.

Table 4-15. Work Breakdown Structure/Cost Categories used for Task Order 11

WBS	Cost Category	Task Order #11 Scenarios (Cost in 2012 $M)						
		1	2	3	4[37]	5	6	7
1.0	Phase 0 : Front End Authorizations & Acquisitions	$446.6	$621.7	$445.5	$747.3	$448.4	$519.1	$519.7
1.1	Front End Plans / Siting	N/A	$0.0	$0.0	$0.0	$0.0	$0.0	$0.0
1.2	CSF Design / Environmental Impact Statement (EIS)	$74.1	$75.3	$73.0	$100.9	$76.0	$74.1	$163.3
1.3	CISF License Application (LA)	$40.7	$40.7	$40.7	$81.5	$40.7	$40.7	$40.7
1.4	Standard Contract Changes (i.e., Queue, etc.)	NA	$0.0	$0.0	$0.0	$0.0	$0.0	$0.0
1.5	Cask Procurements [36 Months Lead]	$25.2	$133.9	$25.2	$25.2	$25.2	$97.8	$24.2
1.6	Transportation	$244.8	$251.8	$244.8	$485.0	$244.8	$244.8	$244.8
1.7	State & Tribal Emergency Plans	$23.5	$24.0	$23.5	$16.5	$23.5	$23.5	$34.8
1.8	Security Plans	$0.2	$0.2	$0.2	$0.2	$0.2	$0.2	$0.2
1.9	Rail Cars	$37.2	$94.9	$37.2	$37.2	$37.2	$37.2	$10.9
1.10	CISF Plans & Permitting	$0.8	$0.8	$0.8	$0.8	$0.8	$0.8	$0.8
2.0	Phase I : Receive Canistered UNF in TSCs	$58.5	$58.5	$58.5	$94.2	$58.5	$58.5	$58.5
2.1	CISF Site Procurement & Construction							
2.1.1	Rail Yard	$9.6	$9.6	$9.6	$12.8	$9.6	$9.6	$9.6
2.1.2	Cask Mobile Lifting / Transfer Equipment	$9.6	$9.6	$9.6	$19.2	$9.6	$9.6	$9.6
2.1.3	Cask Storage Pad (224 Casks)	$5.0	$5.0	$5.0	$10.0	$5.0	$5.0	$5.0
2.1.4	Balance of Plant	$34.3	$34.3	$34.3	$52.2	$34.3	$34.3	$34.3
3.0	Phase II : Receive Canistered UNF in TCs (DPCs/TCs)	$67.7	$75.8	$60.3	$112.7	$80.0	$67.3	$661.9
3.1	CISF Site Procurement & Construction (Add'l for Phase II)							
3.1.1	Cask Storage Pad (2,090 Casks)	$22.9	$31.0	$15.5	$23.1	$35.2	$22.5	$617.1
3.1.2	Canister Transfer Facility	$33.8	$33.8	$33.8	$67.6	$33.8	$33.8	$33.8
3.1.3	Cask Fabrication Facility	$6.6	$6.6	$6.6	$13.2	$6.6	$6.6	$6.6
3.1.4	Balance of Plant	$4.4	$4.4	$4.4	$8.8	$4.4	$4.4	$4.4
4.0	Phase III : Receive Canistered & Uncanistered UNF	$330.2	$330.2	$330.2	$440.3	$330.2	$330.2	$330.2
4.1	CISF Site Procurement & Construction (Add'l for Phase II)							
4.1.1	Pool Repackaging / Waste Handling Facility							
5.0	Phase IV : UNF System Operations	$4,767.3	$5,056.8	$4,584.9	$4,819.6	$4,999.4	$6,727.3	$6,123.7
5.1	UNF System Operations CD-4 (Start of Operations)	$0.0	$0.0	$0.0	$0.0	$0.0	$0.0	$0.0
5.2	Cask Procurements - Remainder During Operations	$814.6	$974.1	$616.6	$814.6	$1,054.2	$2,554.2	$2,314.7
5.3	Rail Car Procurements – Remainder During Operations	$242.0	$389.0	$210.5	$242.0	$242.0	$326.0	$134.1
5.4	Transportation Services / Operations	$1,021.3	$1,009.4	$1,077.7	$674.6	$1,021.3	$1,104.7	$1,016.2
5.5	CISF Facility Operations	$897.7	$870.4	$924.3	$1,196.9	$881.8	$834.8	$281.7
5.6	State & Tribal Emergency Assistance (180(c))	$652.3	$655.1	$650.4	$372.2	$652.3	$705.2	$636.6
5.7	CISF Facility Export to Fence Line Operations	$1,139.6	$1,158.9	$1,105.5	$1,519.5	$1,147.9	$1,202.4	$1,740.5
6.0	Phase V : CISF Deactivation & Decommissioning	$289.8	$289.8	$289.8	$443.1	$289.8	$289.8	$289.8
6.1	CISF Deactivation & Decommissioning							
	TOTAL CISF Life Cycle	**$5,960.1**	**$6,432.7**	**$5,769.1**	**$6,657.2**	**$6,206.4**	**$7,992.1**	**$7,983.8**

[37] Costs shown in Cost Categories 3.0 and 4.0 for Scenario 4 reflect two (2) CSFs. Costs for the two CSFs have been combined together for WBS elements 3.1 and 4.1.

The Task Order 11 CISF analysis was "waste package neutral." That is, the scope of the CISF study ended at the fence line of the CISF and did not specify the type or size of waste package. Because the use and size of STAD canisters will impact repackaging activities and shipments to the repository, additional Cost Categories or WBS Elements have been added.

The following sections describe if and how the CISF costs for each WBS element/cost category are impacted by the use of STAD canisters, the design (capacity) of the STAD canister, and the assumptions used for acceptance of UNF at the CISF.

4.5.5.1 Task Order 11 Cost Categories not Impacted

The following cost categories associated with the development, construction, and operation of a system to consolidate UNF at an interim storage facility have been determined to not be impacted by the use of STAD canisters.

- WBS Element 1.1 – Front End Plans/Siting
- WBS Element 1.2 – CISF Design/EIS
- WBS Element 1.3 – CISF License Application (LA)
- WBS Element 1.4 – Standard Contract Changes
- WBS Element 1.5 (including sub-categories 1.5.3, 1.5.3.1, 1.5.3.2, and 1.5.3.3) – Cask Procurements [36 Month Lead]
- WBS Element 1.6 – Transportation [Pre-Start of Operations]
- WBS Element 1.7 – State & Tribal Emergency Plans
- WBS Element 1.8 – Security Plans
- WBS Element 1.9 (including sub-categories 1.9.1, 1.9.2, 1.9.3, 1.9.4, 1.9.5, 1.9.6, and 1.9.7) – Rail Cars
- WBS Element 1.10 – CISF Plans & Permitting
- WBS Element 1.11 – Shutdown Site Infrastructure
- WBS Element 2.1 (including sub-categories 2.1.1, 2.1.2, 2.1.3, and 2.1.4) – Phase I CISF Site Procurement & Construction
- WBS Element 3.1.2 – Canister Transfer Facility
- WBS Element 3.1.3 – Cask Fabrication Facility
- WBS Element 3.1.4 – Balance of Plant
- WBS Element 5.2.1 – TSCs – Equipment – Remainder
- WBS Element 5.6 – State & Tribal Emergency Assistance (i.e., Section 180 (c))

4.5.5.2 Task Order 11 Cost Categories/WBS Elements Impacted by Use of/Size of STAD Canister

The following cost categories associated with the development, construction, and operation of a system to consolidate UNF at an interim storage facility have been determined to be impacted by the use of STAD canisters.

WBS Element 3.1.1 – Cask Storage Pad: This category includes CISF procurement and construction costs for the cask storage pad. The Cask Storage Pad estimate is built up from estimates of major cost components scaled from the Task Order 11 cost to the required CISF storage capacity for the 17 STAD canister scenarios.

WBS Element 4.1.1 – Pool Repackaging/Waste Handling Facility: This category includes procurement and construction costs for the Pool Repackaging/Waste Handling Facility. This facility will be required at each CISF to provide the ability to handle bare UNF for bare UNF transfer operations into STAD canisters, and repackaging of DPCs and TSCs into STAD canisters. The cost of this facility for the large STAD canisters scenarios is assumed to be the same as the Pool Repackaging/Waste Handling Facility for Task Order 11. The size, complexity, and cost of this facility are estimated to be larger when packaging the medium and smaller STAD canister designs.

WBS Element 5.2 – Cask Procurements: This category includes the actual cask procurements that occur during the entire operations phase subsequent to the 36 months lead procurements (WBS Element 1.5.3). These include procurements for TSC equipment to include TSC impact limiters and skids and ancillary equipment; DPC casks & equipment to include Transport Casks (TCs), TC impact limiters & skids, ancillary equipment, and storage casks (SCs) at the CISF; and bare UNF casks and equipment to include bare UNF casks, bare UNF cask impact limiters and skids, ancillary equipment, and storage canisters and casks at the CISF. The total cask costs are derived from a composite cask type cost multiplied by the total number of casks derived from the TSM model for each of the 17 STAD canister scenarios.

Storage casks at the CISF are assumed to be available for reuse when fuel is removed and new fuel in the same type of cask is received. The number of storage casks needed at the CISF is determined by the maximum number of casks in storage at the CISF, as determined by the TSM. Storage casks for DPCs and STAD canisters are assumed to not be interchangeable so the total number of storage casks needed is estimated from the maximum number of DPCs plus the maximum number of STAD canisters stored at the CISF at any one time. Since these maximums are significantly less than the total number of DPCs and STAD canisters received at the CISF, the number of storage casks assumed for these estimates is 10% greater than the output of the TSM.

WBS Element 5.3 – Rail Car Procurements: This category includes the actual rail car procurements that occur during the entire operations phase subsequent to the 36 months lead procurements (WBS Element 1.9.6). The actual procurements include the cask car, buffer car and escort car procurements. It is noteworthy that no locomotive procurements are expected, as locomotive services are expected to be included in the testing fees and/or the transportation services, as applicable. The WBS 5.3 costs are for procurements during facility operations. The rail car costs incurred prior to the operations phase are included in the WBS 1.6.3 cost sections.

WBS Element 5.4 – Transportation Services/Operations (to CISF): This category includes transportation services/operations costs for shipping UNF to the CISF during the entire operations phase subsequent to pre-start of operations activities (WBS Element 1.6.4). Transportation costs are obtained directly from the TSM. The transportation costs included here are a direct TSM model output for each STAD canister scenario based on delivery to a western U.S. location. The TSM model costs do not include the Teams required to provide security for rail shipments.

Note that transportation operations costs for shipping STAD canisters from the CISF to the repository are not included in this WBS element. See new cost category 5.9 for transportation cost from CISF to repository.

WBS Element 5.5 – CISF Facility Operations: For the Task Order 11 cost estimate, this cost category included all CISF costs associated with receipt of UNF from the reactor sites. Operations cost associated with preparing UNF for shipment to a repository were included in cost category 5.7. For this STAD canister feasibility study, the 5.5 and 5.7 cost categories have been modified to align better with the STAD canister scenarios and acceptance parameters.

Cost category 5.5 now includes all CISF operations with the exception of operations associated with UNF repackaging into STAD canisters (now WBS Element 5.7). The operations costs are based on a build-up for facilities from the 2008 Yucca TSLCC estimate with similar functions. The labor categories and levels of effort were analyzed to determine the required level of effort for the CISF facilities. The variable operating labor costs were further estimated for full operating capacity and a minimal operating capacity to address those years where fewer shipments are coming in or leaving the CISF. The labor costs are scaled by year based on the total number of casks being received and shipped to the repository.

WBS Element 5.7 – CISF Facility Operations (Repackage Bare UNF, DPCs, and TSCs): For the Task Order 11 cost estimate, this cost category included all CISF costs associated with preparing stored UNF for shipment to the repository. As mentioned in the previous section, for this STAD canister feasibility study the 5.5 and 5.7 cost categories have been modified to align better with the STAD canister scenarios and acceptance parameters.

Cost category 5.7 now includes operations associated with UNF repackaging into STAD canisters. The operations costs are based on a build-up for facilities from the 2008 Yucca TSLCC estimate with similar functions. The variable operating labor costs were further estimated for full operating capacity and a minimal operating capacity to address those years where less fuel is being repackaged into STAD canisters. The labor costs are scaled by year based on the total number of bare UNF casks being received, as well as repackaging DPCs and TSCs into STAD canisters.

As discussed in the previous (or later) section, the cost of STAD canisters loaded/packaged at the CISF is included in the life-cycle cost estimate for the 17 STAD canister scenarios. Cost category 5.7.4 is a new WBS element and rolls up to Cost category 5.7.

WBS Element 6.1.1 – Cask Storage Pad D&D: This category includes CISF deactivation & decommissioning costs for the cask storage pad. (D&D of the buildings, spent fuel pool, and other/miscellaneous items were determined to not be impacted by use or size of STAD canisters for the 17 scenarios evaluated and are assumed to be the same as Task Order 11 Base Case (Scenario 1). The costs to D&D the storage pad for the 17 STAD canister scenarios have been scaled from the Task Order 11 cost estimate, which had been estimated by extrapolating from a utility's completed project.

4.5.5.3 New Cost Categories/WBS Elements for STAD Canister Feasibility Study

The following cost categories were developed for this STAD canister Feasibility Study

WBS Element 1.12 – STAD Canister Design and Licensing: This category includes development of a concept design, a full set of system drawings representing the integrated system for satisfying preparation of repository (10 CFR 63), transport (10 CFR 71) and storage (10 CFR 72) licensing, detailed regulator licensing design calculations, and SAR applications to the NRC.

WBS Element 5.2.4 – STAD Canister Transportation (to CISF) Casks Procurements: This category includes the procurement of transportation casks, impact limiters & skids, and ancillary equipment to transport STAD canisters from the reactor sites to the CISF. The STAD canister transportation casks are intended to be reused. The estimated total STAD canister transportation cask costs are based on the composite cost and quantity of STAD canister transportation casks as predicted by the TSM model output for each scenario.

WBS Element 5.7.2 – STAD Canister Procurements: This category includes the procurement of all STAD canisters whether they are loaded at the utility or at the CISF. The cost of the waste packages for placement in the repository was not included in the Task Order 11 cost estimate. The Team consulted with a cask supplier to assess the costs for the different sizes of STAD canisters evaluated in this feasibility study. The estimated cost of each STAD canister is $200K for the 4 PWR/9 BWR, $500K for the 12 PWR/32 BWR, $800K for the 21 PWR/44 BWR, and $1,000K for the 24 PWR/68 BWR.

Bare UNF received at the CISF is assumed to be immediately loaded into STAD canisters. TSCs and DPCs received at the CISF are repackaged into STAD canisters at the CISF, per each scenarios schedule assumptions. STAD canisters are delivered to the reactor sites in Scenarios 4, 8, 12, 16 and 17, where the responsibility and cost of loading is borne by the utility.

WBS Element 5.8 (including sub-categories 5.8.1, 5.8.2, 5.8.3, and 5.8.4) – Procurement of Transportation-Related Equipment for Shipments to the Repository: The Task Order 11 design concepts cost estimate did not include the costs of transporting the waste packages to a repository (assuming the CISF and the repository are not collocated). It is anticipated that significantly more transportation equipment will be necessary to move STAD canisters to the repository, so the cost estimate assumes a separate transportation fleet for shipments to the repository.

The transportation of STAD canisters from the CISF to the repository was modeled by assuming three potential distances from the CISF to the repository – 100 miles, 500 miles, and 1,000 miles. The model estimates that the number of transportation casks (5.8.1), cask railcars (5.8.2), buffer cars (5.8.3), and escort cars (5.8.4) required for a repository 100 miles from the CISF and 500 miles from the CISF are the same, and are the assumed quantities for this life-cycle cost evaluation. Additional casks, rail cars, buffer cars, and escort cars would be required if the repository were 1,000 miles or greater from the CISF, or if the shipment rate was increased. The transportation fleet requirements vary among the different size STAD canisters based on the number of casks per shipment from the CISF to the repository, as noted in section 4.3.3.2.

WBS Element 5.8.1 – STAD Canister Transportation (to Repository) Casks Procurements: This category includes the procurement of transportation casks, impact limiters & skids, and ancillary equipment to transport STAD canisters from the CISF to the repository. The STAD canister transportation casks are intended to be reused. The estimated total STAD cask costs are based on the composite cost and quantity of STAD canister transportation casks as predicted by the TSM model output for each scenario. The repository is assumed to be located 500 miles from the CISF.

WBS Element 5.8.2 – Cask Rail Cars: This category includes the procurement of cask rail cars to transport the STAD canisters from the CISF to the repository.

WBS Element 5.8.3 – Buffer Cars: This category includes the procurement of buffer cars to transport STAD canisters from the CISF to the repository. .

WBS Element 5.8.4 – Escort Cars: This category includes the procurement of escort cars to transport STAD canisters from the CISF to the repository.

WBS Element 5.9 – Transportation Operations Cost to Repository: This category includes transportation services/operations costs of shipping STAD canisters to the repository. Transportation costs are calculated using the cost models from the TSM based on delivery to a repository 100, 500, or 1,000 miles from the CISF, as presented in Table 4-12. The costs do not include the teams required to provide security for rail shipments. The life-cycle cost estimate summary assumes the CISF is 500 miles from the repository.

WBS Element 6.2 – Disposal of DPCs and TSCs: This category includes the cost of disposal of the DPCs and TSCs repackaged at the CISF into STAD canisters. The unit disposal cost is estimated to be $50,000 per DPC, assuming disposal of the entire DPC as Class A LLW with no volume reduction (Note. As described in Section 3.3, Task 11, $50,000 is at the low end of the estimated range for this cost). This unit cost is based on the current charge for disposal at the Clive, UT LLW facility. It should be noted that an alternate method of DPC disposal, removing and compacting the DPC internals for disposal as Class A LLW and decontaminating the shell to de minimis levels for disposal in a commercial landfill, could theoretically reduce disposal costs. However, there are significant uncertainties as to whether decontaminated DPCs could ever be politically acceptable for commercial land fill disposal. This cost was included in this life-cycle estimate to evaluate the cost impact of the different operations and cask acceptance parameters and the availability and design of STAD canisters for direct loading at the reactors and/or receiving bare UNF at the CISF and loading immediately into STAD canisters. Fewer DPCs and TSCs would need to be disposed under the bare UNF and reactor-loaded STAD canister scenarios.

4.5.5.4 Life Cycle Costs for the Seventeen STAD Canister Scenarios

Figure 4-23 illustrates the activities associated with CISF operations and who is responsible for each activity.

Whereas the Task Order 11 analysis evaluated cost and schedule, including the costs on an annual basis, this evaluation is limited to the life-cycle cost impacts. Therefore, the estimated life-cycle costs are total costs only (in 2012 dollars) and are not estimated on an annual basis. Table 4-16 summarizes the life-cycle cost of each of Cost Category down to at least Level 2 of the WBS. New cost categories for the STAD canister feasibility study are highlighted in pink. For reference, the Task Order 11 cost estimate for Scenario 1 is included. Figure 4-24 summarizes the life-cycle cost estimate results graphically.

Figure 4-23. CISF Operations Cost Responsibility

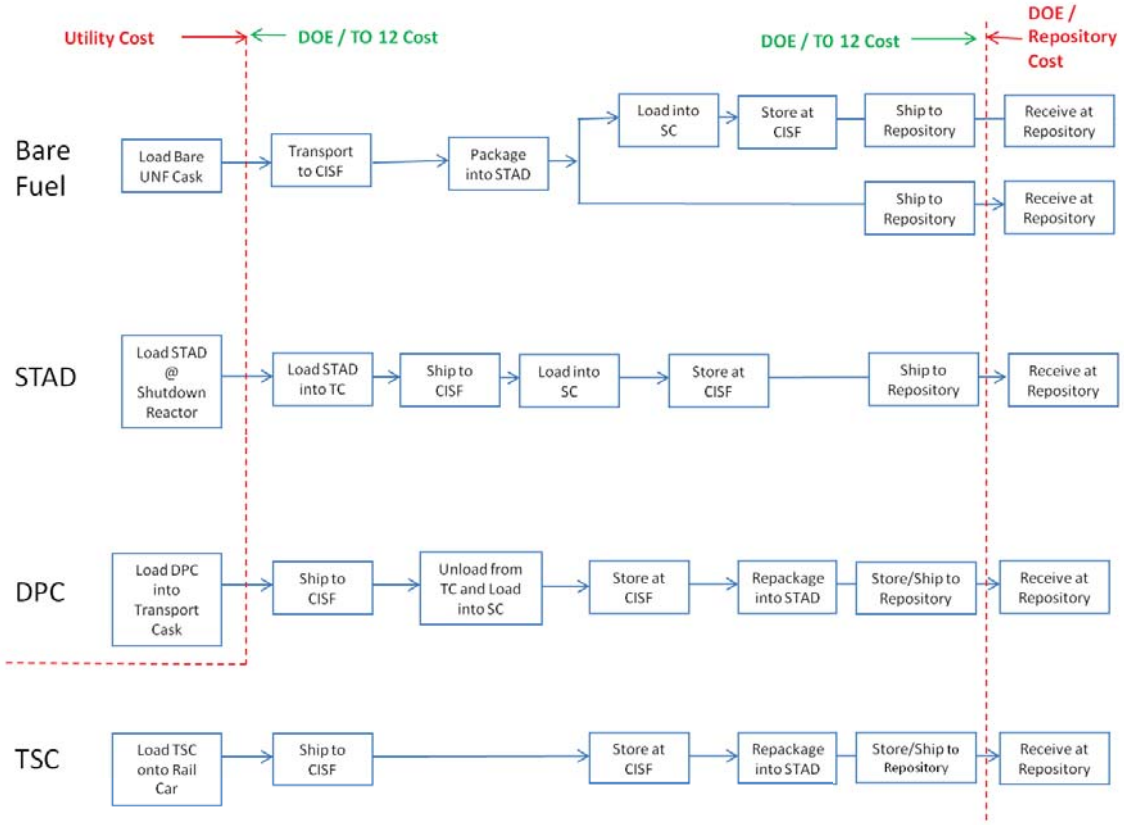

Table 4-16. Summary of Life Cycle Costs for the Seventeen STAD Canister Scenarios analyzed using the Total System Model (Cost in 2012 $M)

WBS	Cost Category	TO #11 Scenario #1	1	2	3	4	5	6	7	8	9	10	11	12	13	14	15	16	17
1.0	Phase 0 : Front End Authorizations & Acquisitions	$446.6	$459.5	$472.5	$472.5	$472.5	$459.5	$472.5	$472.5	$472.5	$459.5	$472.5	$472.5	$472.5	$459.5	$472.5	$472.5	$472.5	$472.5
1.1	Front End Plans / Siting	N/A	N/A	N/A	N/A	N/A	N/A	N/A	N/A	N/A	N/A	N/A	N/A	N/A	N/A	N/A	N/A	N/A	N/A
1.2	CISF Design / Environmental Impact Statement (EIS)	$74.1	$74.1	$74.1	$74.1	$74.1	$74.1	$74.1	$74.1	$74.1	$74.1	$74.1	$74.1	$74.1	$74.1	$74.1	$74.1	$74.1	$74.1
1.3	CISF License Application (LA)	$40.7	$40.7	$40.7	$40.7	$40.7	$40.7	$40.7	$40.7	$40.7	$40.7	$40.7	$40.7	$40.7	$40.7	$40.7	$40.7	$40.7	$40.7
1.4	Standard Contract Changes (i.e., Queue, etc.)	N/A	N/A	N/A	N/A	N/A	N/A	N/A	N/A	N/A	N/A	N/A	N/A	N/A	N/A	N/A	N/A	N/A	N/A
1.5	Cask Procurements [36 Months Lead]	$25.2	$25.2	$25.2	$25.2	$25.2	$25.2	$25.2	$25.2	$25.2	$25.2	$25.2	$25.2	$25.2	$25.2	$25.2	$25.2	$25.2	$25.2
1.6	Transportation	$244.8	$244.8	$244.8	$244.8	$244.8	$244.8	$244.8	$244.8	$244.8	$244.8	$244.8	$244.8	$244.8	$244.8	$244.8	$244.8	$244.8	$244.8
1.7	State & Tribal Emergency Plans	$23.5	$23.5	$23.5	$23.5	$23.5	$23.5	$23.5	$23.5	$23.5	$23.5	$23.5	$23.5	$23.5	$23.5	$23.5	$23.5	$23.5	$23.5
1.8	Security Plans	$0.2	$0.2	$0.2	$0.2	$0.2	$0.2	$0.2	$0.2	$0.2	$0.2	$0.2	$0.2	$0.2	$0.2	$0.2	$0.2	$0.2	$0.2
1.9	Rail Cars	$37.2	$37.2	$37.2	$37.2	$37.2	$37.2	$37.2	$37.2	$37.2	$37.2	$37.2	$37.2	$37.2	$37.2	$37.2	$37.2	$37.2	$37.2
1.10	CISF Plans & Permitting	$0.8	$0.8	$0.8	$0.8	$0.8	$0.8	$0.8	$0.8	$0.8	$0.8	$0.8	$0.8	$0.8	$0.8	$0.8	$0.8	$0.8	$0.8
1.11	Shutdown Site Infrastructure	N/A	N/A	N/A	N/A	N/A	N/A	N/A	N/A	N/A	N/A	N/A	N/A	N/A	N/A	N/A	N/A	N/A	N/A
1.12 (new)	STAD Canister Design & Licensing	N/A	$12.9	$25.9	$25.9	$25.9	$12.9	$25.9	$25.9	$25.9	$12.9	$25.9	$25.9	$25.9	$12.9	$25.9	$25.9	$25.9	$25.9
2.0	Phase I : Receive Canistered UNF in TSCs	$58.5	$58.5	$58.5	$58.5	$58.5	$58.5	$58.5	$58.5	$58.5	$58.5	$58.5	$58.5	$58.5	$58.5	$58.5	$58.5	$58.5	$58.5
2.1	CISF Site Procurement & Construction																		
2.1.1	Rail Yard	$9.6	$9.6	$9.6	$9.6	$9.6	$9.6	$9.6	$9.6	$9.6	$9.6	$9.6	$9.6	$9.6	$9.6	$9.6	$9.6	$9.6	$9.6
2.1.2	Cask Mobile Lifting / Transfer Equipment	$9.6	$9.6	$9.6	$9.6	$9.6	$9.6	$9.6	$9.6	$9.6	$9.6	$9.6	$9.6	$9.6	$9.6	$9.6	$9.6	$9.6	$9.6
2.1.3	Cask Storage Pad (224 Casks)	$5.0	$5.0	$5.0	$5.0	$5.0	$5.0	$5.0	$5.0	$5.0	$5.0	$5.0	$5.0	$5.0	$5.0	$5.0	$5.0	$5.0	$5.0
2.1.4	Balance of Plant	$34.3	$34.3	$34.3	$34.3	$34.3	$34.3	$34.3	$34.3	$34.3	$34.3	$34.3	$34.3	$34.3	$34.3	$34.3	$34.3	$34.3	$34.3
3.0	Phase II : Receive Canistered UNF in TCs (DPCs/TCs)	$67.7	$102.9	$120.4	$91.6	$91.8	$102.9	$140.2	$105.4	$105.3	$102.9	$97.3	$75.8	$75.5	$102.9	$176.4	$141.1	$122.0	$61.7
3.1	CISF Site Procurement & Construction (Add'l for Phase II)																		
3.1.1	Cask Storage Pad (Remaining Casks)	$22.9	$58.1	$75.6	$46.8	$47.0	$58.1	$95.4	$60.6	$60.5	$58.1	$52.5	$31.0	$30.7	$58.1	$131.6	$96.3	$77.2	$16.9
3.1.2	Canister Transfer Facility	$33.8	$33.8	$33.8	$33.8	$33.8	$33.8	$33.8	$33.8	$33.8	$33.8	$33.8	$33.8	$33.8	$33.8	$33.8	$33.8	$33.8	$33.8
3.1.3	Cask Fabrication Facility	$6.6	$6.6	$6.6	$6.6	$6.6	$6.6	$6.6	$6.6	$6.6	$6.6	$6.6	$6.6	$6.6	$6.6	$6.6	$6.6	$6.6	$6.6

3.1.4	Balance of Plant	$4.4	$4.4	$4.4	$4.4	$4.4	$4.4	$4.4	$4.4	$4.4	$4.4	$4.4	$4.4	$4.4	$4.4	$4.4	$4.4	$4.4	$4.4
4.0	Phase III : Receive Canistered & Uncanistered UNF	$330.2	$330.2	$330.2	$330.2	$330.2	$330.2	$330.2	$330.2	$330.2	$433.3	$433.3	$433.3	$433.3	$525.4	$525.4	$525.4	$525.4	$330.2
4.1	CISF Site Procurement & Construction (Add'l for Phase II)																		
4.1.1	Pool Repackaging / Waste Handling Facility																		
5.0	Phase IV : UNF System Operations	$4,767.3	$17,948.4	$18,701.6	$18,495.7	$17,527.2	$18,187.1	$19,365.4	$19,023.5	$18,167.9	$18,478.6	$18,761.4	$18,725.1	$18,053.5	$22,046.2	$23,958.8	$23,673.3	$22,362.0	$17,872.6
5.1	UNF System Operations CD-4 (Start of Operations)	N/A	N/A	N/A	N/A	N/A	N/A	N/A	N/A	N/A	N/A	N/A	N/A	N/A	N/A	N/A	N/A	N/A	N/A
5.2	Cask Procurements - Remainder During Operations (except 5.2.4)	$814.6	$1,646.8	$2,440.3	$1,873.2	$1,504.8	$1,646.8	$2,863.4	$2,160.3	$1,782.1	$1,646.8	$1,981.4	$1,545.0	$1,160.1	$1,646.8	$3,627.0	$2,904.8	$2,142.7	$838.3
5.2.4 (new)	STAD Canister Transportation Cask Procurement (to CISF)	N/A	$0	$0	$0	$236.0	$0	$0	$0	$290.4	$0	$0	$0	$290.4	$0	$0	$0	$290.4	$290.4
5.3	Rail Car Procurements – Remainder During Operations	$242.0	$273.5	$462.5	$462.5	$378.5	$273.5	$462.5	$462.5	$410.0	$273.5	$462.5	$462.5	$410.0	$273.5	$462.5	$462.5	$420.5	$410.0
5.4	Transportation Services / Operations	$1,021.3	$934.7	$1,104.6	$1,052.9	$891.0	$934.7	$1,104.6	$1,052.9	$996.3	$934.7	$1,104.6	$1,052.9	$1,296.0	$934.7	$1,104.6	$1,052.9	$1,125.2	$1,354.2
5.5	CISF Facility Operations	$897.7	$711.0	$414.0	$585.0	$585.0	$711.0	$414.0	$585.0	$603.0	$711.0	$414.0	$585.0	$603.0	$711.0	$414.0	$585.0	$603.0	$630.0
5.6	State & Tribal Emergency Assistance (180(c))	$652.3	$652.3	$652.3	$652.3	$652.3	$652.3	$652.3	$652.3	$652.3	$652.3	$652.3	$652.3	$652.3	$652.3	$652.3	$652.3	$652.3	$652.3
5.7	CISF Facility Repackaging	$1,139.6	$13,369.2	$13,267.0	$13,508.8	$12,918.7	$13,539.4	$13,439.2	$13,681.0	$13,004.4	$13,814.3	$13,700.6	$13,981.4	$13,195.6	$17,373.5	$17,244.1	$17,561.3	$16,673.5	$13,251.5
5.7.1	CISF Facility Repackaging Operations		$1,188.2	$1,092.0	$1,333.8	$743.7	$1,188.2	$1,092.0	$1,333.8	$657.2	$1,379.8	$1,268.1	$1,548.9	$763.1	$1,559.1	$1,432.9	$1,750.1	$862.3	$819.0
5.7.2 (new)	STAD Canister Procurements	N/A	$12,181.0	$12,175.0	$12,175.0	$12,175.0	$12,351.2	$12,347.2	$12,347.2	$12,347.2	$12,434.5	$12,432.5	$12,432.5	$12,432.5	$15,814.4	$15,811.2	$15,811.2	$15,811.2	$12,432.5
5.8 (new)	Equipment for Shipments to Repository	N/A	$171.9	$171.9	$171.9	$171.9	$200.6	$200.6	$200.6	$200.6	$172.6	$172.6	$172.6	$172.6	$186.4	$186.4	$186.4	$186.4	$172.6
5.9 (new)	Transportation Operations to Repository	N/A	$189.1	$189.1	$189.1	$189.1	$229.0	$229.0	$229.0	$229.0	$273.5	$273.5	$273.5	$273.5	$268.1	$268.1	$268.1	$268.1	$273.5
6.0	Phase V : CISF Deactivation & Decommissioning	$289.8	$917.2	$622.3	$616.7	$617.6	$917.2	$679.8	$663.3	$663.1	$917.2	$548.5	$557.8	$556.7	$917.2	$775.8	$770.4	$715.2	$495.3
6.1	CISF Deactivation & Decommissioning		$401.5	$456.9	$363.2	$364.0	$401.5	$514.4	$409.8	$409.5	$401.5	$383.1	$304.3	$303.1	$401.5	$610.4	$516.9	$461.6	$242.7
6.2 (new)	Disposal of DPCs and TSCs	N/A	$515.7	$165.4	$253.5	$253.6	$515.7	$165.4	$253.5	$253.6	$515.7	$165.4	$253.5	$253.6	$515.7	$165.4	$253.5	$253.6	$252.7
	TOTAL CISF Life Cycle	**$5,960.1**	**$19,816.6**	**$20,305.5**	**$20,065.2**	**$19,097.8**	**$20,055.3**	**$21,046.6**	**$20,653.3**	**$19,797.4**	**$20,449.9**	**$20,371.4**	**$20,323.0**	**$19,649.9**	**$24,109.5**	**$25,967.3**	**$25,641.1**	**$24,255.6**	**$19,290.8**

7.0	Additional DPC Procurement Cost[38]	N/A	$5,604.0	$0	$1,409.6	$1,411.2	$5,604.0	$0	$1,409.6	$1,411.2	$5,604.0	$0	$1,409.6	$1,411.2	$5,604.0	$0	$1,409.6	$1,411.2	$1,396.0
	TOTAL CISF Life Cycle Plus Additional DPCs		**$25,420.6**	**$20,305.5**	**$21,474.8**	**$20,509.0**	**$25,659.3**	**$21,046.6**	**$22,062.9**	**$21,208.6**	**$26,053.9**	**$20,371.4**	**$21,732.6**	**$21,061.1**	**$29,713.5**	**$25,967.3**	**$27,050.7**	**$26,666.8**	**$20,686.8**

[38] Cost of purchasing DPCs above the minimum estimated for Task Order #12 Scenarios 2, 6, 10, and 14 (3,308) – these scenarios result in the fewest DPCs requiring repackaging. Costs for storing SNF in DPCs/TSCs at reactor sites have been borne by the utilities and reimbursed from the Judgment Fund.

Figure 4-24. Summary of Scenario Costs

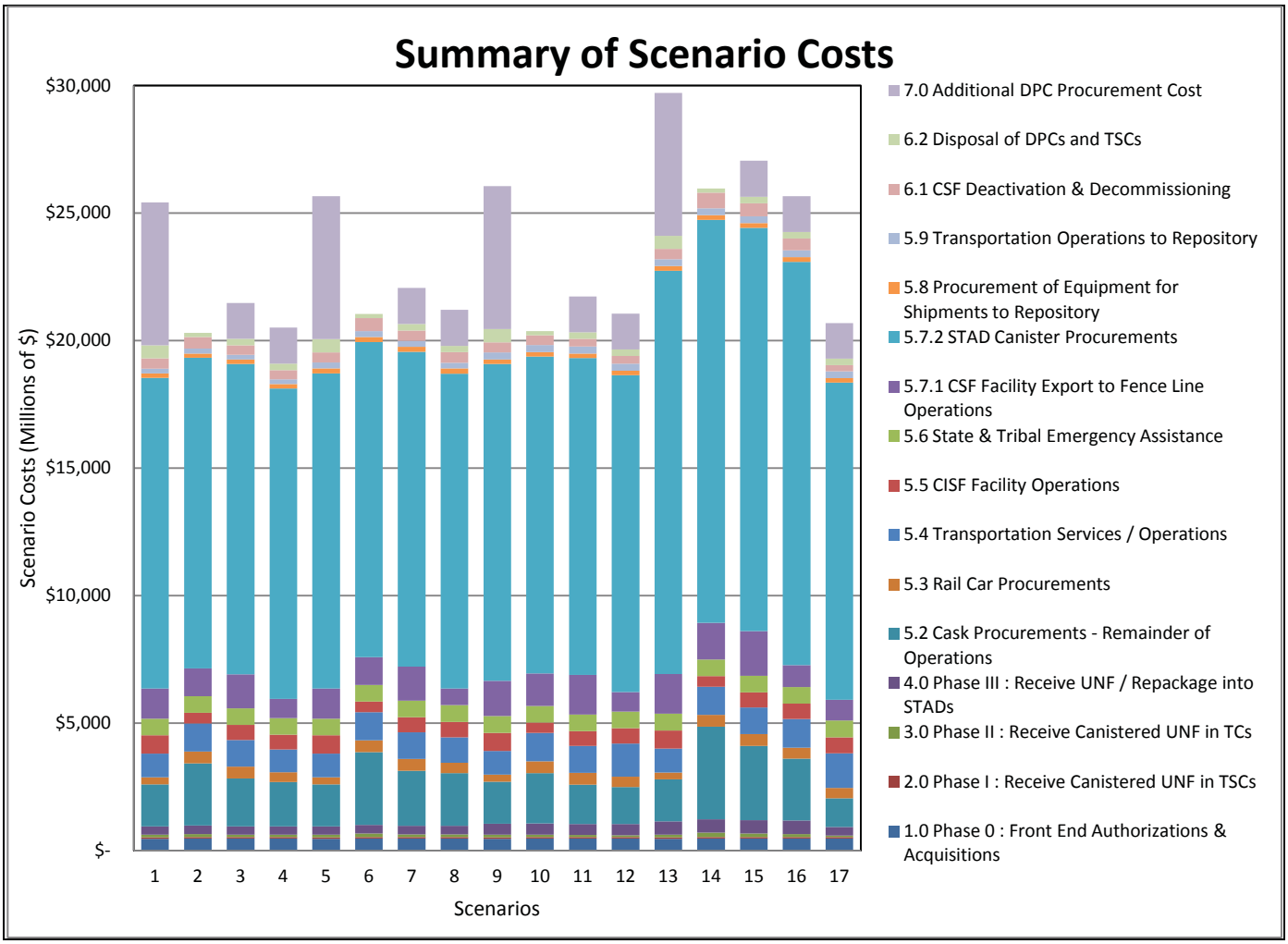

4.5.5.5 Cost of Purchasing DPCs and TSCs for Storage of UNF at Reactor Sites

The Office of Nuclear Energy has recently stated that cost considerations should include those costs paid for from the Judgment Fund, which includes the cost of UNF storage casks at each reactor's ISFSI. Our modeling estimates the number of DPCs and TSCs that will be loaded with UNF (and eventually unloaded and disposed) for each of the 17 scenarios. To assess the cost impact of those scenarios requiring more DPCs and TSCs, Cost Category/WBS Element 7.0 has been included in the analysis.

The "all DPCs/TSCs" scenarios (1, 5, 9, and 13) are estimated to result in over 10,300 DPCs and TSCs, compared to approximately 3,300 for the "accept bare UNF from shutdown and operating reactors" scenarios (2, 6, 10, and 14). The other scenarios, accept bare fuel or STAD canisters from shutdown reactors only, are estimated to result in ~5,000 DPCs/TSCs. Cost Category 7.0 is an estimate of the cost of "penalty" of loading "additional" DPCs instead of shipping bare fuel or loading into STAD canisters over and above the minimum estimated for scenarios 2, 6, 10, and 14. The "additional" cost to purchase DPCs/TSCs ranges from $1.4 to $5.6 Billion.

Please note that the "minimum" number of DPCs/TSCs is dependent on when STAD canisters are available for loading and when the CISF is operational. Also, this analysis does not account for all of the costs for which the Judgment Fund is liable.

4.5.5.6 Major Findings

The following are the major findings determined from the evaluation of the life-cycle cost impacts of the use of STAD canisters.

1. The largest cost driver is the purchase of the STAD canisters. The total cost of the STAD canisters purchased for loading at the CISF ranges from $12 to $16 billion. Purchase costs of the final waste packages were not included in the Task Order 11 cost estimate so a direct comparison is not available. STAD canister costs now comprise ~50-60% of the life-cycle costs included in this study.
2. The next largest cost driver is the cost of the storage casks at the CISF. The cost of manufacturing these storage casks at the CISF has increased significantly from the Task Order 11 cost estimate, primarily as the result of using a repository opening date of 2048, as defined in the DOE Strategy, and therefore having to store UNF for a longer time and needing more storage casks as a result. Life-cycle costs range from $800 million to $2.9 billion, with the operational scenarios where bare UNF and DPCs/TSCs are shipped to CISF from both operating and shutdown reactors (Scenarios 2, 6, 10, and 12) resulting in the most canisters being stored at CISF, and the need for the most storage casks.
3. The lowest life-cycle cost "Cask Acceptance" parameter across each Operations Acceptance parameter is "STAD canisters loaded at reactors". This is primarily driven by the lower cost of repackaging operations since the UNF arriving in STAD canisters at the CISF will not have to be repackaged. The cost difference versus the base case ("DPCs/TSCs") for 24 PWR/68 BWR STAD canisters is $719 M, for 21 PWR/44 BWR STAD canisters is $258 M, and for 12 PWR/32 BWR STAD canisters is $800 M. For the 4 PWR/9 BWR STAD canisters the "STAD canisters loaded at reactors" cost is actually $143 M higher than the "DPCs/TSCs" case, principally due to the cost of storing the smaller STAD canisters.
4. The lowest life-cycle cost "STAD Canister Size" parameter is the 24/68 STAD canisters, while the 4 PWR/9 BWR STAD canisters are the most expensive. The life-cycle cost of using 12 PWR/32 BWR STAD canisters is only slightly higher than the 24 PWR/68 BWR STAD canisters.
5. The life-cycle cost differences between "Operations Acceptance" parameters of "Shutdown + Ops" versus "Shutdown Only" are very small, with "Shutdown Only" being the lower cost parameter for all of the "Bare UNF + DPCs/TSCs" Cask Acceptance parameters. This difference is primarily driven by needing fewer storage casks at the CISF.
6. When considering the purchase cost of DPCs and TSCs paid for from the Judgment Fund, the "additional" cost above the ~3,300 minimum number of DPCs/TSCs (Scenarios 2, 6, 10, and 14) ranges from $1.4 to $5.6 Billion. These costs are shown as Cost Category/WBS Element 7.0 in Table 4-16 and Figure 4-24.

4.6 Total System Gap Identification

The impetus for gap identification emanated from a Task Order 12 workshop presentation addressing the impact of reflooding in licensed cask storage systems and increased burnup on fuel storage and transportation, and subsequent waste management operations. NRC regulations and regulatory guidance, technical reports by domestic and international entities and cask and utility vendor final safety analysis reports were examined, which identified a thread of system-wide gaps. Consequently, it was determined that performing a total system gap identification was necessary to support the Task Order 12 work.

The following sections discuss the process of gap identification, our methodology on performing a total system gap identification relative to the Task Order 12 work, existing gaps already identified by various agencies, new gaps we identified during the gap identification, and recommendations for the DOE.

4.6.1 Gap Identification Process

The systematic process of gap identification involves reviewing technical, procedural, and regulatory requirements for a given task or problem to identify any items that must be addressed in order to support a successful execution of a solution.

Over more than 30 years, collection, consolidation, processing, and disposal of spent nuclear fuel in the United States has been unsuccessful for a multitude of reasons, many of which were non-technical and institutional in nature, that could have been more easily facilitated and resolved if a total system gap analysis had been completed requiring risk evaluation and resolution of each gap prior to moving forward with a regulatory decision.

Lawmakers and regulators as well as industry must all have an accurate description of the gap, risk assessment, prioritization, process of resolving, and impacts of a “do nothing” scenario, in order to support an effective decision making process. A significant gap missed or not identified prior to project execution could result in excessive cost overruns, schedule delays, or negative health and safety consequences due to a multitude of errors or omissions that should have been addressed prior to project commencement.

4.6.2 Total System Gap Identification Methodology

A systems engineering approach is used to establish the technical bases and the total system gap identification process. Although not failsafe in identifying every gap that exists or that could result from a decision, the gap identification process is a critical step in evaluating utilization and implementation of a STAD canister for retrieval of spent nuclear fuel from existing stranded, shutdown, and operating stations, through transportation to a consolidated storage facility, for repackaging, as well as interim storage, and transportation to a repository for long term storage and disposal.

Since the evaluation of disposal of UNF has been ongoing for many years, a multitude of total system gap identification analyses have been performed by various entities, including different U.S. and international government agencies and private industry coalitions.

The methodology used to perform total system gap identification for a STAD canister was to first develop a total system flowchart outlining the current regulatory direction for collection from various operating or shutdown sites through disposal at the repository. Next, existing

studies and gap identification reports were reviewed. Additionally, the work on Task Order 11 and Task Order 12 to date was reviewed, specifically for conducting research and development needed to address technical and non-technical gaps. Finally, a table was created, listing mostly new non-technical total system gaps that were identified.

For purposes of the total system gap identification, technical and non-technical gaps are not separated as it was decided that all gaps should be assessed together as part of the total system gap identification process.

4.6.3 Existing Gaps Already Identified

As previously mentioned, various reports developed by the IAEA, DOE, NRC, U.S. Nuclear Waste Technical Review Board (NWTRB), and the Electric Power Research Institute (EPRI) were reviewed and Table E-1 (see Appendix E) was developed which lists existing gaps that have already been identified by these various entities.

However, due to the overlapping nature of gap identification from separate technical reports, FCRD-USED-2012-000215/PNNL-21596 prepared for the DOE, was used, to parse gaps that overlap with other gaps or were deemed to be insignificant for inclusion in Table E-1.

It is recognized that as additional data are gathered and predictive models are developed to address existing gaps, the priority of identified gaps may change, or new gaps may be identified.

The existing gaps for the SSCs were sub-divided into 10 different categories as listed below:

- Cross-Cutting
- Fuel
- Cladding
- Assembly Hardware
- Baskets
- Neutron Poisons
- Neutron Shields
- Bolted Cask
- Welded Canister
- Concrete Structures

Each gap was then cross-referenced to the corresponding management phase that it will influence. The management phases are as follows:

I. Utility and Stranded Site Loading and CISF Repackaging Operations;

II. Transportation;

III. Interim and Long Term Storage.

This step was important for the main purpose of evaluating impact on the process of assessing development of a STAD canister as each decision could be impacted differently based on the total system management phase.

4.6.4 New Gaps Identified

After reviewing all existing gaps previously identified, research and development opportunities discussed during the Task Order 11 and 12 workshops, and Team evaluations, a total system gap identification flowchart was created with an associated table, which lists the new gaps identified (see Table E-2 in Appendix E).

Table E-2 was constructed mainly to identify at a higher level those gaps, applicable to the development of STAD canisters, and aligned by management phase, which, were not identified for further study by the IAEA, DOE, NRC, NWTRB, or the EPRI.

This list of new gaps is not all encompassing but the most important point to note is that almost all of the new gaps identified are non-technical. They are broken into the following categories:

- Equipment
- Hardware
- Process
- Miscellaneous

Since the work on Task Order 12, similar to that of Task Order 11, is primarily process related, most of the new non-technical gaps relate to procedural and regulatory issues as well as equipment gaps in supporting the different handling, transportation, repackaging, interim, and long term storage and disposal management phases. These results highlight the value of utilization of total system gap identification for Task Order 12.

4.6.5 Conclusions and Recommendations

In order to successfully develop a direction for retrieval, transporting, storing, and disposing of spent nuclear fuel in the United States, total system gap identification is of critical importance to the process of developing a comprehensive plan for managing spent nuclear fuel. Numerous studies have already been performed by a multitude of government, international, and domestic industry coalitions identifying gaps.

It is recommended that the already existing gaps identified should be assessed, evaluated for technical and operational risk, and prioritized for gap closure based on significance of resolution, as well as in terms of a “do-nothing” scenario, with overall impact to the total spent fuel disposal system. A direction needs to be determined on resolving each existing identified gap, either in the form of additional research, clarification required, or by evaluation of why a “do nothing” approach is low risk and acceptable.

Furthermore, the DOE could expand on the work included within our identification of new non-technical gaps, and perform a specific total system gap identification study to identify any new procedural, regulatory, equipment, hardware, process, or miscellaneous related gaps. These should then be assessed, evaluated, and prioritized as with the already existing gaps discussed previously.

In order to perform assessments of existing gaps, prioritization for gap closure, and further study of process, equipment, hardware, or miscellaneous gaps, lessons learned elsewhere should be studied, for different used and spent fuel applications, which may not be directly applicable to the U.S. disposal problem, but could provide benefit in sharing technical or procedural

knowledge in order to determine the best solution for retrieval, transportation, consolidation, repackaging, and disposal of UNF.

In conclusion, the total system gap identification performed for Task Order 12 resulted in a determination that technical gaps have been adequately identified but that further work should be performed to identify, assess, evaluate, and prioritize non-technical gaps and the effect that they will have on the total spent fuel disposal system.

5 Research and Development to Support Concepts

It is recognized that the National Laboratories are actively working on disposal concepts and thermal load management analysis for a geologic repository, in addition to evaluating the direct disposal of DPCs; the outcome of which will influence canister sizing, configuration and deployment of a future STAD canister system.

During the course of this feasibility study, the Team identified the following R&D opportunities associated with the total spent fuel management system:

Standardized Transportation Casks

- Incentivize development of one cask design per vendor that could handle all of the canisters that vendor has licensed and sold. With the innovative use of spacers, sleeves and other adjustments, this could significantly reduce the inventory requirements as well as the size and complexity of the cask maintenance facility.
- The use of fewer, large cask designs that could accommodate all canister sizes would increase actual shipping costs. This is because using a large and heavy transport overpack to ship a small canister would increase the number of tons involved in each shipment and rail shipping rates are based on ton-miles shipped. Part of the R&D effort should be a full cost analysis of the transportation system to identify an optimal approach from the cost perspective.

Standardized Auxiliary Equipment for Dry Storage Systems

- Incentivize development of the following standardized auxiliary equipment (see Appendix B, Item 9 (Task 9) for background) that could potentially be used with multiple canister/cask systems:
    - Multi-canister welding machine (for two or more canisters in parallel)
    - Multi-canister drying system (for two or more canisters in parallel)
    - Helium fill equipment
    - Leak test equipment
    - Canister opener (welded and mechanical)
    - Air pallet system
    - Single-failure-proof crane system
    - Lift slings

Repository Characteristics:

- Conceptual designs of passive engineered heat dissipation systems for a repository; i.e. open or closed piping system using air, gas, water, etc. to dispose of excess heat generated so as to facilitate usage of large STAD canisters.
- Develop a list of general probable repository geology characteristics based on past research, international experience, and current knowledge to assist in licensing and design of three STAD canister types.
- Clarify the impact of waste package emplacement heat limits on logistics analysis for various repository scenarios to influence more accurate cost analysis of transportation costs. Note. As discussed in Section 4.5, repository waste package emplacement heat limits (and any required aging of UNF) can have a significant impact on CISF to repository shipping rates.

DPC Disposal and STAD Canister Design:

- Clarify waste type for an empty DPC, associated waste quantity, and restrictions or requirements for possible recycling of DPCs, so as to minimize total system costs.
- Research opportunities for disposal of other wastes (GTCC and secondary) generated from the total UNF system using space in between multi-STAD canister cask systems.
- Identify disposal mechanisms for non-standard fuel from the South Texas Nuclear Generating Station and possible utilization of STAD canisters for new reactors such as Vogtle Electric Generating Plant and VC Summer Nuclear Generating Station (AP1000).

Utility Interface:

- Perform a survey of all utilities to determine 1) which would prefer to store on site until shutdown vs. shipping offsite during operations, or 2) which would prefer to ship bare SNF to the CISF for packaging.
- Investigate incentives to offer utilities standard contract amendments necessary to support on site storage, bare UNF shipment or onsite STAD loading scenarios.
- Audit and verify crane capacity and design of all U.S. operating nuclear plants to determine feasibility of loading medium, large, or multi STAD canister configurations.

6. Conclusions

In conclusion, the Energy*Solutions* team was tasked with providing the DOE with technical ideas and recommendations, supported by evaluations/analyses, on approaches to better integrate STAD canister concepts into the waste management system.

Key outputs from this study are:

1. Design concepts for small (4 PWR/9 BWR), medium (12 PWR/32 BWR) and large (24 PWR/68 BWR) STAD canisters have been developed and evaluated, as detailed in Section 4.1 and Appendix D.
2. Criticality evaluations of the STAD canister concepts were performed to provide reasonable assurance that they will be capable of satisfying the 10 CFR 71 criticality control requirements.

3. Structural evaluations of the STAD canister concepts were performed to provide reasonable assurance that they will satisfy applicable design criteria for the full range of on-site storage and transportation loading conditions as well as off-normal and accident conditions.
4. Shielding evaluations concluded that for similar UNF assembly burnup levels and cooling times, the exterior dose rates for the proposed STAD canister concepts should be very similar to those which apply for many commercial DPC systems. As a result, required assembly cooling times (for a given burnup level, etc.) for the proposed STAD canister concepts should be similar to those that apply for existing commercial DPC systems.
5. The thermal evaluation concluded that the thermal performance of the STAD canister concepts will be similar to or better than the thermal performance of currently existing large DPC systems for storage and transportation.
6. Due to the small diameter of the small STAD canisters, it is possible to package multiple small STAD canisters in a storage and transportation overpack. For example, up to four small STAD canisters will fit within a large DPC-sized transportation cask having a 72-inch diameter cavity.
7. The limits on size and weight for storage casks are less stringent than those that apply for transportation casks. Therefore, storage casks with a larger internal cavity than those of any existing DPC systems may be used to store up to seven (as opposed to four) small STAD canisters. Noting that a set of 7 small STAD canisters was determined to not challenge the shielding or thermal capabilities of a typical storage cask.
8. Two STAD canister development schedules were developed and analyzed (see Section 4.4).
    i. A Baseline Case, which assumes that DOE will have a low tolerance for project scope risk associated with pursuit of canister designs before all repository requirements are understood. This results in an acceptance of higher life cycle waste management costs.
    ii. A Cost Optimized Case, which is an alternative approach to interim management of UNF pending the opening of a repository and assumes a greater acceptance of project scope and schedule risk associated with adding disposal licensing to the STAD canister designs after the initial designs for storage and transportation were completed and STAD canisters were fabricated. However, the return is an overall decrease in lifecycle costs associated with minimizing the procurement, repackaging and carcass disposal costs for DPCs, noting that is thought unlikely that any of the current generation of high burnup fuel stored in high capacity canisters will ever be eligible for direct disposal in the repository. Keys to the success of the Cost Optimized case are the following four pre-requisites:
        a. Design and licensing of all three STAD canister sizes (small, medium and large) before the repository host site is selected (as opposed to the Baseline Case where the STAD canister configuration is not established until the repository site is selected). The current large DPCs may become a viable extra-large STAD canister in the future, but that will take considerable work by the National Laboratories, so a STAD canister in that size range was not considered;
        b. Earlier construction of the spent fuel pool and wet repackaging capability at the CISF;

c. Contract negotiations with the utilities to support packaging bare UNF into STAD canisters after the plant ceases power production permanently;

d. Design and licensing of dry storage and transportation systems that can accommodate UNF in a STAD canister configuration.

Overall the two STAD canister development schedules analyzed by the Team each have advantages and disadvantages and as the side-by-side comparison shows (see Figure 4-9), the design and licensing of the STAD canister (at least for storage and transport) occurs much earlier in the Cost Optimized version of the schedule. The pool for repacking UNF into STAD canisters is also available much earlier in the Cost Optimized version. Neither version affects dates that the DOE established in its strategic response to the BRC recommendations.

In the Baseline Case, the capital costs for construction of major facilities at the CISF are spread out over a much longer time frame. This would reduce annual operating costs by delaying construction of the pool until needed to prepare STAD canisters for emplacement in the selected repository's engineered barrier system. The downside of this approach is that utilities will continue loading UNF headed for dry storage into large DPC dry storage canisters. Due to the heat load associated with their large storage capacity and the nature of their criticality controls, large DPCs are not likely candidates for direct disposal. Each of these expensive canisters purchased represents a large sunk cost that does not contribute to the permanent disposition of the waste.

The Cost Optimized approach accelerates the expenditure of capital funds on CISF facilities and makes a repackaging pool available much sooner than in the Baseline scenario. Design, certification and fabrication of STAD canisters also should occur much faster in the cost optimized scenario. This adds to both the capital and operating costs in the near term, but results in an overall decrease in life cycle costs. On the balance, this approach offers an accelerated shift to storage technologies that directly support disposal. This accelerated move to a storage solution that is integrated with final disposition of the waste could reduce life-cycle costs by $340 to $670 million, with a delta additional cost of $13.1 Million for the design and licensing of all three STAD canister sizes versus only one size (Baseline Case). This situation may be an admirable goal if budgets and legislation support accelerated implementation of a storage approach that is effectively integrated with disposal plans.

The life cycle cost savings are expected in three primary areas:

- <u>Fewer DPCs to purchase and load</u>

  Fewer DPCs will ultimately need to be purchased and loaded with UNF if design and licensing for three STAD canisters commences before final selection of the repository site. STAD canister design and licensing is expected to take approximately three years, with an upper schedule estimate of five years. If STAD canisters for loading are available three to five years earlier, 400 to 650 fewer large DPCs will need to be

purchased, respectively[39]. The cost savings from purchasing fewer DPCs could range from $320 - $520 Million[40].

- Fewer DPCs to dispose

  This STAD feasibility study has assumed that after the DPCs are unloaded they will have no future value and will have to be disposed. Having fewer DPCs to dispose will result in life-cycle cost savings of $20 to $32 Million.

- Fewer DPCs to unload and transfer fuel into STAD canisters at the CISF

  Operations at the CISF may or may not change significantly for the scenarios we have evaluated. When fewer DPCs need to be unloaded, life-cycle cost savings of $80 - $120 Million may be achieved.

Our conclusion is that the schedule for STAD canister development is highly dependent on DOE priorities and the level of project risk it is willing to accept, regarding early completion of STAD canister designs that could be affected by subsequent repository performance requirements. The schedule will also be affected by contract negotiations with the utilities, and on the timing for authorizing legislation. We have outlined one approach that optimizes on lowest overall cost to the waste management system, even though that approach incurs additional costs in the near term. As authorizing legislation is passed and DOE settles on its priorities, and establishes an overall risk mitigation plan for the full waste management system, there will be an opportunity to redefine the best schedule for STAD canister development under those new and better-defined constraints.

9. A logistical analysis of the three STAD canister options was performed using the TSM (see Section 4.5), with the overall intent of identifying advantages and disadvantages, solutions to overcoming the disadvantages, and evaluating the performance of the recommended approach of only retrieving UNF from reactor sites when the reactor(s) have been permanently retired. The analysis used a set of assumptions including waste stream, transportation cask fleet, storage casks, reactor sites, PISF/CISF and repository, to analyze seventeen operational scenarios, which were developed to cover variations in the following key parameters, noting that STAD canister loading at reactor sites was assumed only in scenarios where acceptance was limited to shutdown sites:

   - Reactor Operations Acceptance (accept from operating reactors or only from shutdown reactors)
   - Reactor Cask Acceptance (DPCs/TSCs, bare UNF then DPCs/TSCs, or STAD canisters loaded at reactors. then DPCs/TSCs)
   - STAD canister size

   It should be noted that a key assumption for acceptance from shutdown sites only is that they will be emptied of UNF within 30 years, which keeps the maximum annual acceptance rate at the CISF to less than 4,000 MT/year. If a maximum acceptance rate of 3,000 MT/year is

[39] These purchases will not impact what has traditionally been DOE's cost for the program because the utilities have been purchasing the DPCs, and then compensated for the purchase and storage of the DPCs from the Judgment Fund, a Department of Justice account. However, recent Office of Nuclear Energy policy is to evaluate the true life-cycle cost to the taxpayer, so these savings should be considered.

[40] The Life Cycle Cost analysis of the Total System Model scenarios in Section 4.5 does not include the purchase costs of DPCs.

desired for shutdown site only pickup, the maximum time for emptying sites would be increased to 40 years.

From the TSM logistical analysis the following advantages and disadvantages were identified:

i. In general, and as would be expected, decreasing STAD canister size increases the processing time at reactors, the number of shipments, the number of CISF storage casks required, the receipt and processing requirements at the CISF, and the radiation doses to workers and the general public. Transportation costs and CISF handling and storage costs are also increased as STAD canister size decreases. The counterpoint to these disadvantages is that, with the exception of the deep borehole disposal concept, a small STAD canister is considered to be the most flexible for the open mode (Shale Unbackfilled, Sedimentary Backfilled, and Hard Rock Unsaturated) and enclosed mode (Crystalline, Generic Salt Repository, Clay/Shale and Deep Borehole) disposal concepts currently being evaluated by the National Laboratories.

   a. For plant operations, the time to complete the packaging of a large STAD size canister is approximately four days (utilizing all 24 hours in a day). For medium and small STAD canisters these activities take approximately 10% and 20% less time, respectively; with the minor time savings coming primarily from shorter loading time (fewer assemblies to load) and canister lid welding time (takes less time to weld lids for smaller canisters). All other STAD canister activities require time that is approximately independent of the STAD canister size. This means that, to achieve the packaging capacity of a large STAD canister, the scenarios based on utilizing medium and small STAD canisters would increase the packaging time by approximately a factor of two and a factor of five, respectively.

   b. The loss of the economies of scale with the smaller STAD canisters, i.e. can't transport or store assemblies in the same unit quantities as the large STAD canister assemblies, is the driver for the increased transportation and CISF handling and storage costs. However, these impacts can be partially ameliorated for small STAD canisters (4 PWR/9 BWR and 12 PWR/32 BWR) by handling, transporting, and/or storing multiple STAD canisters at a time (4 PWR/9 BWR STAD canisters could be loaded, transported, and stored in multiples of four; 12 PWR/32 BWR STAD canisters could be stored in multiples of three).

   c. An estimate of the potential radiological impact of loading STAD canisters of different sizes was made using the worker dose results from the Yucca Mountain Environmental Impact Statement (EIS). The results in Table 4-7 show that compared with a base case where large capacity DPCs are loaded, the increase in dose (Person-Rem) is 2,640 Person-Rem for 12 PWR/32 BWR STAD canisters and 12,830 Person-Rem where single 4 PWR/9 BWR STAD canisters are loaded and handled. If 4 small STAD canisters can be loaded and handled at the same, which would require existing plant processes and equipment to be redesigned to be used for multiple STAD canisters in parallel (e.g., equipment used for draining, vacuum drying, and sealing), then the increase would be 1,710. This demonstrates how mitigating actions (in this case, equipment and operations changes) can reduce the radiological impact of loading smaller STAD canisters.

d. The radiological impacts of transportation from the reactor sites to the CISF were estimated from the analysis performed for the Yucca Mountain EIS. The results in Table 4-7 show that compared with a base case where large capacity DPCs are loaded, the increase in dose (Person-Rem) for 12 PWR/32 BWR STAD canisters is 3,060 for workers and 1,070 for the public. Assuming that four 4 PWR/9 BWR STAD canisters can be transported in one cask results in a smaller Person-Rem increase of 1,980 for workers and 690 for the public.

ii. Shipping UNF in bare UNF casks from reactor sites increases the number of shipments and transportation costs, but significantly shortens the receipt period and allows bare UNF received at the PISF/CISF to be loaded into STAD canisters for storage. This reduces wasteful investments in at-reactor storage systems that are not compatible with the repository system.

a. One of the main drivers for the increase transportation costs, which are around 15% higher, is the fact that the scenarios involving shipment of bare UNF or STAD canisters from reactors require significantly larger cask fleets than scenarios where DPCs are used as the primary mode of shipment. The increase in shipments is driven by the fact that the number of assemblies per shipment is lower for bare UNF casks and STAD canisters.

iii. Accepting UNF from shutdown reactors only, while increasing transportation costs, results in a shorter acceptance period and reduced storage costs at the CISF.

a. The increased transportation costs are due to the fact that by waiting for reactors to shutdown, UNF can be packaged into STAD canisters and for the small and medium STAD canisters it will take more transportation casks, rolling stock and number of shipments to transport the same volume as could be achieved using DPCs.

b. The shorter acceptance period is due to the fact that the UNF will be received in STAD canisters and will not require repackaging.

c. The reduced storage costs at the CISF are driven by the fact that the bulk of the UNF is delayed until after the repository is operational in 2048 and the UNF is received in disposal-ready canisters from the CISF. This can be seen in Figure 4-16, which shows the three basic shipment profiles from the reactor sites to the interim storage facility. For Scenario 1, all UNF is accepted in DPCs/TSCs. The Scenario 2 profile shows the impact of accepting bare UNF from the reactors once the repository starts operation; the bare UNF arriving at the CISF is in approximate equilibrium (in MT) with the STAD canisters being shipped to the repository until 2066. The Scenario 3 profile shows the impact of the receipt of UNF form shutdown sites only; since receipt of the bulk of the UNF is delayed until after the repository is operational in 2048, the buildup of UNF in storage is less than for the other scenarios.

iv. Repository waste package emplacement heat limits can have a significant impact on CISF to repository shipping rates.

a. Since the design of a future repository is not known, the impact of emplacement heat limits was not included in the logistics or cost analysis. However, to

demonstrate the potential impacts of an emplacement heat limit, a variation on Scenario 6 was run (bare UNF and DPCs/TSCs to CISF from operating and shutdown sites; 21 PWR/44 BWR STAD canisters to repository) with a waste package emplacement limit of 8 kW. The results showed that the duration of shipments to the repository were extended by about 20 years and CISF storage was extended by about 40 years, although the effect on the peak cask storage is small.

v. For scenarios involving acceptance of bare UNF or STAD canisters from shutdown reactors, the time frame for cleanout of reactor pools is consistent with the time frame that the pools would need to remain open to transfer all UNF to dry storage. Thus, a utility will not necessarily have to keep a pool open any longer if the approach of only shipping UNF from shutdown sites approach is followed.

vi. For the logistical analysis, it was assumed that high burn-up fuels are able to be transported in the future based on additional technical review, the receipt of burn-up credit and/or authorization to include moderator exclusion in transport package designs. If this authorization is not received, all high burn-up fuel would have to be packaged as damaged fuel, and that would greatly reduce the number of assemblies that could be transported per cask as well as increasing the waste management system costs significantly (more dual purpose canisters, more transport casks, procurement of damaged fuel cans, etc.). This potential cost impact has not been quantified as part of this feasibility study.

10. Major findings determined from the evaluation of the life-cycle cost impacts of the use of STAD canisters are:

i. The largest cost driver is the purchase of the STAD canisters. The total cost of the STAD canisters purchased for loading at the CISF ranges from $12 to $16 billion. Purchase costs of the final waste packages were not included in the Task Order 11 cost estimate so a direct comparison is not available. STAD canister costs now comprise ~50-60% of the life-cycle costs included in this STAD Feasibility Study.

ii. The next largest cost driver is the cost of the storage casks at the CISF. The cost of manufacturing these storage casks at the CISF has increased significantly from the Task Order 11 cost estimate, primarily as the result of using a repository opening date of 2048, as defined in the DOE Strategy, and therefore having to store UNF for a longer time and needing more storage casks as a result. Life-cycle costs range from $800 million to $2.9 billion, with the operational scenarios where bare UNF and DPCs/TSCs are shipped to CISF from both operating and shutdown reactors (Scenarios 2, 6, 10, and 12) resulting in the most canisters being stored at CISF, and the need for the most storage casks.

iii. As might be expected, the lowest life-cycle cost “Cask Acceptance” parameter across each operations acceptance parameter is “STAD canisters loaded at reactors”, then “DPCs/TSCs” (after adding in the cost of the STAD canister that had been assigned to the reactor). This is primarily driven by the lower cost of repackaging operations since the UNF arriving in STAD canisters at the CISF will not have to be repackaged. The lower cost is offset by the increased number of years of CISF operations, as the

four STAD canisters loaded at reactor scenarios assume the reactors are shut down before STAD canister loading.

iv. Again, as might be expected, the lowest life-cycle cost "STAD Size" parameter is the 24 PWR/68 BWR STAD canisters, while the 4 PWR/9 BWR STAD canisters are the most expensive. The life-cycle cost of using 12 PWR/32 BWR STAD canisters is only slightly higher than the 24 PWR/68 BWR.

11. Per the SOW, key items to be addressed regarding the feasibility of the STAD canister concepts and how this report has addressed them are, as follows:

i. *What standardized canister concept, if any, is most feasible to be pursued*?

The main recommendation is to not standardize on one STAD canister size at this time, but instead, until the repository is selected, maintain a multi-STAD canister approach comprising of a small (4 PWR or 9 BWR), medium (12 PWR or 32 BWR) and large (24 PWR or 68 BWR) configuration. It is recognized that moving to a small STAD canister design will provide maximum flexibility with regards to the future repository design. However, the cost (see section 4.6) of designing and licensing multiple STAD canister designs in advance of the repository selection, i.e. the cost optimized STAD canister development approach detailed in Section 4.3 is relatively low; therefore it isn't necessary to wait for a site to be selected.

Following an approach where the required STAD canister (or canisters) and the repackaging facilities are not designed, fabricated or constructed until the repository site is selected will spread out the capital costs for construction of major facilities at the CISF over a much longer time frame. The downside of this approach is that utilities will continue loading UNF headed for dry storage into large DPC dry storage canisters for a much longer period. Due to the heat load associated with their large storage capacity and the nature of their criticality controls, large DPCs are not likely candidates for direct disposal. Each of these expensive canisters purchased represents a large sunk cost that does not contribute to the permanent disposition of the waste and adds to the low level radioactive waste disposal burden.

ii. *If and when to transition to using standardized canisters, and where to deploy them within the spent fuel management system*.

As a means of overcoming the disadvantages associated with requiring operating utilities to package UNF into smaller canisters, it is recommended that UNF not be mandated to be removed from a site until it is shutdown and the reactor operations permanently ended. Requiring operating sites to package UNF into small or medium STAD canisters was found to be unattractive, because at least some and probably most utilities will consider that this operation will negatively impact reactor operations, due to the demands on their resources and the spent fuel storage pool. However, once an operating site is shutdown, the site operator will have flexibility for loading UNF from the pool into STAD canisters, or shipping bare UNF in casks for packaging at the Consolidated Interim Storage Facility or repository. In terms of the goals, objectives and benefits associated with following this recommendation, the following are provided for consideration:

a. Goals (what the program should achieve):

Goal #1: Minimize impacts on utility operators as they perform their primary function – producing electricity safely. Once plants are decommissioned, the goal of minimizing impacts on utility operators continues by releasing the site for sale, or reuse as soon as possible.

Goal #2: Minimize the wasted investment in storage systems that are not integrated into the overall disposal system.

Goal #3: Maximize the operating efficiency of the integrated waste management system by centralizing repackaging functions.

Goals # 1-3 are intended to create discernible mutual operational and financial benefits for the utilities and DOE. It is believed that the efficiency of the use of reactor site decommissioning funding will improve (from a present value perspective) by delaying plant physical decommissioning a period of 30 to 40 years after retirement of the reactor(s) and following this revised approach to used fuel management.

b. Strategies (how the goals can be met):

Strategy #1: No UNF in dry storage at ISFSI pads is removed from these nuclear sites until the plants are retired and deemed to be permanently shutdown. Bare UNF may be transported from pools at interested operating sites in transportation casks for packaging into STAD canisters at the CISF.

Strategy #2: DOE will remove the UNF in dry storage at existing shutdown sites when, as stated in the DOE UNF strategy document, operations at the Pilot Interim Storage Facility (PISF) begins in 2021.

Strategy #3: As plants shut down, cooperating utilities will load UNF from pools into STAD canisters. STAD canisters will be transported to the CISF for storage, or directly to a repository (depending on timing). Onsite storage at the utility will only be required if transportation resources are not available. As part of this approach, a sufficient quantity of licensed STAD canisters will be provided to licensee sites that volunteer to load UNF from their pools into STAD canisters after shutdown. The quantity of STAD canisters provided will be sufficient to move all UNF from site spent fuel pools within 15-20 years after unit retirement.

Strategy #4: All UNF will be removed from participating retired units within 30 to 40 years after retirement.

Strategy #5: Operating plants that express an interest in shipping bare UNF from their pools to the Consolidated Interim Storage Facility (CISF) for packaging into STAD canisters will be supported. Note. Per the DOE UNF strategy document, full packaging operations at the CISF are due to begin in 2025.

Strategy #6: To support these goals, the UNF shipment prioritization shifts to: (1) Remove UNF from currently decommissioned sites, (2) Remove bare UNF from pools at interested operating reactors for shipment to the CSF, (3) Remove UNF from retired site spent fuel pools in STAD canisters as the units retire, (4)

Remove UNF stored in dry storage from ISFSI pads as the units retire, and (5) Remove UNF from dry storage pads at operating reactors.

c. Benefits:

Benefit #1: DOE can honor the standard contract by taking bare UNF from utilities that choose to load it. DOE and utilities have the flexibility to negotiate which canistered fuel they take first.

Benefit #2: DOE does not interfere with nuclear utility operations without an invitation.

Benefit #3: It is believed that the above approach will be neutral or better from a decommissioning funding sufficiency perspective for the utilities. The combination of bare fuel shipments to a CISF for loading into STAD canisters (Strategy 1), and having utilities load fuel from spent fuel pools into STAD canisters after shutdown (Strategy 3), minimizes the amount of fuel loaded into DPCs and the significant costs (DPC procurement, DPC to STAD canister repackaging operations and disposal of DPC carcasses) associated with loading all UNF into storage systems that have no current disposition path.

Benefit #4: Performing all operations to repackage UNF from existing DPCs into STAD canisters at a central facility will improve efficiency and allow greater investments in standard equipment and processes with the economies of scale provided by a central location.

iii. What should be done with fuel already stored in non-standardized canisters?

The National Laboratories are investigating the direct disposal of DPCs. Preliminary analysis performed by the Team during the course of this feasibility study determined that potentially, and recognizing that disposal overpacks would be most likely be required, up to 30% of existing DPCs could be disposed of in a geologic repository based only on heat load generated. The options for repackaging the UNF from non-standardized canisters to STAD canisters are either to perform the repackaging in the purpose-built facility as part of the CISF or, when a site is shutdown, utilize the pool to perform repackaging before the pool is shutdown. Bringing the non-standardized canisters to the CISF, which will be designed and licensed to perform repackaging operations is the recommended option and avoids potential issues with performing repackaging operations in existing facilities that were not designed to perform these types of operation.

12. The SOW also requested that specific advantages and disadvantages be provided for each scenario, including any proposed innovative solutions to addressing the disadvantages of using smaller STAD canister systems and an assessment of canister size limitations versus level of difficulty to overcome disadvantages/limitations.

From a practical perspective, the study concludes that requiring operating utilities to package UNF into small or medium STAD canisters will impact their operations from a standpoint of human resources, ALARA, operational risk and the demands on their spent fuel pools. However, as described above, an innovative solution would be to wait until sites are shutdown and their reactors permanently retired before utilizing the utilities human and equipment resources to load small STAD canisters. It is acknowledged that some operating

utilities may want to package UNF into smaller STAD canisters or even ship it to the CISF using bare UNF casks and these instances will need to be accounted for in a pick-up order that is focused around shutdown sites. Certainly, this Team has not polled every single reactor operator in the USA to determine if they would or would not be amenable to the use of small or medium STAD canisters. However, the input from Exelon and Sargent & Lundy (services over 100 domestic reactors) and the experience of NAC International as a major supplier of dry storage and transport systems in the USA, indicates that operating sites favor large capacity DPCs, which leads to the conclusion that requiring them to use smaller capacity canisters will impact their power producing operations. Once power producing operations cease, our input suggests many utilities may be interested and able to commit their time and resources for packaging bare UNF from pools into STAD canisters and the option should be given serious consideration.

From a logistical analysis perspective, the TSM was used to evaluate the STAD canister concepts and, as described above, advantages and disadvantages were identified, including innovative solutions to overcome the disadvantages, which included handling, transporting, and/or storing multiple STAD canisters at a time (4 PWR/9 BWR STAD canisters could be loaded, transported, and stored in multiples of four; 12 PWR/32 BWR STAD canisters could be stored in multiples of three). The analysis also showed that by accepting UNF from shutdown reactors only, while increasing transportation costs, results in a shorter acceptance period and reduced storage costs at the CISF. The reduced storage costs at the CISF being driven by the fact that the bulk of the UNF is delayed until after the repository is operational in 2048 and thus, there is a situation where UNF disposal containers are being shipped to the repository, as well as UNF arriving at the CISF to be repackaged or stored/aged pending disposal.

7 Recommendations

1. **CISF Licensing -** In order to address the licensing requirements for the CISF, it is recommended that DOE consider a series of pre-application meetings with the NRC to explore the limits of what can be done under current 10 CFR 72 licensing. The NRC is already discussing licensing needs for a combination of future storage, transportation and disposal needs. A new working group on these issues may be a good approach.
2. **STAD Canister Development -** To progress STAD canister development it is recommended that the DOE should submit topical reports on an integrated approach to meeting disposal and storage requirements for the selected STAD canister size. These topical reports would help map the process for adding disposability to the canister licenses as part of the overall repository engineered barrier system. Interactions with the NRC over those topical reports would be beneficial for both storage licensing and development of the engineered barrier disposal system.
3. **Total System Gap Identification -** The Team recommends that, in addition to previous work on technical gaps performed by the National Laboratories further work should be performed to identify, assess, evaluate, and prioritize non-technical gaps and the effect that they will have on the total spent fuel disposal system.

4. **Multi STAD Canister System Approach** - A multi STAD canister system approach should be maintained, i.e. the Cost Optimized STAD canister development approach, until the repository site is selected; pursuing the design and licensing of the following three sizes:
    - Small (4 PWR or 9 BWR)
    - Medium (12 PWR or 32 BWR)
    - Large (24 PWR or 68 BWR)
5. **UNF Collection** - UNF should not be mandated to be removed from a site until it is shutdown and the reactor facility permanently retired. Requiring operating sites to package UNF into small or medium STAD canisters will negatively impact operations due to the demands on their resources and the fuel storage pool. However, once an operating site is shutdown, the site operator will have flexibility for loading UNF from the pool into STAD canisters, or shipping bare UNF in casks for packaging at the Consolidated Interim Storage Facility or repository.
6. **Standardized Transportation Casks -** The diversity of canister designs making up the dry storage market creates some logistical and cost challenges for long term transportation operations. The transportation cask inventory will include impact limiters, skids and other ancillary equipment for 13 cask designs and at least 30 casks in storage representing 7 different cask designs. That collection of components represents $145 million in hardware. When the cost of maintaining and storing this inventory is added, this represents a significant expense for the waste management program. It is therefore recommended that an R&D project is undertaken to incentivize development of one cask design per vendor that could handle all of the canisters that vendor has licensed and sold. With the innovative use of spacers, sleeves and other adjustments, that could significantly reduce the inventory requirements as well as the size and complexity of the cask maintenance facility.
7. **Standardized Auxiliary Equipment for Dry Storage Systems -** An analysis of the auxiliary equipment associated with existing dry storage systems (see Appendix B, Item 9 (Task 9)), which will also be specific to future STAD canister systems, identified the equipment that could potentially be used with multiple canister/cask systems. A recommended R&D project is to incentivize development of this standardized auxiliary equipment:

8. References

10 CFR 50, "Domestic Licensing of Production and Utilization Facilities", *Code of Federal Regulations*, as amended.

10 CFR 60, "Disposal of High-level Radioactive Wastes in Geologic Repositories", *Code of Federal Regulations*, as amended.

10 CFR 63, "Disposal of High-Level Radioactive Waste in a Geologic Repository at Yucca Mountain, Nevada", *Code of Federal Regulations*, as amended.

10 CFR 70, "Domestic Licensing of Special Nuclear Material", *Code of Federal Regulations*, as amended.

10 CFR 71, "Packaging and Transportation of Radioactive Material", *Code of Federal Regulations*, as amended.

10 CFR 72, "Licensing Requirements for the Independent Storage of Spent Nuclear Fuel, High-Level Radioactive Waste, and Reactor- Related Greater than Class C Waste", *Code of Federal Regulations*, as amended.

10 CFR 961, "Standard Contract for Disposal of Spent Nuclear Fuel and / or High-Level Radioactive Waste", *Code of Federal Regulations*, as amended.

Advisory and Assistance Contract, Task Order 11, Final Report, *Development of Consolidated Storage Facility Design Concepts*, Energy*Solutions*, NAC International, Sargent & Lundy, TerranearPMC, Booz Allen Hamilton, Talisman International, Exelon Nuclear Partners, February, 2013.

Association of American Railroads, Standard S-2043, *Performance Specification for Trains Used to Carry High-Level Radioactive Material.*

Blue Ribbon Commission on America's Nuclear Future, 2012, *Report to the Secretary of Energy*, c/o U.S. Department of Energy, Washington, D.C.

DOE 2008. Transportation, Aging and Disposal Canister System Performance Specification, WMO-TADCS-000001.

DOE/EIS-0250, *Final Environmental Impact Statement for a Geologic Repository for the Disposal of Spent Nuclear Fuel and High-Level Radioactive Waste at Yucca Mountain, Nye County, Nevada*, February 2002.

DOE, A Monitored Retrievable Storage Facility: Technical Background Information, June 1991.

DOE/RW-0567, *Acceptance Priority Ranking and Annual Capacity Report.*

DOE 50040-UM-01.6.0, *User Manual for Total System Model.*

Implementation Plan for the Development and Licensing of Standardized Transportation, Aging, and Disposal Canisters and the Feasibility of Direct Disposal of Dual Purpose Canisters, Howard, R., J. Scaglione, J. Wagner, E. Hardin, and M. Nutt., 2012, FCRD-UFD-2012-000106. Oak Ridge, TN, U.S. Department of Energy.

Interim Storage of Spent Nuclear Fuel; A Safe, Flexible, and Cost-Effective Near-Term Approach to Spent Fuel Management. A Joint Report from the Harvard University Project on Managing the Atom and the University of Tokyo Project on Sociotechnics of Nuclear Energy. Published in 2001.

Los Alamos National Laboratory, MCNP – A General Monte Carlo N-Particle Transport Code, Version 5, April 24, 2003.

Memorandum of Understanding 44 FR 38690, July 2, 1979

NUREG-0554, *Single-Failure-Proof Cranes for Nuclear Power Plants*, U.S. Nuclear Regulatory Commission.

NUREG-0612, *Control of Heavy Loads at Nuclear Power Plants, Resolution of Generic Technical Activity A-36*, U.S. Nuclear Regulatory Commission.

NUREG-1536, *Standard Review Plan for Dry Cask Storage System*s, U.S. Nuclear Regulatory Commission.

NUREG-1617, *Standard Review Plan for Transportation Packages for Spent Nuclear Fuel*, U.S. Nuclear Regulatory Commission.

NUREG-2108, *Technical Evaluation Report on the Content of the U.S. Department of Energy's Yucca Mountain Repository License Application – Preclosure Volume: Repository Safety Before Permanent Closure*, U.S. Nuclear Regulatory Commission.

Oak Ridge National Laboratory Report No. ORNL/LTR-2012/448, dated September 28, 2012.

Sandia National Laboratories, August 2011, *Generic Repository Design Concepts and Thermal Analysis (FY11)*, Sandia Report SAND2011-6202.

Strategy for the Management and Disposal of Used Nuclear Fuel and High-Level Radioactive Waste, January 2013, c/o U.S. Department of Energy, Washington, D.C.

Transportation, Aging and Disposal Canister System Basis of Specification Requirements Document, Bechtel SAIC LLC, 2008, 000-30R-MGR0-01400-000-001.

U.S. Department of Energy, Office of Nuclear Energy, Task Order 11 Statement of Work, *Development of Consolidated Storage Facility Design Concepts*.

U.S. Department of Energy, Office of Nuclear Energy, Task Order 12 Statement of Work, *Standardized Transportation, Aging and Disposal Canister Feasibility Study*.

U.S. Department of Energy, Office of Used Fuel Disposition, July 2012, *Review of Used Nuclear Fuel Storage and Transportation Technical Gap Analyses*, FCRD-USED-2012-00215/PNNL-21596 Rev.2.

U.S. Department of Energy, Office of Used Fuel Disposition, November 2012, *Repository Reference Disposal Concepts and Thermal Load Management Analysis*, FCRD-UFD-2012-00219, Rev.2.

Appendices

CONTENTS

APPENDIX A – Results from Phase 2 Facilitated Workshop, Chicago, IL, October 30th to November 1st, 2012 148

APPENDIX B – Results from Phase 3 Facilitated Workshop, Columbia, MD, January 22nd to January 24th, 2013..... 159

APPENDIX C – Cross-reference between Task Order 12 Statement of Work and the STAD Canister Feasibility Study Report 191

APPENDIX D – STAD Canister Concept Drawings 196

APPENDIX E –Results from Total System Gap Identification..... 230

APPENDIX A – Results from Phase 2 Facilitated Workshop, Chicago, IL, October 30th to November 1st, 2012

The Phase 2 workshop was held from October 30th to November 1st, 2012, at Sargent & Lundy's offices in Chicago, Illinois, and was attended by representatives from all of the companies comprising the team. The workshop was facilitated and followed the agenda shown below:

- Phase 1 Technical Presentations
- Establish Technical Framework
    - Finalize objectives for the workshop and the overall scope of work.
    - Identify functional criteria, constraints (e.g. regulatory, unknowns) and drivers (e.g. primary parameters for disposal) that apply to STAD canister development.
- Options Identification/Down-Select
- Confirm Options

Technical Presentations

During Phase 1 and in preparation for the Phase 2 workshop, each of the team partners was assigned specific study activities and the topics covered included:

- Current disposal canister designs in the U.S. and abroad.
- Thermal, corrosion and engineering constraints of various repositories that impact the viability of STAD canister design options.
- Lessons learned about the probabilistic licensing requirements for SNF disposal as an add-on to the deterministic requirements for transportation and storage.
- Assumptions and priorities for an operating STAD canister system
- Strategies for maximizing flexibility in transitioning to STAD canister systems in the future given the constraints at utilities.
- STAD canister drivers for reactor sites, transportation, and interim storage
- Lessons learned from the development of the Yucca Mountain TAD Canister System Basis of Specification Requirements Document.
- Regulatory requirements that impact disposal.

The information collected during Phase 1 was shared with the team via several presentations and key points were:

- A long period of time in surface storage, i.e. aging, offers a number of benefits because it allows the spent fuel to cool while keeping options for future actions open. Surface aging up to a period of 100 years at the Consolidated Storage Facility is considered to be an acceptable assumption.
- No new rulemaking is planned by the NRC for repository requirements thus, leaving 10 CFR 63, which was specific to the disposal of high-level radioactive wastes at Yucca Mountain, as the only point of reference for Task Order 12.
- DOE work is focused on generic disposal concepts and, ultimately, the geology of the consenting Host site will govern the type of repository that can be implemented.

- There are 4 basic disposal options: three mined (granite rocks, clay/shale, and salt) and one alternative (deep boreholes in crystalline rocks).
- To prevent the spread of radioactive material, the disposal option will rely on engineered barrier systems, e.g. waste package, backfill, liner and seals, and natural systems, e.g. host rock, in conjunction with disposal system environmental modeling and thermal load management.
- Required surface aging times for waste packages containing multiple fuel assemblies are hundreds of years longer for clay and granite host rock compared with salt host rock, when the number of fuel assemblies is greater than 4 PWR. See graph below.

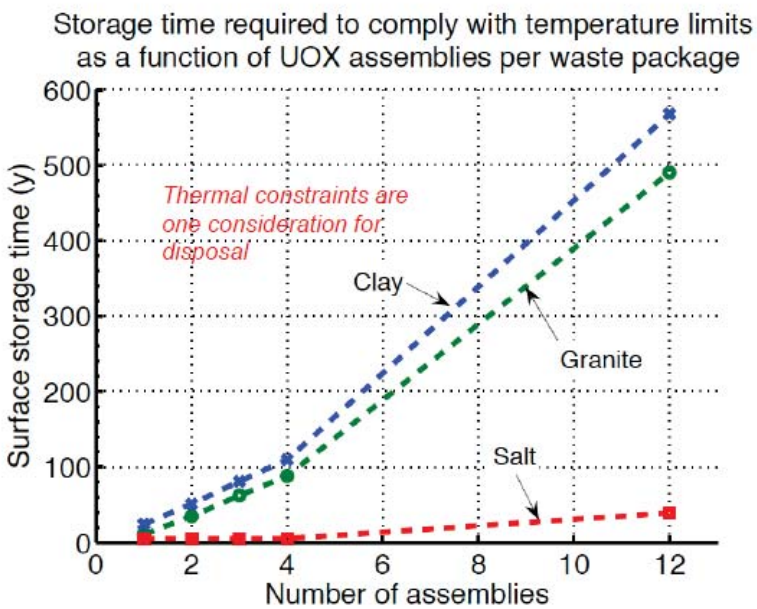

Source: *Generic Repository Design Concepts and Thermal Analysis (FY11)*, SAND2011-6202

- The disposal challenges for the STAD canister are: undefined regulatory standard, thermal loading, size restrictions and weight restrictions.
- The choice of repository environment affects either the period of time needed for cooling before emplacement, or the size and content of the disposal package.
- Comparing canister capacities, existing dry storage cask systems range from 24 to 37 PWR assemblies and 52 to 89 BWR assemblies. The Yucca Mountain TAD was 21 PWR or 44 BWR assemblies. For the Generic Repository Design Concepts (ref. FCRD-UFD-2012-0021), the disposal container sizes are 1 PWR / 1 BWR for deep bore hole, 4 PWR / 9 BWR for mined crystalline and mined clay/shale, and 4+ PWR / 9+ BWR for mined bedded salt.
- Lessons learned from the Yucca Mountain TAD Canister System Basis of Specification Requirements Document are:
    - Flexibility in Design Basis

        - Performance requirements should provide flexibility in STAD canister SNF design basis (i.e., approved contents), and be chosen by the vendor, so long as the characteristics are bounded by the limits, (e.g., less than 80GWd/MT burnup, less than 5% initial enrichment and no less than 5 years out-of- reactor cooling time).
    - Performance requirements should be non-prescriptive with respect to specific design features.
    - Performance-based requirements should allow maximum flexibility and potential for innovation.
    - Performance requirements should be neutral on site locations and storage/disposal media.
    - Considerations for Task Order 12 study
        - Evaluate transferability/applicability of previous TAD work to STAD Task 12 considering disposal (media) unknowns.
        - Evaluate generic considerations in DOE TAD Specification that could be adapted in STAD.
        - Evaluate other generic TAD considerations that may be candidates for standardization.
        - Evaluate need for developing gap requirements in STAD context.
- Drivers for the STAD canister system include:
    - Features:
        - No of assemblies
        - Lifting interface
        - Spaces/Inserts
        - Criticality control approach
        - Damaged fuel capability
        - Closure detail
        - Materials
        - End shields
    - Properties:
        - System Size (diameter and length)
        - System Weight
        - Burnup/Enrichment/Cool Time (i.e., heat, radiation)
        - Fuel Type (PWR/BWR)
        - Qualified Fuel Designs

- Operating Plants (pool loading):

Driver	Impacts
Minimize operations disruption	Favors larger canister capacity
High enrichment & burnup	Favors smaller canister capacity
Take wide range of fuel types	May require spacers/inserts
Take damaged/non-standard fuel	Include damaged can option, or separate damaged fuel STAD canister
Avoid plant upgrades (crane capacity, floor loading)	May favor smaller canister capacity for some plants
Heavy loads access (rail/truck/barge access)	May favor smaller canister capacity for some plants
Minimize aging time for offsite shipment	Favors smaller canister capacity

- Decommissioned Plants (pool loading):

Driver	Impacts
High enrichment & burnup	Favors smaller canister capacity
Take wide range of fuel types	May require spacers/inserts
Take damaged/non-standard fuel	Include damaged can option, or separate damaged fuel STAD canister (may be key issue)
Avoid plant upgrades (crane capacity, floor loading)	May favor smaller canister capacity for some plants
Heavy loads access (rail/truck/barge access)	May favor smaller canister capacity for some plants
Minimize aging time for offsite shipment	Favors smaller canister capacity

- Operating/Decommissioned Plants (pad loading) – This scenario is only for at-site fuel recanning:

Driver	Impacts
Take wide range of fuel types	May require spacers/inserts
Take damaged/non-standard fuel	Include damaged can option, or separate damaged fuel STAD canister (may be key issue)
Heavy loads access	May favor smaller canister capacity for some plants

- Summary of key drivers from reactor sites:
  - STAD canister <u>accommodates most fuel types</u>
    - Will require a family of spacers/inserts and/or multiple STAD canister sizes.
  - STAD canister accommodates <u>failed/non-standard fuel types</u>
    - Will require damaged fuel cans (and the accompanying basket space) and/or dedicated failed fuel STAD canisters.
  - STAD canister <u>loading throughput</u>

        - Favors larger STAD canisters at the cost of longer required cooling times.

    - Transportation

Driver	Impacts
Minimize radiation exposure and accident probability.	Fewer shipments favors larger STAD canister capacity
Limit interchange restrictions (Plate B or C) to avoid/minimize routing restrictions.	Established max impact limiter dimension, and indirectly the STAD canister diameter.
10 CFR 71 HAC tests.	Typically controls canister structural design and internal pressure.
10 CFR 71 packaging dose rate limits	Favors smaller STAD canister capacity. Thick neutron shield required for HBU fuel. Must be sized to prevent "bottom-out" for HAC free drop test.
Transportation cask neutron shield temperature limits	Favors smaller STAD canister capacity. NS temp is driven by canister heat load. Trade-off required cooling time vs. STAD canister capacity.

    - Interim Storage
        - Do not see any significant STAD canister drivers coming from interim storage.
            - Most drivers are the same as from the utility plant sites.
            - Bare fuel cask shipments to be packaged in STAD canisters should not control since transport typically bounds heat loads.
            - Any unusual handling drop hazards would be best handled at the facility design vs. driving the STAD canister design (e.g. impact limiter pads, etc.)
        - Potential sources of STAD canister drivers:
            - If the aging term is significantly long (100-200+ yrs), then the STAD canister shell material/thickness may be impacted.

<u>Establish Technical Framework</u>

The objective statement developed by the team is shown below.

Perform a study for the feasibility of development and licensing of standardized transportation, aging, and disposal (STAD) canisters and casks that addresses the following statements and requirements from the Statement of Work:

- Repackaging of fuel from larger canisters into smaller ones for disposal may be required to avoid extensive surface decay storage, or to meet physical constraints on disposal systems, or because additional criticality controls are determined to be necessary.

- Provide technical ideas and recommendations, supported by evaluations/analyses, on approaches to better integrate storage (standardized canister concepts) into the waste management system. This includes, but is not limited to:
    - how can we standardize given the current situation described above, especially with respect to disposal unknowns;
    - should we carry different standardized canister sizes forward depending on disposal unknowns;
    - are there only certain elements of the total waste management system where standardization is feasible; thermal limits have been set, but are they really an issue, etc
- Coordinate with and get input from work that is being conducted by the UFD Campaign National Laboratories and Industry Support Contractors regarding the Systems Architecture work, ongoing generic geologic disposal evaluations, and Consolidated Storage Facility Design Concepts (Task Order 11). It will also require input from the nuclear utility industry and cask vendor community.
- Functional analyses should include evaluation of utility operational throughput needs associated with managing their spent fuel pools to maintain plant operations.
- Impacts on utility resources and ability to produce power must be minimized and eliminated where possible, in order to facilitate utility acceptance of standardized transportation, aging, and disposal canisters.
- The technical services includes technical ideas and recommendations supported by analysis and evaluation that are provided in a report format necessary to support a future DOE decision regarding the development and licensing of a standardized canister system.
- Produce a STAD canister Feasibility Report identifying, as a minimum:
    1) identification of STAD canister system scenarios considered (including canister sizes);
    2) overall impacts (including advantages and disadvantages) of each scenario;
    3) specific advantages and disadvantages of switching to a potentially smaller standardized canister (e.g., cost, time, dose, transportation, etc.) including how these advantages and disadvantages change with time of implementation;
    4) proposed innovative solutions, if any, to addressing disadvantages and an assessment of canister size limitations versus level of difficulty to overcome disadvantages/ challenges;
    5) feasibility/trade studies to address the following:
        a) if and when to transition to using standardized canisters,
        b) where to deploy them within the spent fuel management system,
        c) what standardized canister concept, if any, is most feasible to be pursued, and d) what should be done with fuel already stored in non-standardized canisters.

Included in this deliverable will be a recommended path forward regarding standardization with supporting rationale as well as identification of areas for additional research.

The functional criteria, constraints and drivers identified by the team are shown below.

a) Applicable Regulations
   i) 10 CFR 71: Transportation from reactor site to CSF, CSF to repository, and reactor site to repository
   ii) 10 CFR 72: Storage at CSF and/or repository
   iii) 10 CFR 63: Disposal (assume as surrogate)
b) Fuel Specification
   i) Accommodate 100% of standard commercial PWR and BWR fuel types, including intact, damaged, partial, MOX, stainless clad, with and without inserts
   ii) South Texas Project (Units 3 & 4 ABWR)/AP1000 fuel types not included
   iii) Burnup: ≤ 70 GWd/MTU for BWR, ≤ 80 GWd/MTU for PWR (per TAD Specification)
   iv) Initial Enrichment: ≤ 5.0 wt % ^{235}U
   v) Maximum decay heat limited by requirements for storage, transportation, and disposal
c) Yucca Mountain Transportation, Aging and Disposal (TAD) Canister specification requirements considered:
   i) Criticality: Neutron absorber plate material and geometry
   ii) Handling: Standard canister lifting interface
d) STAD canisters loaded/unloaded in fuel pool
e) Burn-Up Credit (BUC) criticality analysis for transportation (ISG-8 Rev. 3)
f) 100 year storage period prior to disposal
g) Minimize occupational radiation exposure by designing for As Low As Reasonably Achievable (ALARA).
h) Transportation overpack to satisfy AARS-2043 and Plate B/C requirements.
i) STAD canister system designs to be as generic/neutral as possible with respect to disposal media
j) Minimize or eliminate impacts on utilities to produce power

Options Identification/Down-select

To facilitate the identification of options, the team developed a chart showing the possible scenarios for the transfer of fuel from the utility site to the repository. Three charts were developed for small, medium and large STAD canister options, which are shown below:

Small STAD Canister Scenarios (4 PWR / 9 BWR)

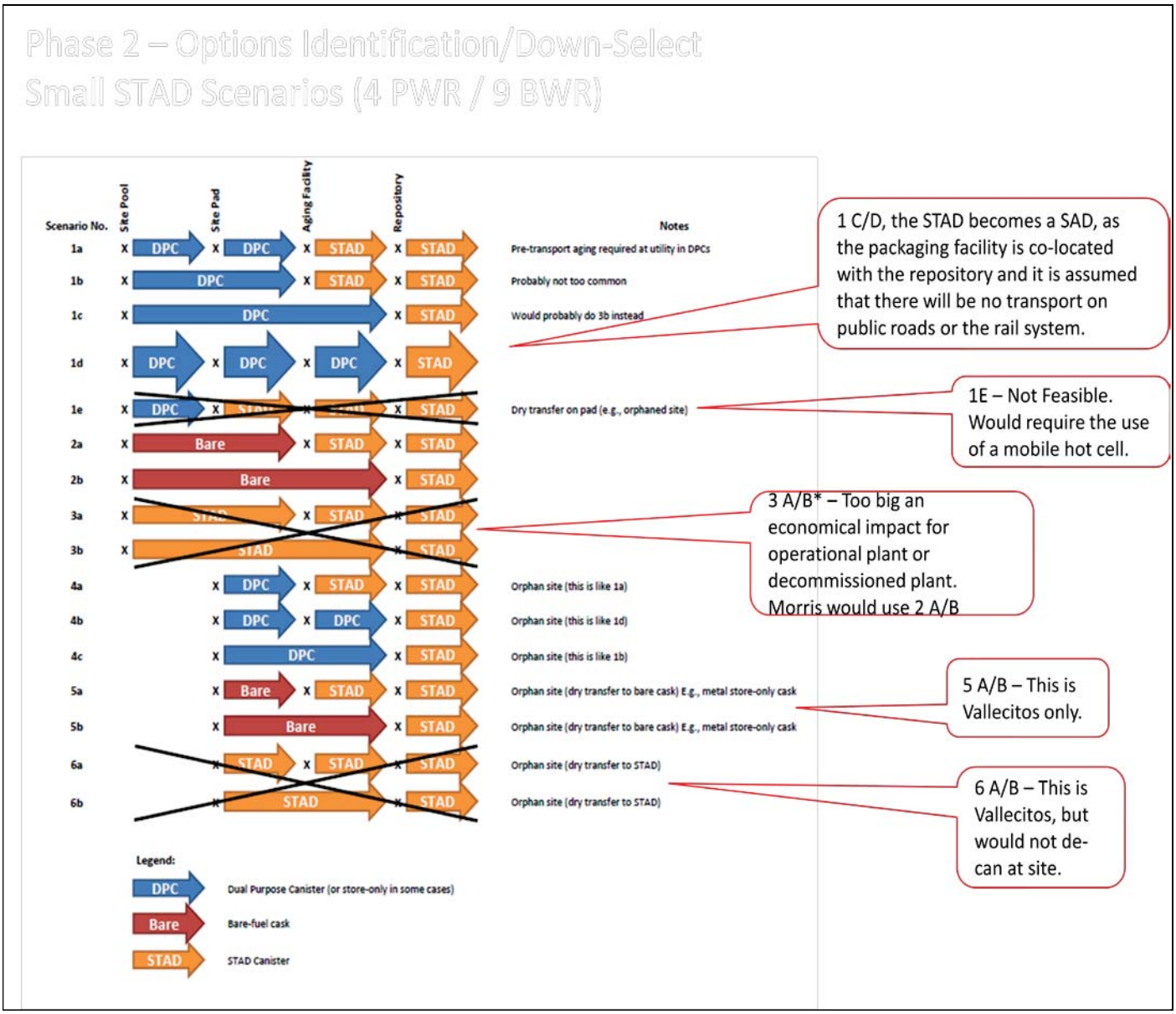

Medium STAD Canister Scenarios (21 PWR (Tuff) / 12 PWR (Salt))

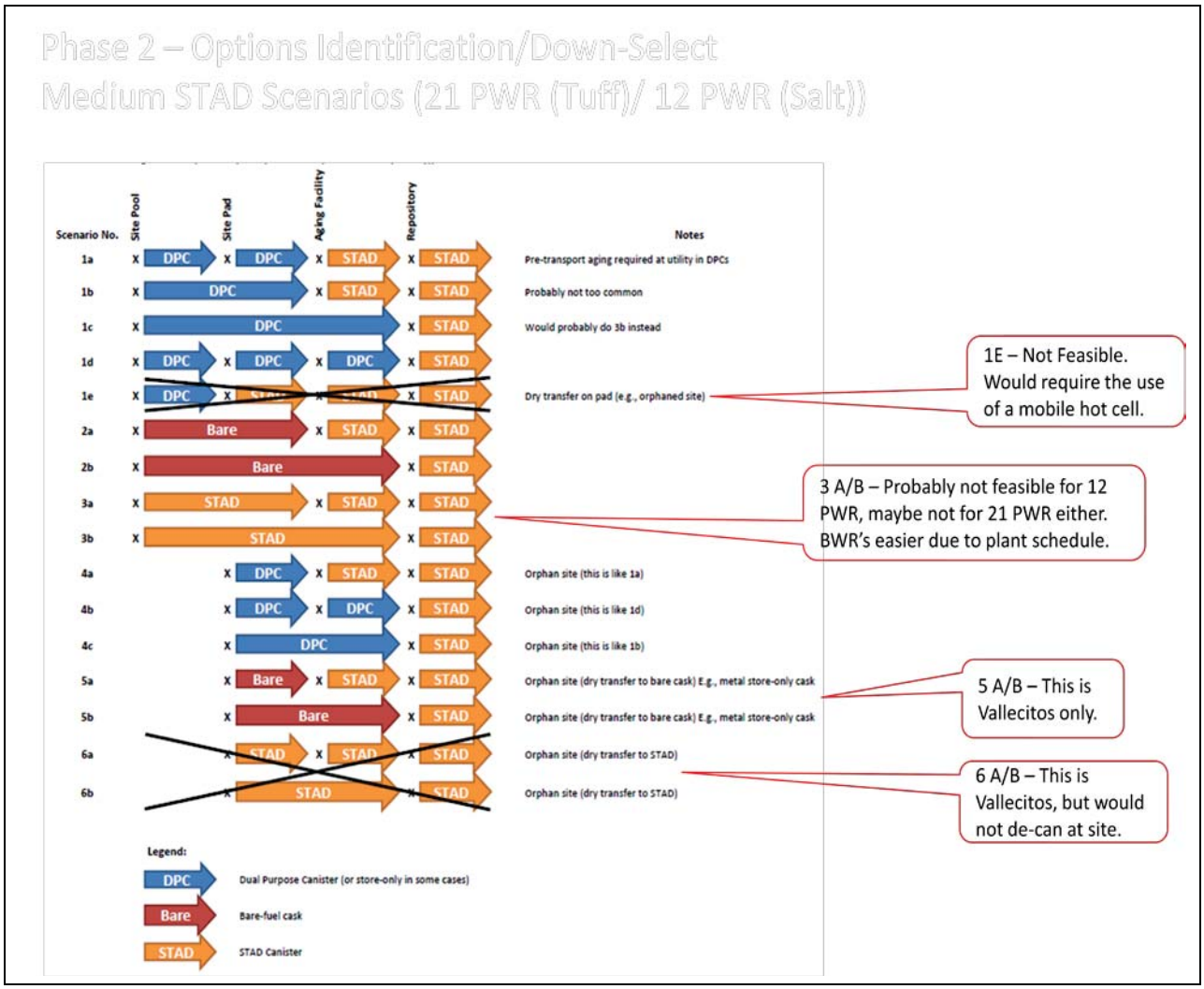

Large STAD Canister Scenarios (24 PWR / 68 BWR)

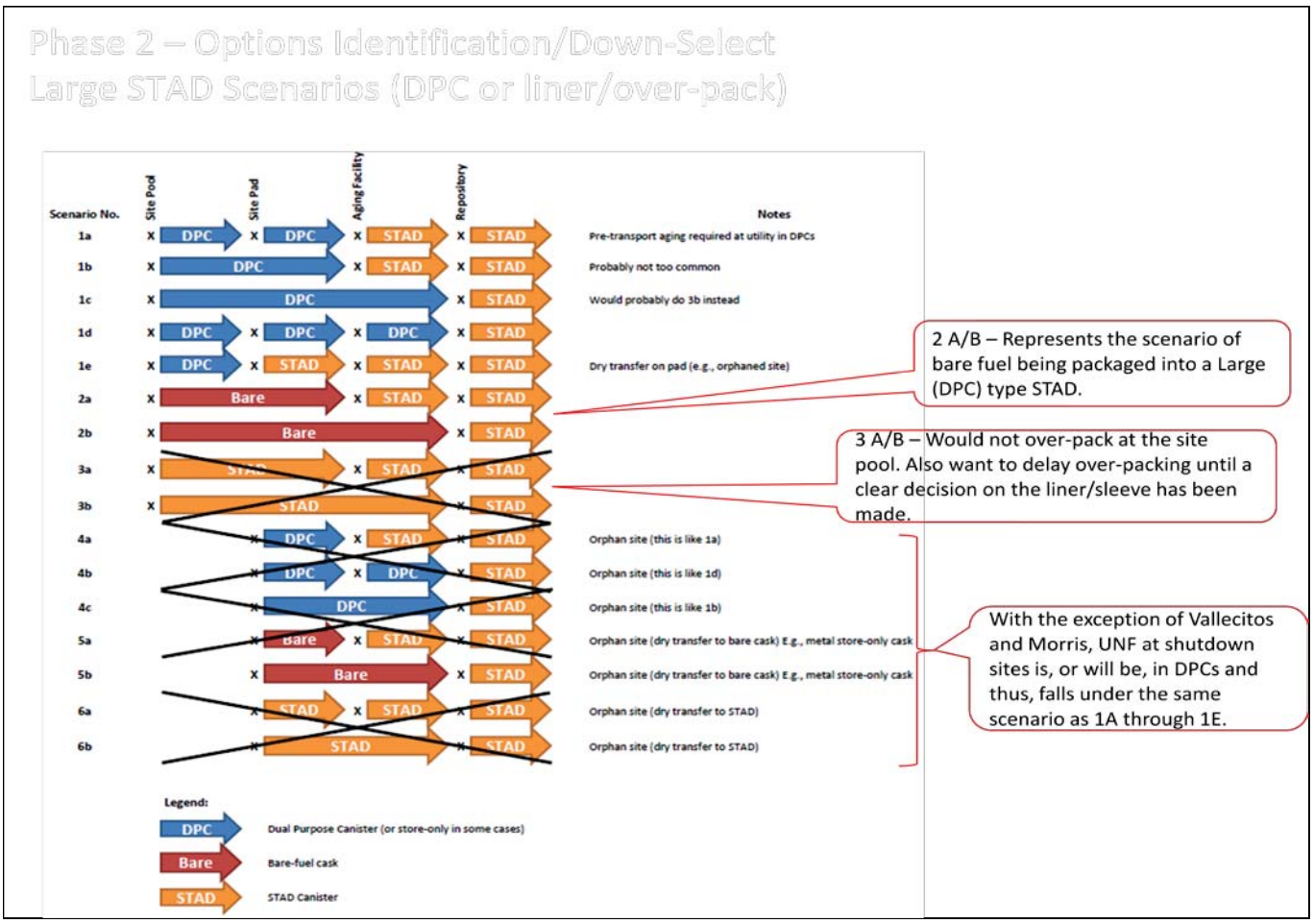

Confirm Options

Three sizes of STAD canister were confirmed which, together with their characteristics, are described below.

Small

- 4 PWR / 9 BWR elements
- Ability to handle failed fuel in integral damaged fuel canisters
- Transportation cask capable of transporting multiple small STAD canisters
- Part of concept may be storage of the carrier (analogous to “test tube” rack for damaged fuel cans) at the interim facility
- Top end shielding assumed
- Borated stainless for neutron poison

Medium

- 12 PWR / 32 BWR
- Ability to handle failed fuel in integral damaged fuel canisters
- Most likely one medium STAD canister per transportation cask
- Top-end shielding assumed

- Borated stainless for neutron poison

Large

- 24 PWR / 68 BWR or could be an over-packed DPC
- Ability to handle failed fuel in integral damaged fuel canisters
- Significant thermal issues and repository options to be evaluated for this STAD canister option
- Consider looking at waste over-pack extensions as a way to distribute heat flux
- Only over-pack when the repository media is known
- Significant issue with criticality control for disposal. Aluminum materials were not acceptable for disposal at Yucca Mountain
- Size and weight will be challenging with regards to canister handling and emplacement in the repository

APPENDIX B – Results from Phase 3 Facilitated Workshop, Columbia, MD, January 22nd to January 24th, 2013

The Phase 3 workshop was held from January 22nd to January 24th, 2013, at EnergySolutions offices in Columbia, MD, and was attended by representatives from all of the companies comprising the team. The workshop was facilitated and followed the agenda shown below:

- Presentations of work completed during Phase 3 (Note. Details are provided below)
- Review key findings from the work completed in Phase 3 and determine if any of the three STAD canister sizes should not be considered during the remainder of the work on the task. (Note. See Section 3.3: "Phase 3 Workshop", for details).
- Planning for Subsequent Phases (Note. See Section 3.3: "Phase 3 Workshop", for details).

Technical Presentations

Section 3.3 details the key outputs from the tasks that were performed during Phase 3. The presentations from which these key outputs were derived are provided below.

1) Task 1: Evaluate logic mapping of small, medium and large STAD canister options to generic repository options.

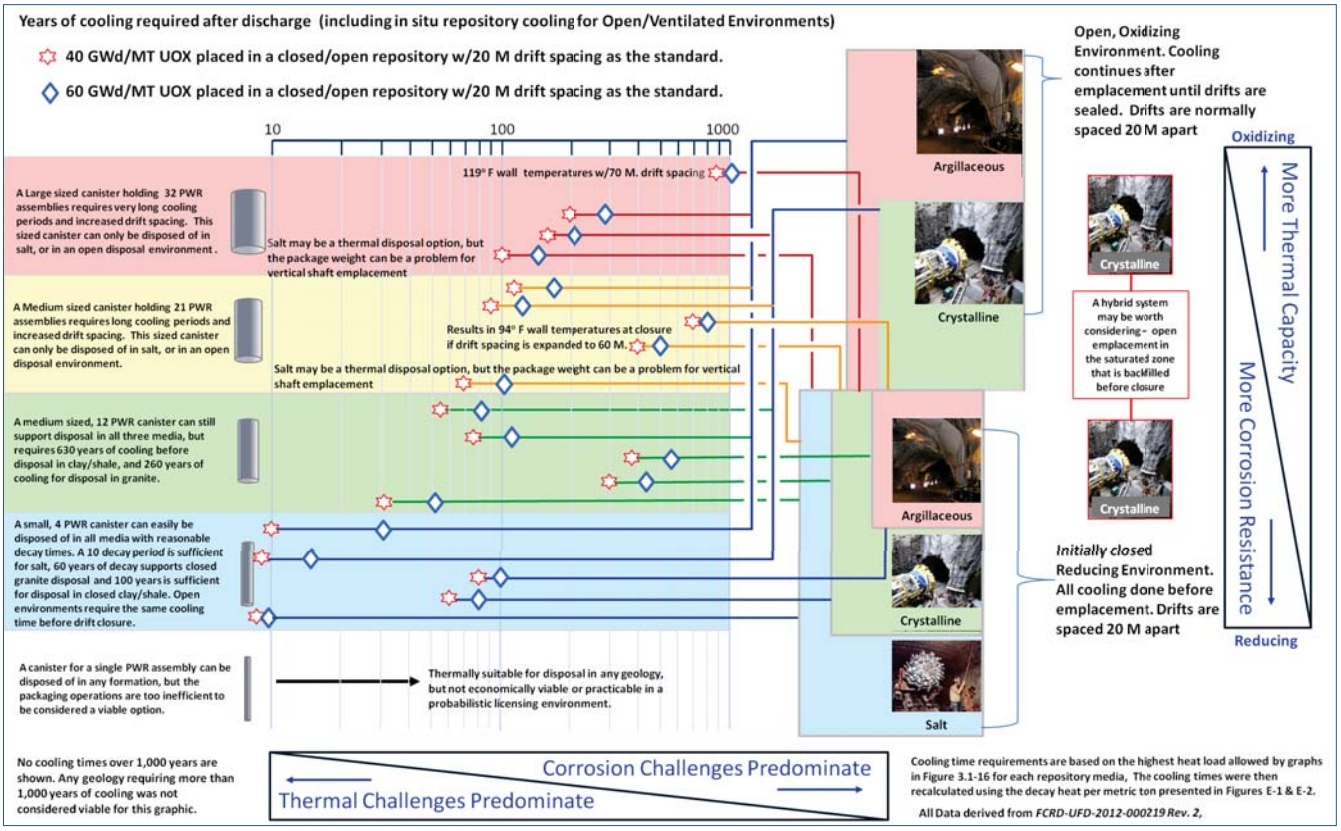

2) Task 2: Review history of MPCs and DPCs to identify any lessons learned that are applicable to the development of STAD canisters.

The Dry Storage Systems used have never been driven by Disposal Requirements

- Initial UNF storage was wet, based on initial experience with the weapons program.
- All UNF was expected to be recycled, so no long term storage was envisioned.
- When recycling was terminated in the US, a repository program was expected to take the waste before storage became an issue.
- When the repository program was delayed, expanding the capacity of spent fuel pools was far cheaper than dry storage, so that was the option selected.
- When it became clear that even higher capacity pool storage would not meet the storage requirements without building new, or larger pools, dry storage became the best alternative.
- In 1974, the AEC published its Environmental Assessment in compliance with the new Environmental Protection Act of 1969. The EA considered both wet and dry storage options.

The First High Heat Load Dry Storage Systems weren't even for UNF

- Initial dry storage systems were below grade, dry well storage systems developed by ARCo at Richland for older, colder spent fuel from the weapons program.
- Storage of hotter HLW from weapons program reprocessing required more heat removal capacity than the dry well design offered. ARCo developed a technology that included a metal canister inside a concrete sealed cask with natural circulation cooling. This early design could handle heat loads of ~6 W/kg after 10 years of cooling. This was the genesis of all modern dry storage systems.]
- Absent disposal criteria, or any contractual driver for unifying canister designs, dry storage in canister based systems were developed around operating plants needs and the thermal and criticality management practices that could pass licensing muster.

There Have Been Several Attempts to Create Canisters that could be used For Storage, Transport and Disposal

- The 1982 NWPA required the NRC to develop generic licensing requirements for dry storage – this paved the way for a set of defined requirements for storage, transport and disposal
- DOE funded a Universal Canister (UC) Concept project with GA in 1986. The result was a canister that could hold 3 intact PWR assemblies, or 8 consolidated PWR assemblies. The goal was to create a standard system that could meet the NWPA requirements while maintaining flexibility and reducing costs. No canister procurements ever resulted from this program.
- By the late 1980s, larger dual purpose canisters were being purchased by utilities for dry storage in ventilated storage systems, and an updated Universal Container System (UCS) was pursued by DOE. In 1992, Secretary Watkins told Congress the UCS would be the standard for all shipments to Yucca Mountain. DOE ran a design competition for a

Multi-Purpose Canister System in 1994, and awarded the MPC contract to Westinghouse. Other vendors continued work on competing designs and the Westinghouse solution never captured market share.

- Specifications for a TAD (for transportation, aging and disposal) version of the MPC were conceived based on the specific disposal requirements for Yucca Mountain. The 2006 TAD contracting opportunity was another open competition, and two companies were awarded contracts – NAC and AREVA. Both companies developed designs and safety analysis reports and submitted them to the NRC for review. When the Yucca Mountain program was dismantled, the NRC ceased its review.

Current Status & Path Forward:

- There is a large installed base of non-standard dry storage canister designs that don't meet any specific disposal criteria. This large installed base, and utility commitments for future canister procurements minimizes the potential for utilities to adopt and use any new STAD canister design.
- Implementing a canister repackaging program at each operating utility site would be extremely expensive, pose high operational risk and impossible at the shutdown sites.
- The logical solution is to develop a single packaging facility that can reload existing dual purpose canisters (if needed) and can package bare fuel shipped from utility pools into a new STAD canister design if one is selected.

3) Task 3: Analyze *Repository Reference Disposal Concepts and Thermal Load Management Analysis* report (FCRD-UFD-2012-000219) and discuss with authors, as necessary, in order to understand thermal constraints with regards to the three sizes of STAD canister concepts.

Repository Reference Disposal Concepts, Thermal Load Analysis (E Hardin)

- Summarized the work on thermal analysis
- Two major categories emplacement modes: "open" where extended ventilation can remove heat for many years; and "enclosed" modes for clay/shale and salt media

Repository Reference Disposal Concepts

- Enclosed modes, waste packages are emplaced in direct contact with natural materials which have temperature limits that constrain thermal loading
- In-drift emplacement can be open or enclosed
- Packages may be kept in open drifts during operations, and backfill installed at closure

Key Thermal Constraints

- Limit thermally induced stresses or displacements in rock
- Limit the migration of brine-filled fluid inclusions in salt
- Limit physical and/or chemical changes to clay buffers

- Limit cladding temperature to 350°C during disposal
- Select host rock with strong conductive heat dissipation properties
- Use smaller packages to improve heat transfer and limit peak temperature
- Results indicate enclosed-mode would use relatively small packages for SNF (4 PWR/9 BWR) to limit peak temperatures
- Packages are significantly smaller than storage containers currently being loaded by U.S. nuclear utilities
- The target value for the maximum temperature of the clay buffer is assumed to be 100°C.
- High-burnup SNF could be emplaced in smaller 4 PWR waste packages, after approximately 100 yr of surface decay storage
- Salt has advantageous thermal characteristics to accommodate larger, hotter packages
- Regulatory retrieval requirements may be a problem for salt
- Emplacement of large packages may exceed weight limits on mechanical equipment
- Open modes evaluation concluded smaller waste packages (e.g., 4-PWR size) are needed to meet temperature limits in the Crystalline and Clay/Shale enclosed modes
- For salt, the superior thermal conductivity and greater tolerance to elevated temperature up to 200C or possibly higher allows use of larger waste packages
- Report identified ventilation requirements ranging from 50 yr to 250 yr for the open mode
- Enclosed concept requires roughly twice the footprint of an equivalent open mode
- Thermal conductivity of at least 3 to 4 W/m-K is needed to limit temperatures to 100C
- Thermal constraints are based international precedent, not fixed limits
- Complex coupled-process models are needed for explicit simulations of large waste packages
- Further investment in R&D on thermal limits benefits is needed

Report Recommendations

- R&D to Revise Thermal Constraints to Allow Higher Temperatures
    - Investigations needed to evaluate direct disposal of DPCs, waste package handling, transport, and emplacement
- Engineering Development of Disposal Concepts

    - Additional engineering studies needed to ensure the dimensions and other attributes of the proposed waste packages are adequate
- Reference Concepts Should Be Evaluated in Iterative Performance Assessments
- High-Fidelity Thermal Analysis
    - Additional coupled numerical simulations for Salt and open emplacement mode are needed
- Variability in Thermal Properties for Potential Host Media
    - Screening activities should emphasize thermal conductivity

Based on summary

- Salt repositories and open repositories in other media provide the best alternatives for accommodating larger waste packages
- Investigating and pushing assumed thermal limits is needed optimize support for the use of larger waste packages
- Seeking disposal flexibility drives system to smaller packages and dives costs up

Discussion and follow up with Labs

1. Why was report focused exclusively on repositories in the saturated zone, would repositories in the unsaturated zone in other formations still be viable?
2. What was the thinking behind the drift spacing in these reports? The analysis looked at drifts with 30 and 50 meter spacing, but YM used 81 meters
3. What is the relative impact of heat limits as opposed to environmental chemistry in viability of a repository
4. Since significant repackaging may be performed at the repository, were the accident probabilities considered as a constraint?
5. Was any consideration of a composite oxidizing/reducing repository environment considered?
6. What can be done to push limits that are driving the system to small packages?
7. The target value for clay buffer is 100°C. What are the options to push limit higher?
8. What is the likelihood of pushing thermal constraints to allow larger packages? What research would be needed?
9. Thermal constraints are used to limit the R&D needed and in response to regulatory input. What are the specific constraints and how can they be mitigated?
10. How far along are post closure performance assessment activities?

4) Task 4: Evaluate long term material compatibility with different types of repository media.

Repository Options	Locations	Environment	Depth (meters)	Waste Package Configuration	Waste Package Size BWR/PWR	Comment
Granite w/Clay buffer	Sweden	Reducing	450	Copper over iron	4/12	
	Finland	Reducing		Copper over iron	4/12	
	Canada	Reducing		TBD	TB D	
	Japan	Reducing	1000	Stainless Steel WP over SS can	HLW only	The Mizunami In Situ R&D Lab is still being mined - 500 meters out of 1000 cut so far
	Switzerland	Reducing	450	Copper over iron		NAGRA's Grimsel Test Site is still conducting tests. No final repository selection has been made.
Salt	Germany	Reducing		Stainless Steel WP over SS can	Originally HLW only, now UNF may be included.	The Gorleben salt dome is controversial, and resulted in a 10 year moratorium on disposal studies. That moratorium was lifted in 2010.
	USA	Reducing	760	Carbon Steel WP over CS can	4/9	From 1986 Salt Repository Concept
Sedimentary Formations						
Diatomaceous Argillaceous	Japan	Reducing	500	TBD	HLW only	The Honrobe R&D site is in sedimentary rock and is still in the lab excavation stage.
Claystone	Switzerland	Reducing	350	TBD	Could be a mix of UNF & HLW	Mont Terri Rock Laboratory
Mudstone	France (Bure) Meuse/Haute Marne	Reducing	500	Carbon Steel WP over SS can	HLW only	Current French R&D Program includes options with, and without a clay buffer
Clay	Belgium	Reducing	500	Stainless Steel, Titanium, or Nickle		The plastic, Boom Clay in Belgium readily deforms and entombs the waste, but has very low thermal conductivity. This limits the Belgium system to 188 W/package, compared to 1600 W/pkg for shale and other clay formations.
Volcanic Tuft	USA	Oxidizing	300	Alloy 22 (high nickle content SS)	21/44	

Take Away Lessons on Waste Package Design

- The most important material consideration is whether the repository environment will be oxidizing, or reducing. The geochemistry of the media and its interactions with the package contents is also important.
    - Salt does not tend to bind to radionuclides to limit migration after package failure. Including iron in those waste packages may help.
- All oxidizing environments require highly corrosion resistant waste packages. The exact design depends heavily on the specific chemistry of the formation.
    - The only oxidizing repository design to date is Yucca Mountain, where high nickel content Alloy 22 was selected.
    - Additional R&D on lower cost, and potentially more corrosion resistant amorphous metals should be encouraged.
- In reducing environments, the selection of waste package material is not as critical.
    - Salt repository designs include both carbon steel and stainless steel waste package designs. If brine migration can be minimized, corrosion is less of a concern than radionuclide migration after package failure.
    - Clay-like formations have both carbon steel and stainless steel waste packages. Clay binds to radionuclides and is much better at limiting migration after package

failure. The choice of package materials for clay formations is less influenced by the need to mitigate radionuclide migration.

- The granitic formations with clay buffer layers have selected copper as the waste package material over an iron basket. There is no internal canister per se. Granite is less effective for fixing radionuclide transport than clay.

5) Task 5: Produce designs for the STAD canister concepts.

Overview

- Cartoon (Conceptual Design) of Small, Medium & Large STAD canisters
  - Conceptual Design Approach
  - Overview of STAD Canister Designs
  - Criticality Scoping Analysis Results
  - Conclusions

Conceptual Design Approach

- Starting points:
  - Small STAD: 4 PWR/9 BWR
  - Medium STAD: 12 PWR/24 BWR
  - Large STAD: 21PWR/44 BWR (Use TAD concepts)
  - DPC-Sized STAD: 32 PWR/68 BWR

    NOTE. Subsequently decided that design concepts for a small (4 PWR/9 BWR), Medium (12 PWR/24 BWR) and Large (24 PWR/68 BWR) STAD canister would be developed.
- Layout STAD canister designs based on geometric constraints and engineering judgment
- Perform criticality and structural scoping analyses to determine viability of designs
  - Thermal analyses not performed
- Criticality: TAD Canister System Performance Spec (WMO-TADCS-000001, Rev. 1)
  - Material requirements
    - Borated SS (A887-89)
    - 1.1 wt % to 1.2 wt % Boron (only 1 wt % credited)
  - Configuration requirements
    - 0.4375” minimum plate thickness

        - ➢ Multiple plates may be thinner such that 6 mm remains after 10,000 years of corrosion at 250 nm/year (i.e., 0.315" thick plates acceptable for flux trap designs)
    - Cover all 4 sides of every assembly
    - Cover full length of active fuel region

Criticality Evaluation

- Criticality evaluations of PWR STAD canisters for transportation are expected to be based on burnup-credit (BUC) analyses
- Due to time constraints, scoping analyses used to develop conceptual designs model unburned (fresh), low-enriched fuel
    - Results of fresh fuel criticality analyses used to judge extent of BUC that may be required
    - If STAD canister meets 10 CFR 71 criticality requirements with 2% enriched fuel, then actinide-only BUC analysis should suffice
        - Actinide-only BUC = lower licensing risk (preferred approach for conservative STAD canister concepts)
        - Fission product BUC = higher licensing risk

Structural Evaluation

- Spacer plate HAC side drop stress analysis performed
    - 75g equivalent static load
    - Range of spacer plate impact orientations included (0° to 45°)
    - Radial gaps between spacer plates and canister shell modeled
    - Plastic-system stress analysis
- Stability analysis not performed
- Combined effects of drop and thermal not considered
- Sizing of all other STAD canister components based on engineering judgment and similarity to DPC designs

Overview of STAD Canister Designs

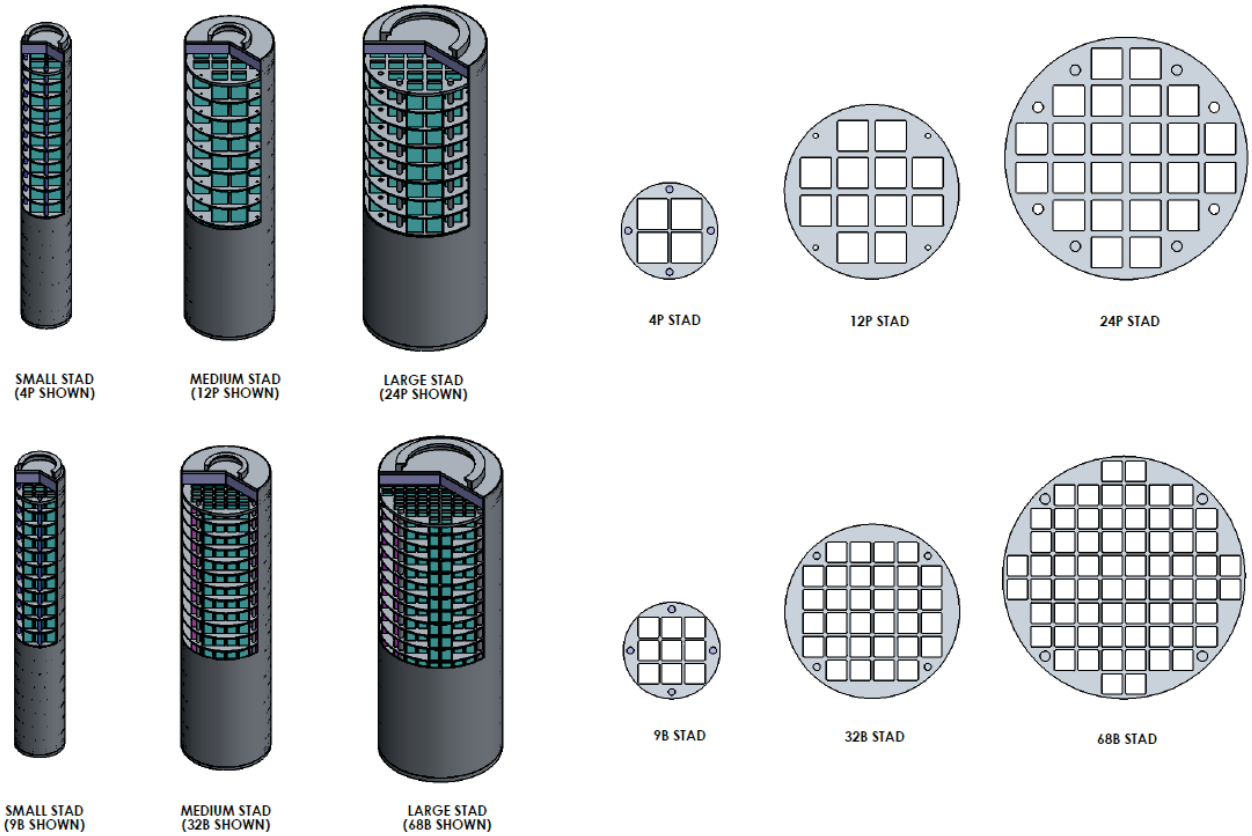

FLUX TRAP NOT REQUIRED FOR 4P

STAD Feature	Small STADs		Medium STADs		DPC-Sized STADs	
	4P	9B	12P	32P	24P	68B
Canister O.D. (in.)	29.00	29.00	52.00	52.00	72.00	72.00
Canister Length (w/o lift ring) (in.)	194.00	194.00	194.00	194.00	195.00	195.00
Canister Shell Thickness (in.)	0.38	0.38	0.50	0.50	0.63	0.63
Canister Bottom Plate Thickness (in.)	2.00	2.00	2.00	2.00	3.00	3.00
Canister Lid/Shield Plug Thickness (in.)	9.00	9.00	9.00	9.00	9.00	9.00
Canister Cavity Length (in.)	183.00	183.00	183.00	183.00	183.00	183.00
Fuel Tube Opening (in.)	9.00	6.00	9.00	6.00	9.00	6.00
Criticality Design	Egg-Crate	Egg-Crate	Flux Trap	Egg-Crate	Flux Trap	Egg-Crate
Canister Assembly Weight, Empty (lb.)	9,400	10,300	26,100	27,500	53,000	53,400
Fuel Payload Weight (lb.)	6,800	6,300	20,400	22,400	40,800	47,600
Canister Assy. Weight, Loaded (lb.)	16,200	16,600	46,500	50,000	94,000	101,000

THICKER BOTTOM PLATE REQUIRED FOR DPC-SIZED STADS

WEIGHT COMPARABLE TO NAC MAGNATRAN DESIGN

STAD Canister Designs

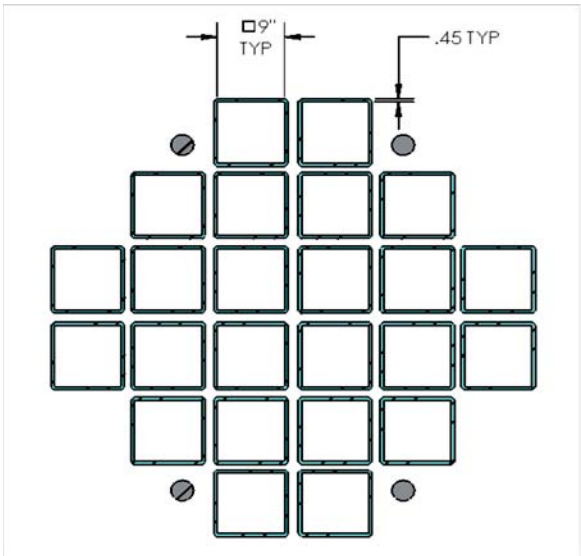

FLUX TRAP DESIGN
(24P STAD)

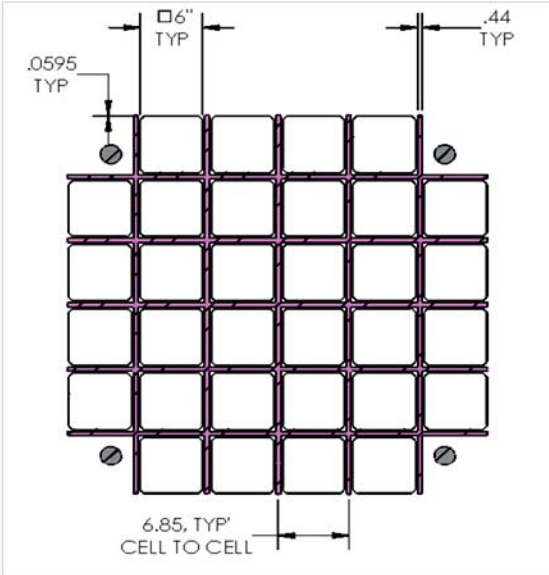

EGG-CRATE DESIGN
(32B STAD)

Multiple small STAD canisters can be stored and shipped together

- ALARA (fewer shipments = lower occupational exposure)
- Lower costs (vs. 12 PWR/32 BWR)
- Greater flexibility for permanent disposal(lower heat load)

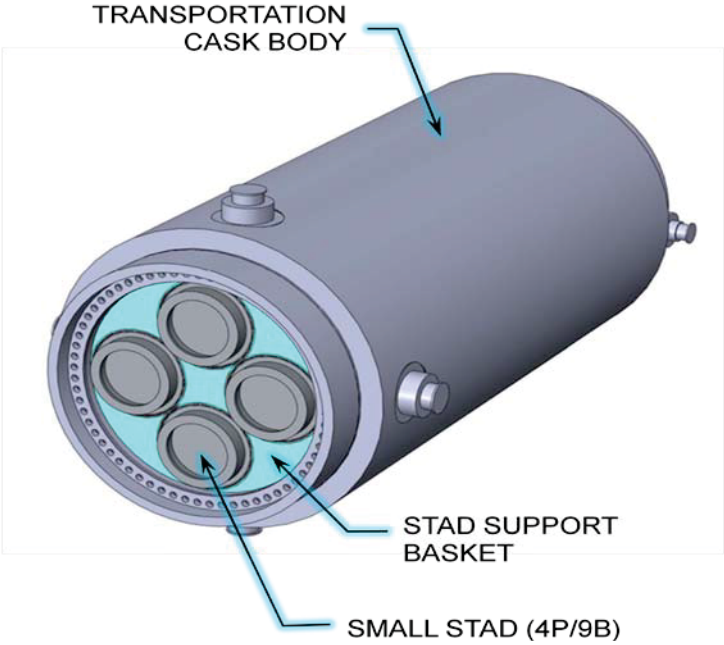

STAD 4P/9B Criticality Models

- 3D ¼-symmetry model in steel-lead-steel cask
  - Reflective symmetry boundaries
  - Full-length model with spacer plates
- Borated SS egg-crate (0.45” thick)
- W15x15 fuel modeled

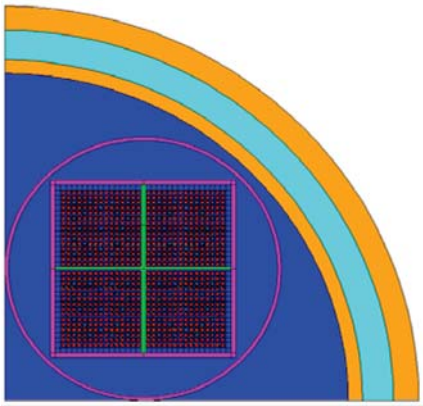

11

STAD 12P & 24P Criticality Models

- Infinite array flux-trap model
  - Single cell with reflective boundaries
    - W15x15 fuel modeled
    - 0.315” borated SS plates (green)
    - 1/2-thickness water gap (blue)
  - Full-length model with spacer plates

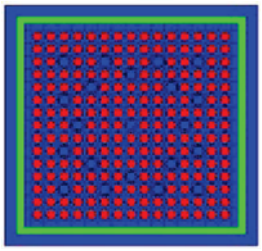

12

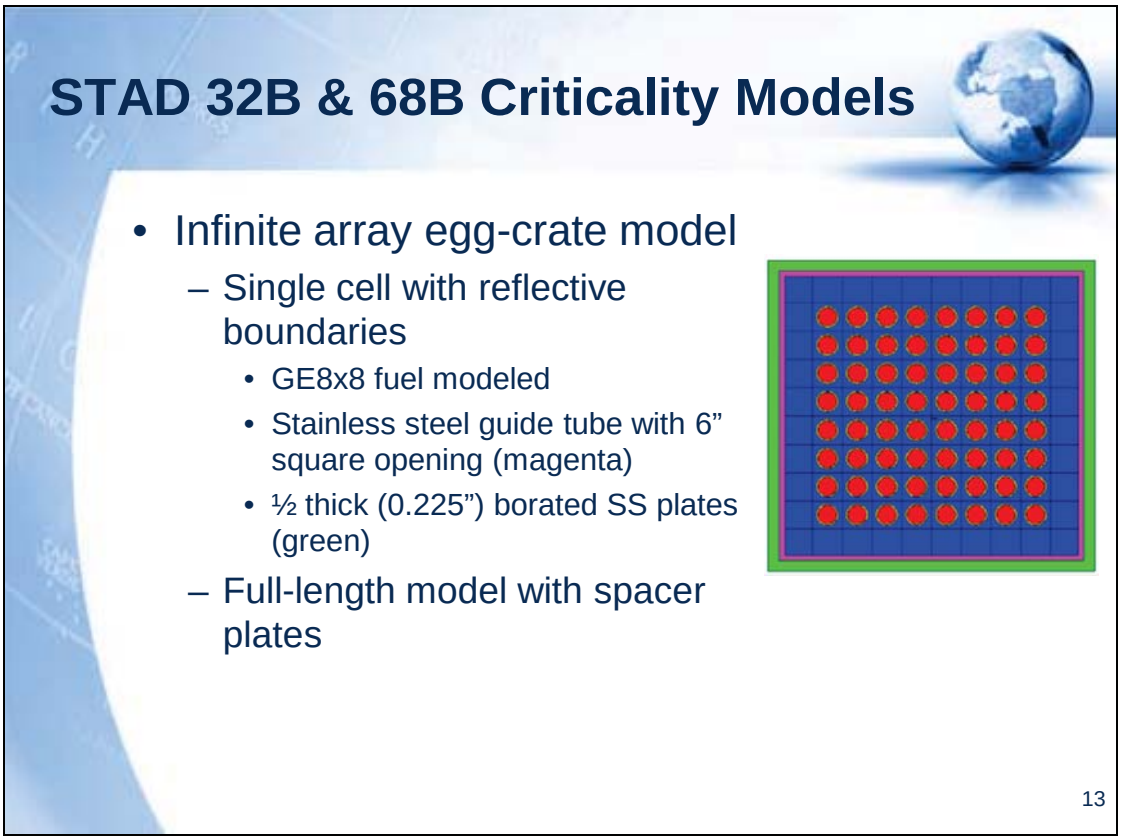

Criticality Scoping Analysis Conclusions

- Neutron absorber plates
  - Not needed on periphery of basket
    - No significant impact on reactivity
    - Reduces canister diameter
      - Smaller size allows more 4 PWR/9 BWR STAD canisters inside transportation cask cavity (4 vs. 3) → 25% fewer shipments
  - Egg-crate designs acceptable for less reactive payload configurations (i.e., 4 PWR, 9 BWR, 32 BWR, 68 BWR)
    - Neutron absorber plates do not cover full length of active fuel region (exception to TAD specification)
    - BWR designs can accommodate unburned fuel with initial enrichment up to 4.5 wt % ^{235}U

Overall Conclusions

- STAD Canister Capacities
  - Small: 4 PWR/9 BWR

  - Medium: 12 PWR/32 BWR
  - TAD size: 21 PWR/44 BWR
  - Large STAD: 24 PWR/68 BWR
- Actinide-only BUC analysis will be sufficient to qualify PWR fuel for transportation in the 4 PWR, 12 PWR and 24 PWR STAD canisters
- 9 BWR design can accommodate fresh fuel with initial enrichment up to 5.0 wt % ^{235}U
- 32 BWR & 68 BWR designs can accommodate fresh fuel with initial enrichment up to 4.5 wt % ^{235}U
  - Short loading may be required for initial enrichment > 4.5 wt % ^{235}U

6) Task 6: Evaluate the feasibility for a universal transportation cask.

Standardization Considerations

- Physical envelope of existing Canisters
- Thermal limits for transport
- Impact load limits for licensed transport, Normal and Hypothetical Accident
- Current system hardware and future system hardware
- NRC 10 CFR 71 Licensing

How Broad is Universal / Standardization for Transportation System?

- Existing Dual Purpose Canisters
- Near Term Systems to be put into service
- Vendor Specific Systems
- Scope for Existing Storage Only Systems

Table 1 - Summary of Dual Purpose Dry Storage Canister Transport Configurations

Transport Cask	10CFR71CoC		Fuel type	Capacity	Number of System	Cask Heat Limit	G Load		Canister Length	Canister OD	Cavity Length	Cavity ID	Loaded Weight (tons)
	Docket No	Rev Date					30 ft End	30 Ft Side					
NAC-STC	71-9235	Rev	P	26	64	22.1	56.1				165	71	121.6
			P	36 YR		12.5			122.5	70.6			
			P	28 CY		17.5			151.8	70.6			
			B	68 LC		4.5			116.3	70.6			
NAC-UMS	71-9270	Rev	P	24	214	20	57.8		175.1 – 191.8	67	192.5	67.6	118.6
			B	56		16							
NAC MAGNATRAN	71-9356	Pending	P	37	105	23	31.6	46.3	184.8 – 191.8	72	192.5	72.25	148.2
			B	87		22							
NUHOMS MP-187	71-9255		P	24	40	13.5	41.2	89.8			187	68	125.2
NUHOMS MP-197	71-9302		P	24 - 32	334	24	55	55			197	68	118.6
NUHOMS MP-197			B	61		18.3							
Std NUHOMS 24P/PHB			P						186.2	67.2			
Std NUHOMS 24PT2			P						186.5 / 192.5	67.2			
Std NUHOMS 52B			B						195.9	67.2			
Std NUHOMS 61BT			B						196	67.3			
TN-32			P	32		19							120.3
TN-40	71-9313		P	40		19							122
TN-68	71-9293		B	68		21.2	66						113.7
HI-STAR 100	71-9261		P	24	528	16.9	52.85	42.5 Slap Down 58.5	190.5	68.4	191.1	68.8	121.5
			P	32		16.9							
			B	68		16.2							
Humbodt Bay			HB										
HI-STAR 68				68		32 ?							
HI-STAR 180				32 / 37									
HI-STAR 190 (FW)				37 / 89									
FuelSolutions TS125	71-9276	Amend. 4	B	64	7	22	60	60	192.25	66.0	193.0	67.0	139.1

4

Dry Storage Only Systems

Transport Cask	10CFR71CoC		Fuel type	Capacity	Number of System	Cask Heat Limit	G Load		Canister Length	Canister OD	Cavity Length	Cavity ID	Loaded Weight (tons)
	Docket No	Rev Date					30 ft End	30 Ft Side					
VSC-24	72-1007	Amend. 6	P	24	18	24.0	120g*	44g*	164.2	62.5			28.4 (canister only)
		Amend. 6	P	24	16	24.0	120g*	44g*	180.3				
		Amend. 6	P	24	24	24.0	120g*	44g*	192.25				34.3 (canister only)

* Storage drop conditions.

U.S. Dry Storage Only Details

Utility	Reactor	Type	License Type	Year of First Load [14]	Vendor	Cask System	Canister or Cask Type	Total Canisters or Casks Loaded	Storage Only Designator	Assemblies in Storage Only Canisters	Assemblies in Storage only Casks
Constellation	Calvert Cliffs	PWR	SS	1992	TN	NUHOMS	24P	48	STORAGE ONLY CANISTER	1152	0
Constellation	Calvert Cliffs	PWR	SS	1992	TN	NUHOMS	32P	24	STORAGE ONLY CANISTER	768	0
Consumers	Big Rock Point[12]	BWR	GL	2002	BFS/ES	FuelSolutions	W150	8		0	0
DOE	INEEL	PWR	SS		TN	NUHOMS	12T	29	STORAGE ONLY CANISTER	177	0
Dominion	Surry	PWR	SS	1986	GNB	Castor	V/21 and X33	26	STORAGE ONLY CASK	0	558
Dominion	Surry	PWR	SS	1986	NAC	NAC-I28	NAC-I28	2	STORAGE ONLY CASK	0	56
Dominion	Surry	PWR	SS	1986	W	MC-10	MC-10	1	STORAGE ONLY CASK	0	24
Duke	Oconee	PWR	GL/SS	1990	TN	NUHOMS	24P	84	STORAGE ONLY CANISTER	2016	0
Duke	Oconee	PWR	GL	2000	TN	NUHOMS	24PHB	40	STORAGE ONLY CANISTER	960	0
Entergy	ANO	PWR	GL	1996	BFS/ES	FuelSolutions	VSC-24	24	STORAGE ONLY CANISTER	576	0
Entergy	Palisades	PWR	GL	1993	BFS/ES	FuelSolutions	VSC-24	18	STORAGE ONLY CANISTER	432	0
FirstEnergy	Davis-Besse	PWR	GL	1995	TN	NUHOMS	24P	3	STORAGE ONLY CANISTER	72	0
FPL	Point Beach	PWR	GL	1995	BFS/ES	FuelSolutions	VSC-24	16	STORAGE ONLY CANISTER	384	0
PPL	Susquehanna	BWR	GL	1999	TN	NUHOMS	52B	27	STORAGE ONLY CANISTER	1404	0
Progress	Robinson	PWR	SS	1989	TN	NUHOMS	7P	8	STORAGE ONLY CANISTER	56	0
							Totals:	358		8733	638

1. NUHOMS storage only canister limited by disk spacing –impact limiter
2. VSC-24 carbon steel canister shell – burnup credit licensing history

5

Dual Purpose Canister Review

- Physical Size
  - HI STAR 190 (FW) is stated as having a cavity capable of handling transport of all industry licensed canisters
  - MAGNATRAN has maximum known diameter of 72.25 inches
  - TN MP-197 has greatest cavity length at 197 inches
  - HI-STAR 100 is bounded by MAGNATRAN

Performance Limiting Variables

- Impact Limiter Performance
  - MANATRAN: 31.6 g end / 46.3 g side
  - TN- MP-197: 55 g for both end and side
  - HI STAR 100: 52.85 g end 58.5 g slap down / side
- Thermal Performance
  - MAGNATRAN: 23kW PWR / 22kW BWR
  - TN MP-197: 24 kW PWR / 18.3 kW BWR
  - HI-STAR 100: 16.9 kW PWR / 16.2 kW BWR

Path Forward Potential Vendor Specific Grouping

- NAC: MAGNATRAN should be capable of being licensed for MPC and UMS canisters
- TN: MP-197 may be capable of being licensed for MP-187 contents
- Holtec: HI-STAR 190 is reported to be able to transport smaller canisters, therefore it should be capable of being licensed for HI-STAR 100 contents

Storage Only Systems

- TN NUHOMS storage only canisters appear limited by disk spacing of basket
  - Enhanced Impact Limiter design reducing impact loads and
  - Performance of state of technology dynamics analysis
- NAC-S/T may be licensed for transport using licensed NAC-STC impact limiter, or unloaded in the Surry pool and loaded into a transportable system. Surry has the Castor and MC-10 storage only systems as well that require repackaging. This operation of repackaging may be performed at plant decommissioning prior to closing the pool operations.
- VSC-24 intended transport in the TS125

Ancillary Systems

- Lift Yokes
- Vacuum/Evacuation/Helium backfill systems
- Leak detection systems
- Lid bolt torque load and unload systems
- Impact limiter lift, alignment and attachment tooling

- Cask seal handling materials

7) Task 7: Identify advantages and disadvantages of STAD canister options for the utilities.

Utility Preference

- Plant Operations
- Plant Modifications
- Worker Safety

Impact on Plant Operations

- Most significant factor on plant operations
  - time required for STAD canister packaging activities
- Large STAD canister
  - time to complete these activities is approximately four days (utilizing all 24 hours in a day)
- Medium and small STAD canisters
  - these activities take approximately 10% and 20% less time, respective
  - for smaller STAD canisters, the minor time savings come primarily from shorter loading time (fewer assemblies to load) and canister lid welding time
  - all other STAD canister activities require time that is approximately independent of the STAD canister size
- To achieve the packaging capacity of a large STAD canister, the scenarios based on utilizing medium and small STAD canisters would increase the packaging time by approximately a factor of two and a factor of five (from medium, small size)
- Packaging process is most efficient using Large STAD canisters and achieves this objective most closely from a utility perspective
- Small STAD canister design is impractical and highly undesirable from a utility perspective (serial packaging, one canister)
- Small (parallel packaging, four canisters) and medium STAD canisters are less desirable than the large STAD canister but should not be ruled out (due to other factors)

Infrastructure

- STAD canister packaging activities inside the SNF loading structure will require building infrastructure and establishing the associated operating procedures

- Large STAD canister package weighs the most (requires highest-capacity crane); single-failure-proof crane
- Since the additional crane capacity is only a fraction of the cost compared to installation of a complete crane system, all STAD canisters and transfer casks are approximately equally desirable with respect to this criterion

STAD Canister Size: Impact on plant operations – Worker Dose

- Dose Impact from Packaging a STAD canister
  - Steps performed are almost identical for all canister sizes (small, medium, large)
  - Duration of these steps in packaging different canister sizes (and thus, the radiological impact on worker dose) is nearly the same
  - However, more iterations for packaging small/medium containers lead to more worker dose
  - Also, industry focus is on preventing unplanned events that increase radiological exposure to workers

Hydrogen Generation Issue: Impact on Worker Safety

- If the canister contains water
  - for the canister containing high heat-load SNF, higher potential for water expansion (increase in canister pressure) and hydrogen generation (increases ignition likelihood during welding)
- Issues are not directly related to the canister size
  - can be mitigated by careful monitoring

Other Considerations

- For smaller canister designs – can overpack with multiple canisters be considered?
- If parallel packaging is considered, could development of a 4 head welding machine be an R&D project?
- Cost
  - Who would pay for transferring small canisters or STAD canisters?
  - Who would pay for repackaging at the CSF?

8) Task 8: Identify impacts of the STAD canister concepts on the rest of the UFD system, e.g. transfer casks, transportation system (reactor to CSF and CSF to repository), CSF concept, storage casks, heavy haul, etc.

Purpose and Scope

- Action 11: Determine impacts of the large, medium and small STAD canisters on the rest of the UFD system, e.g. transfer casks, transportation system (reactor to CSF and CSF to repository), CSF concept, storage casks, heavy haul, etc.
- Preliminary analysis performed using TSM Preprocessor and Excel spreadsheet

Scenarios and Assumptions

- STADs Picked Up from Reactor Pools
  - DPCs: All UNF picked up in DPCs or TSCs (Task 11 Scenario 1)
  - 21 PWR/44 BWR STADs: UNF in pools loaded and picked up in 21 PWR/44 BWR STADs (YM TAD); one STAD per transportation cask (TC); UNF in dry storage picked up in DPCs/TSCs
  - 12 PWR/32 BWR STADs: UNF in pools loaded and picked up in 12 PWR/32 BWR STADs; one STAD per TC; UNF in dry storage picked up in DPCs/TSCs.
  - 4 PWR/9 BWR STADs: UNF in pools loaded into 4 PWR /9 BWR STADs; 4 STAD canisters per TC; UNF in dry storage picked up in DPCs/TSCs.
  - 3 TCs per shipment where possible, consistent with annual allocations

Summary Results – Shipment from Reactors

Cask Size	Total Casks	Total DPCs	Total STAD Casks	Total Shipments	Estimated Shipping Cost ($M)**
DPC	10,384	10,384	0	4,552	929.8
21 PWR/44 BWR	12,027	6,713	5,314	5,074	1,034.2
12 PWR/32 BWR	15,952	6,182	9,770	6,297	1,286.2
4 PWR/9 BWR (4x4, 4x9)	13,959	6,156	7,803*	5,624	1,148.8

* 4 STAD canisters per cask (31,212 STADs)

** Includes rail, barge, HH, security, and satellite communications costs

- Note that even if STAD canisters are loaded from reactor pools, the CSF will receive over 6,000 DPCs that will have to be repackaged.

Casks Shipped Per Year vs. STAD Canister Size

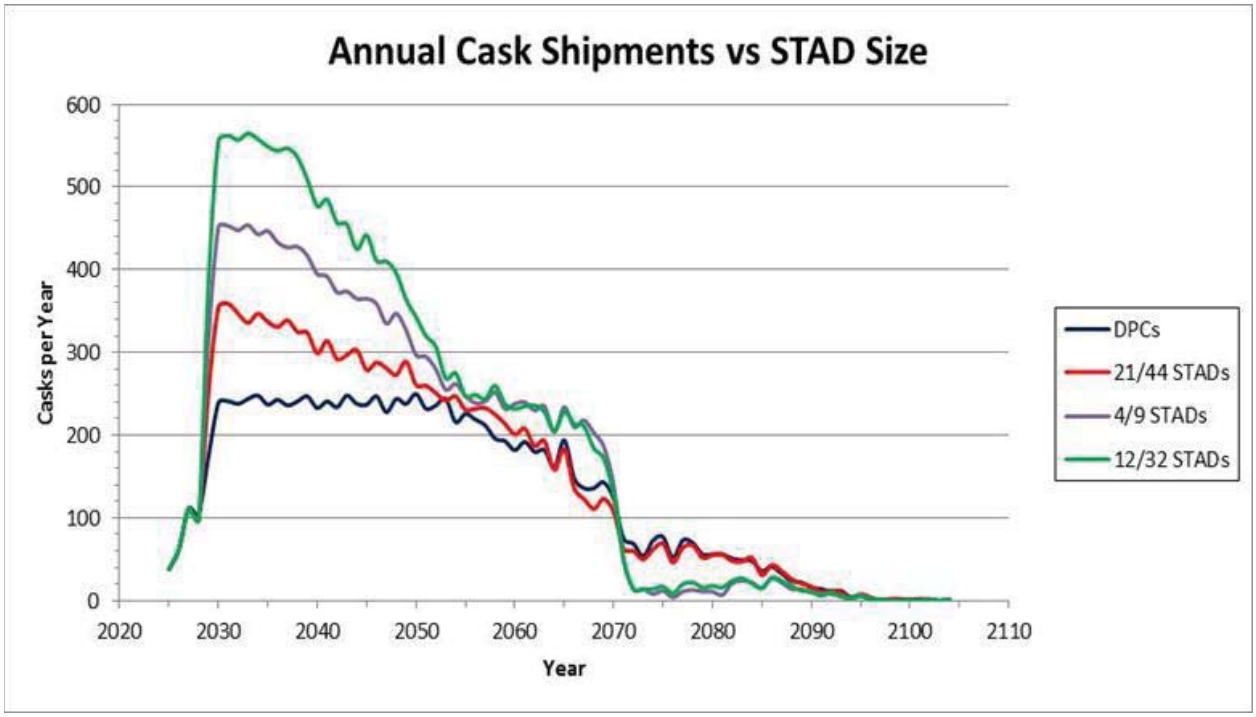

Shipments per Year vs. STAD Canister Size (3 Casks per Shipment)

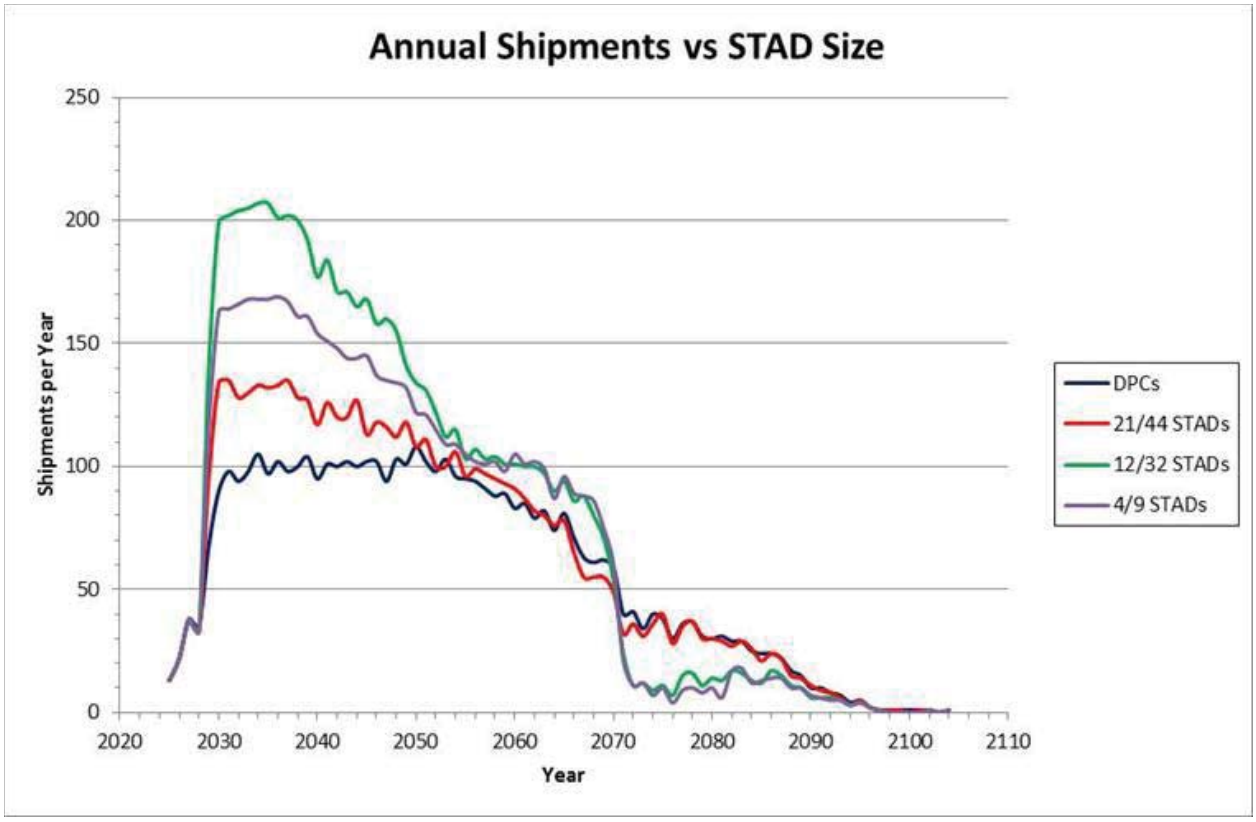

STAD Cask Shipment Rate to Repository

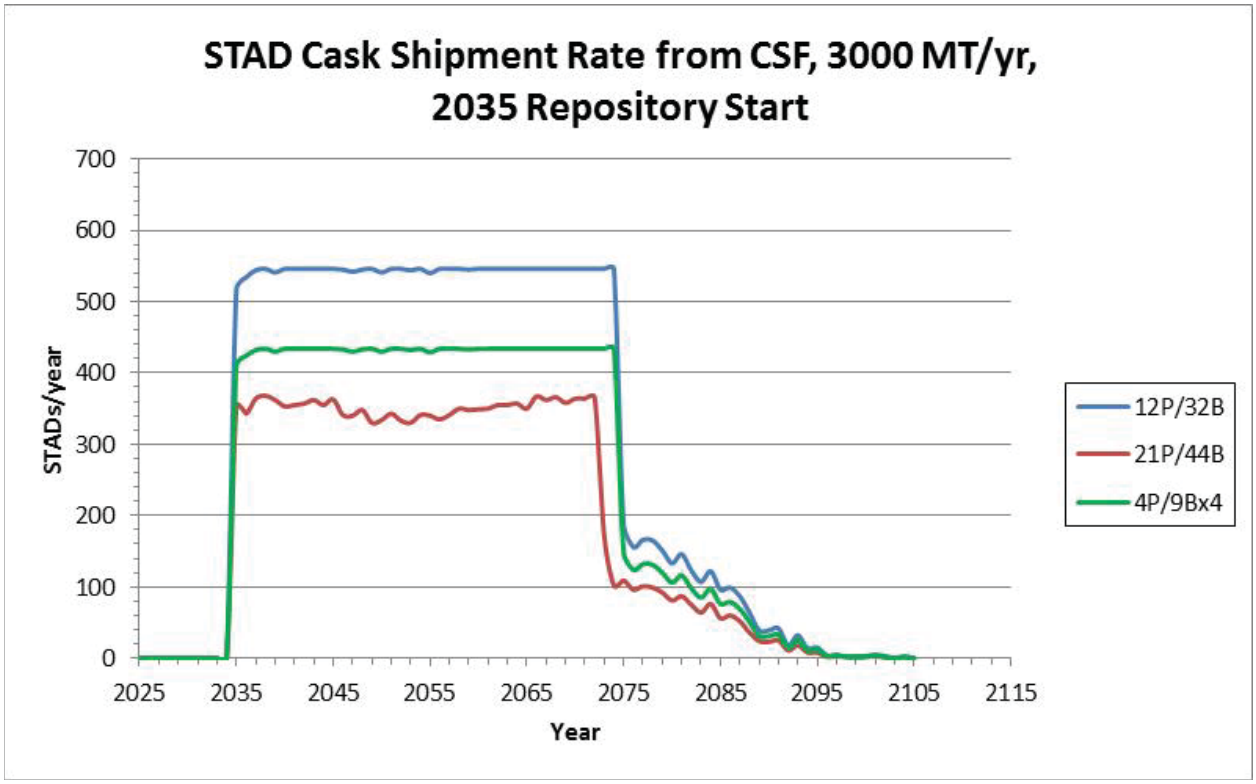

CSF Throughputs

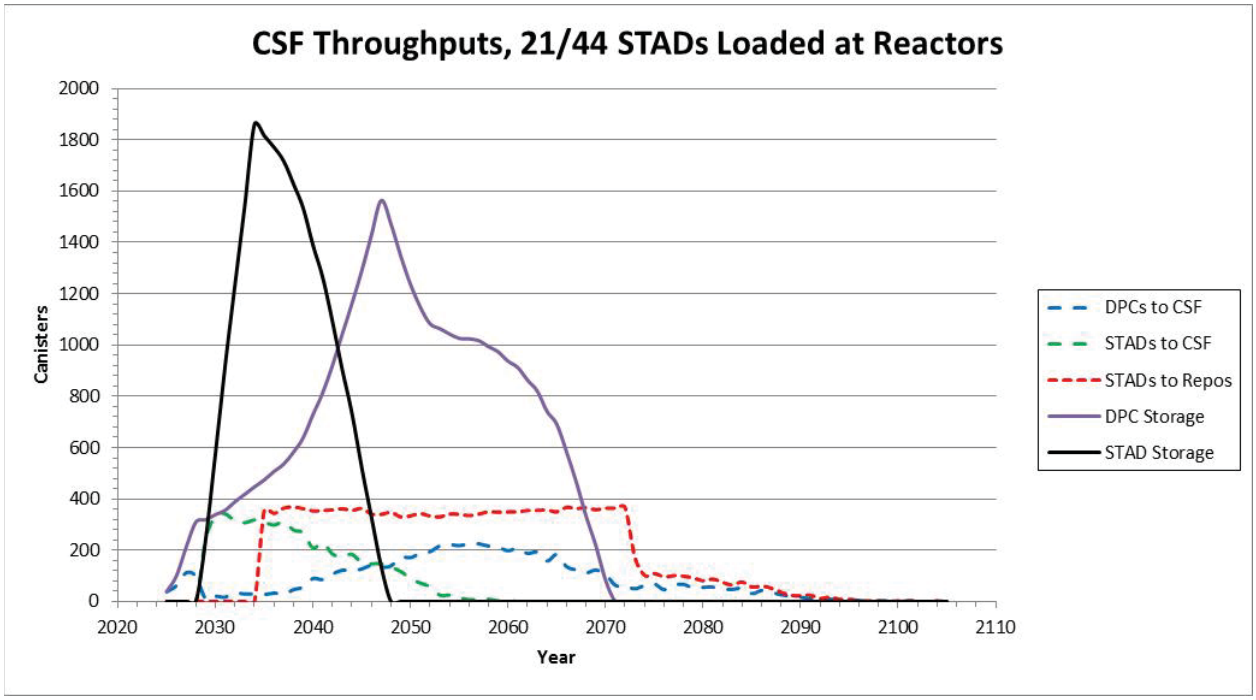

CSF Throughputs

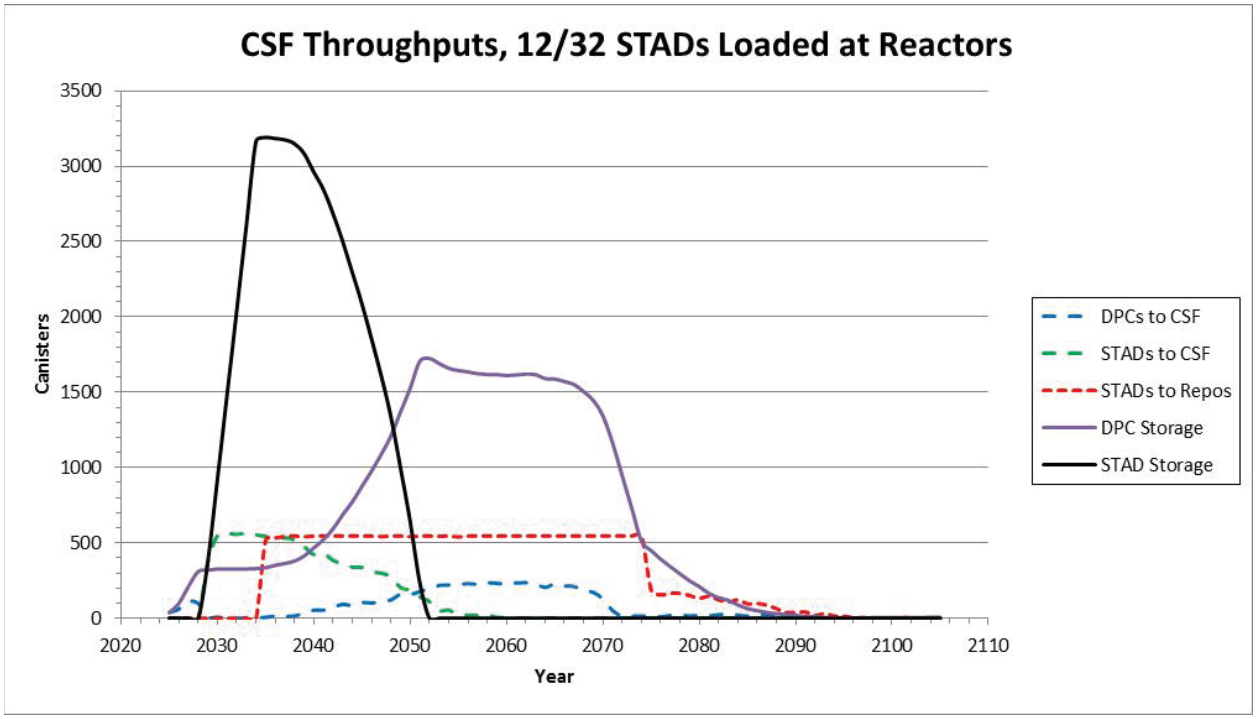

CSF Throughputs

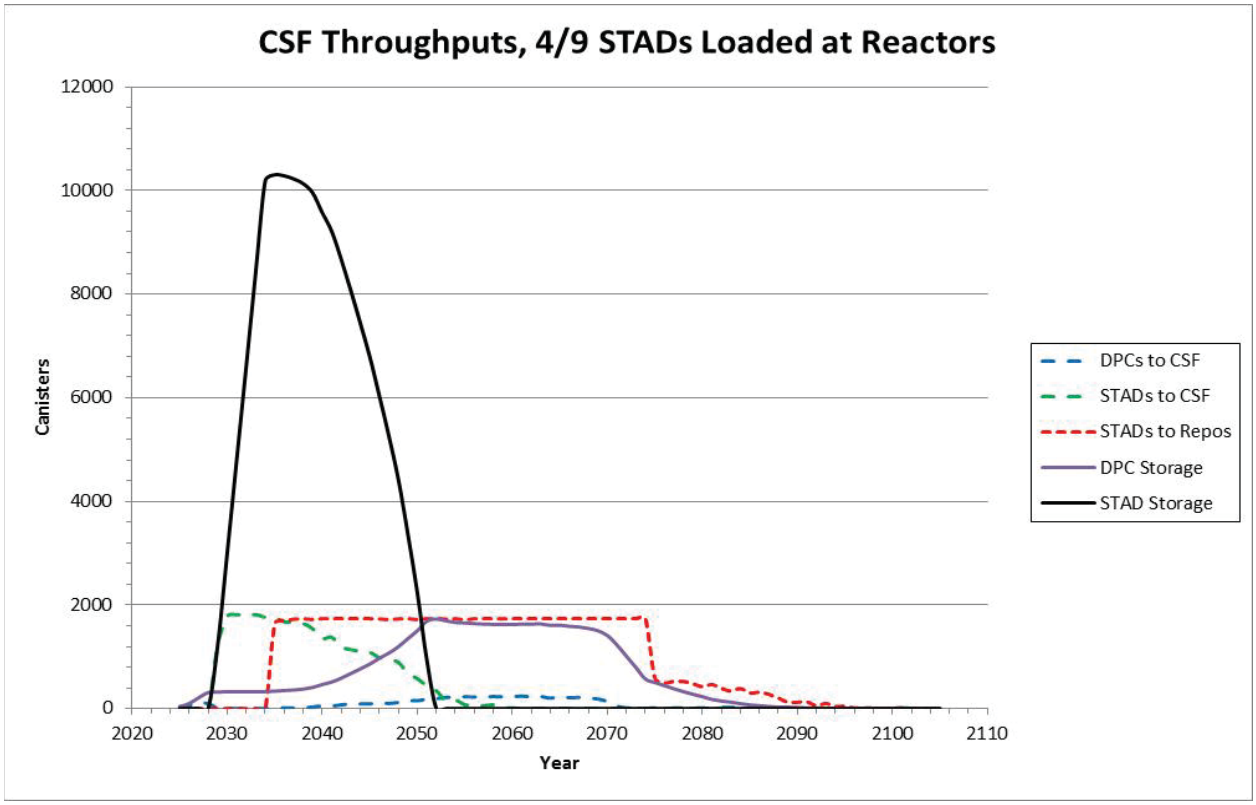

Conclusions

- Even if STAD canisters are loaded from reactor pools, there will still be over 6,000 DPCs shipped to the CSF that must eventually be repackaged
- The use of a smaller STAD canister (12 PWR/32 BWR or 4 PWR/9 BWR) will allow hotter UNF to be shipped, further reducing the number of DPCs shipped to the CSF
- Small (4 PWR/9 BWR) STAD canisters <u>must</u> be loaded, shipped, and stored in <u>at least</u> units of 4
  - A 4 PWR/9 BWR scenario will generate about 31,200 STAD canisters
  - 4 per cask may be the limit for shipping, more could possibly be stored per storage cask
- The different in shipping costs between all DPCs, 21 PWR/44 BWR STAD canisters, 12 PWR/32 BWR STAD canisters, and 4 PWR/9 BWR (x4) STAD canisters is $100M – $300M

9) Task 9: Develop a system auxiliary equipment tree for dealing with spent fuel and identify opportunities for standardization.

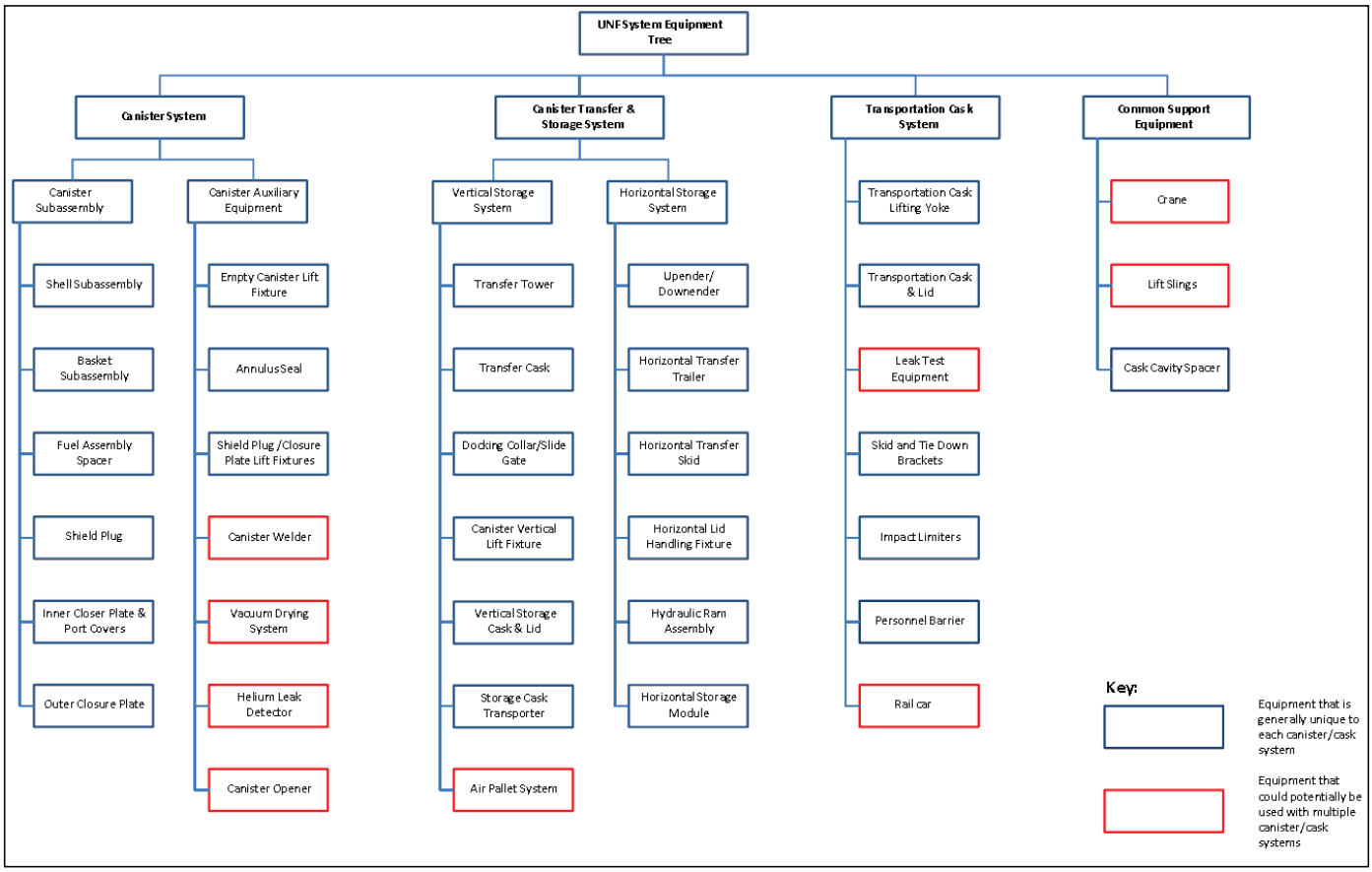

10) Task 10: Understand concerns over re-flooding of UNF canisters, such that any considerations regarding the design and concept of operation of the STAD canisters can be evaluated and incorporated as needed.

Purpose of Review

- Why is requenching/reflooding an issue
- NRC Regulations and Regulatory Guidance – NUREG-1536, ISGs
- Increased burn up and its impact on fuel storage/transportation and subsequent waste management operations.
- Reflooding consideration in licensed cask storage systems – how is it addressed – FSAR review
- Degradation mechanisms of Cladding in High-Burnup Fuel
- Projected data needs for Cladding in High-Burnup Fuel
- Considerations for Task Order 12 STAD Canister Study

Why is requenching/reflooding an issue

- Requenching as a regulatory term not used in cask storage or transportation applications
    - Used in reactor context of immersion of core after LOCA
    - Analyzed as accident condition in safety analysis
- Reflooding instead used as regulatory term in ISG-15, NUREG-1536, etc.
    - NUREG-1536 requires an evaluation of cask cool down and reflood procedures to support fuel unloading from a dry condition.
    - Extremely rapid cool down rates to which internals and fuel cladding are subjected during water injection may result in uncontrolled thermal stresses on cladding and failure in the structural members.

NRC Regulations and Regulatory Guidance

- 10 CFR 72, requires that the storage system be designed to allow ready retrieval of the spent fuel for further waste handling or disposal.
- 10 CFR 72, requires safe fuel storage and handling, and to minimize post-operational safety problems with respect to the removal of the fuel from storage.
- 10 CFR 71, requires that the geometric form of the spent fuel should not be substantially altered under normal conditions of transport as analyzed and specified in the SAR.
- NUREG-1536 and ISG-11 recommend limiting temperature cycling during drying and loading operations to less than 10 cycles with cladding temperature variations that are less than 65°C each.

- ISG-11, Rev. 3, recommends that for all fuel burnups (low and high), the maximum calculated fuel cladding temperature should not exceed 400°C (752°F) for normal conditions of storage and short-term loading operations (e.g., drying, backfilling with inert gas, and transfer of the cask to the storage pad).
- ISG 11, Rev. 3, recommends that for short-term off-normal and accident conditions, the maximum cladding temperature should not exceed 570°C (1058°F).
- ISG-15 provides fuel integrity criteria, predicated on the extent of corrosion (oxidation) of the fuel cladding, to assess damaged SNF.

High-Burnup Fuel – impact on storage, transportation and subsequent waste handling

- **Low-Burnup Fuel**: Large database exists for fuel with burnup less than 45 GWd/MTU. Not likely to have a significant amount of hydride reorientation due to limited hydride content.
- **High-Burnup Fuel**: Growing database exists for spent fuel with burn up greater than 45 GWd/MTU.
- Data show that cladding oxidation levels, hydriding of the cladding, higher fuel rod internal pressures and hoop stress increases with high-burnup, especially for high-duty fuel cycles.
- Uncertainty exists on how much the burnup-dependent properties impact the cladding integrity of the fuel during dry storage.

Reflooding consideration in licensed cask storage systems of High-Burnup Fuel – FSAR review

- Fuel assemblies can be removed from canisters by reversing the sequence of initial fuel loading using the plant's spent fuel pool.
- Fuel unloading procedures are governed by the plant operating license under 10 CFR 50.
- Safety concerns related to rapid cask cool down by direct water quenching, is avoided by cooling in a gradual manner, eliminating thermal shock loads on the canister internals and fuel cladding.
- Prior to reflooding the canister cavity, forced flow helium recirculation system is operated to remove the decay heat and initiate a slow cask cool down.

Degradation mechanisms of Cladding in High-Burnup Fuel

- Most degradation mechanisms are temperature dependent; degradation rates generally increase with temperature.
- Recent data show that high-burnup fuel cladding can become brittle at lower temperatures due to phenomena such as radial hydride precipitation.
- Need to develop realistic temperature profiles for fuel cladding as a function of time over extended storage.

- Exposure to the high-temperature water causes waterside oxidation of the cladding thereby reducing the wall thickness of the cladding.
- Irradiation damage of the cladding is the primary contributor to the reduced ductility, with hydrides as a secondary contributor.
- External stressors that can impact a Dry Cask Storage System (DCSS) include:
- **Thermal Stressors**: degradation processes that have thresholds below 400°C may be influenced by higher burnup and longer storage times.
- **Radiation Stressors**: change of material properties and depletion of neutron poison materials.
- **Chemical Stressors**: water if it has not been fully removed from the canister during loading and drying process.
- **Mechanical Stressors**: include loads that could impact SSCs of dry storage systems either continually or for short durations.
- Short-term loads include impacts that are the result of off-normal or accident conditions.
- Effects of mechanical loads during reactor operations such as pressure and hydrodynamic loads must be taken into account in evaluating the performance of cladding and fuel assembly hardware.
- Mechanical stressors could change the structural properties of SSCs of DCSS.

Projected Data Needs for Cladding in High-Burnup Fuel

- Calculate more accurate temperature profiles and cladding temperatures under storage conditions.
- Determine impact of phase change that can affect the mechanical properties (strength) of cladding.
- Evaluate occurrence of cladding fatigue caused by temperature fluctuations (thermal recycling).
- Evaluate thermal annealing, which can reduce the cladding hardness caused by radiation damage.
- Better understanding of hydrogen effects on embrittlement
- Significant data are needed to determine the effects of high-burnup (>45 GWd/MTU) and different clad alloys on hydrogen embrittlement and reorientation on ability of cladding to remain in the same condition it was in when placed in dry storage.
- Determine mechanism of rapid oxidation and if it could ever occur in dry storage .

- Realistic calculations of how much water may be allowed to remain in the DCSS.
- Access to data on newer cladding alloys and on high-burnup cladding.

Considerations for Task 12 Study

- Significant data are needed to determine the effects of high-burnup (>45 GWd/MTU) and different clad alloys on hydrogen embrittlement and reorientation on ability of cladding to remain in the same condition it was in when placed in dry storage.
- Determine mechanism of rapid oxidation and if it could ever occur in dry storage .
- Realistic calculations of how much water may be allowed to remain in the DCSS.
- Access to data on newer cladding alloys and on high-burnup cladding.

11) Task 11: Determine cost and volume associated with waste from repackaging activities. The intent of this task being to develop ball-park disposal costs for emptied DPCs, such that the trade-offs of disposing of some or all of the emptied DPCS versus using STAD canisters and directly disposing of DPCs in the repository can be evaluated. Empty DPC disposal is potentially a major cost and ways to reduce cost should be identified.

Purpose and Scope

- Cost and volume associated with waste packaging from repackaging activities, e.g. empty DPCs.
- Key assumption: used DPCs can be decontaminated down to Class A levels

Unit Cost Data for DPC Disposal

- Yucca Mountain TSLCC (2008) used $100,000 per DPC
  - $106,672 in 2012 dollars
  - Approximately $9,357 per m^3 (2012 $) for a large DPC (11.4$m^3$)
  - No information available on the basis for this number
- ANL System Architecture Study (2012) used $1,650 per m^3
  - Trying to find out the basis
- 2005 Health Physics Society position paper:
  - "Waste-disposal costs for government contracts held by the Department of Energy (DOE) and the Army Corps of Engineers are approximately $5 per ft^3 for disposal of Class A LLRW at the Clive, Utah, disposal facility. For waste generators that do not have access to these government contracts, waste-disposal costs often exceed $200 per ft^3 for Class A LLRW."
  - $200 per ft^3 = $7,063 per m^3 ($8,276 per m^3 in 2012 $)
- Barnwell LLW disposal site (2013): $7.516 per pound for items > 120 lb/ft^3

- Clive LLW disposal site: $4,650 per m^3

Typical DPC Dimensions and Volumes

System Name	Canister	Canister OD (in)	Canister OL (in)	Canister Volume (cuft)	Canister Volume (cum)
HI-STAR 100	MPC-24	68.4	190.5	405.1	11.5
HI-STAR 100	MPC-32	68.4	190.5	405.1	11.5
HI-STAR 100	MPC-68	68.4	190.5	405.1	11.5
NUHOMS MP-187	24P	67.2	186.2	382.2	10.8
NUHOMS MP-197	24PT2	67.2	192.5	395.1	11.2
NUHOMS MP-197	32PT	69.8	199	440.7	12.5
NUHOMS MP-197	61BT	67.3	196	403.5	11.4
NAC UMS	MP-24	67	191.8	391.3	11.1
NAC UMS	MP-56	67	175	357.1	10.1
NAC STC	TSC-26	70.6	164	371.5	10.5
NAC STC	36 YR	70.6	122.5	277.5	7.9
NAC STC	28 CY	70.6	151.8	343.9	9.7
NAC STC	68 LC	70.6	116.3	263.5	7.5
TS-125	W74	66	192.25	380.6	10.8
NAC MAGNATRAN	PWR	72	192	452.4	12.8
NAC MAGNATRAN	BWR	72	184.8	435.4	12.3

- Average for large (>10 m^3) DPCs is 11.4 m^3
- Typical large DPC weighs ~ 75,000 lb empty

Disposal Cost for Average Large DPC (2012$)

Source	Unit Cost	Avg Cost per DPC	Task 11 Scn 1 ($M)
YM 2008 TSLCC	$9,357/$m^3$	$106,672	$1,075
ANL SA Study	$1,650/$m^3$	$18,779	$189
HPS (2005)	$8,276/$m^3$	$94,192	$950
Barnwell LLW Facility	$7.516/lb	$563,700	$5,683
Clive LLW Facility	$4,650/$m^3$	$52,906	$533

- Note: Task 11 Scenario 1 produced 10,082 DPCs (assumed all UNF picked up in DPCs)

Conclusions

- Cost data for DPC disposal varies widely – still trying to obtain the basis for ANL value (it seems low compared to others)
- It appears that unit disposal costs could range from $50,000 to $500,000 per DPC
- For an all-DPC scenario, this means that DPC disposal costs could be in the range of $500 Million – $5 Billion.
- There is also the possibility that the sheer number and volume of DPCs (~10,000; 4,000,000 ft^3) would exceed the capacity of some existing LLW sites
- Volume reduction would not reduce disposal costs for sites that charge by weight (e.g. Barnwell)
- Other options, such as decontamination to less than Class A levels and disposal as scrap could be considered (may be cheaper)
- At this point, $100,000 per DPC appears to be a reasonable estimate

12) Task 12: Research Yucca Mountain cost information and retrieve and condense Task 12 relevant cost information.

Research historical Yucca Mountain cost information and retrieve and condense Task 12 relevant cost information

Need to be able to quantify the cost deltas between:

a. Small, medium and large

b. Potential media

No Detailed Information Available

- Proprietary information from the cask manufacturers
  - TSLCC cost for TAD is all that is available publicly
- Size was never considered
  - TAD was designed to be the same size, weight, center-of-gravity as the Yucca Mountain Waste Package to eliminate the need to redo all of the analyses
- OCRWM concluded “Bigger is better”
  - Cost
  - Worker dose/exposure.
- Utilities won’t load the smaller TAD/STAD canisters.

13) Task 13: Research disposal package size versus SNF/UNF inventory on a per country basis, in order to determine if there are any lessons learned.

Package Size versus Total UNF Inventory by Country:

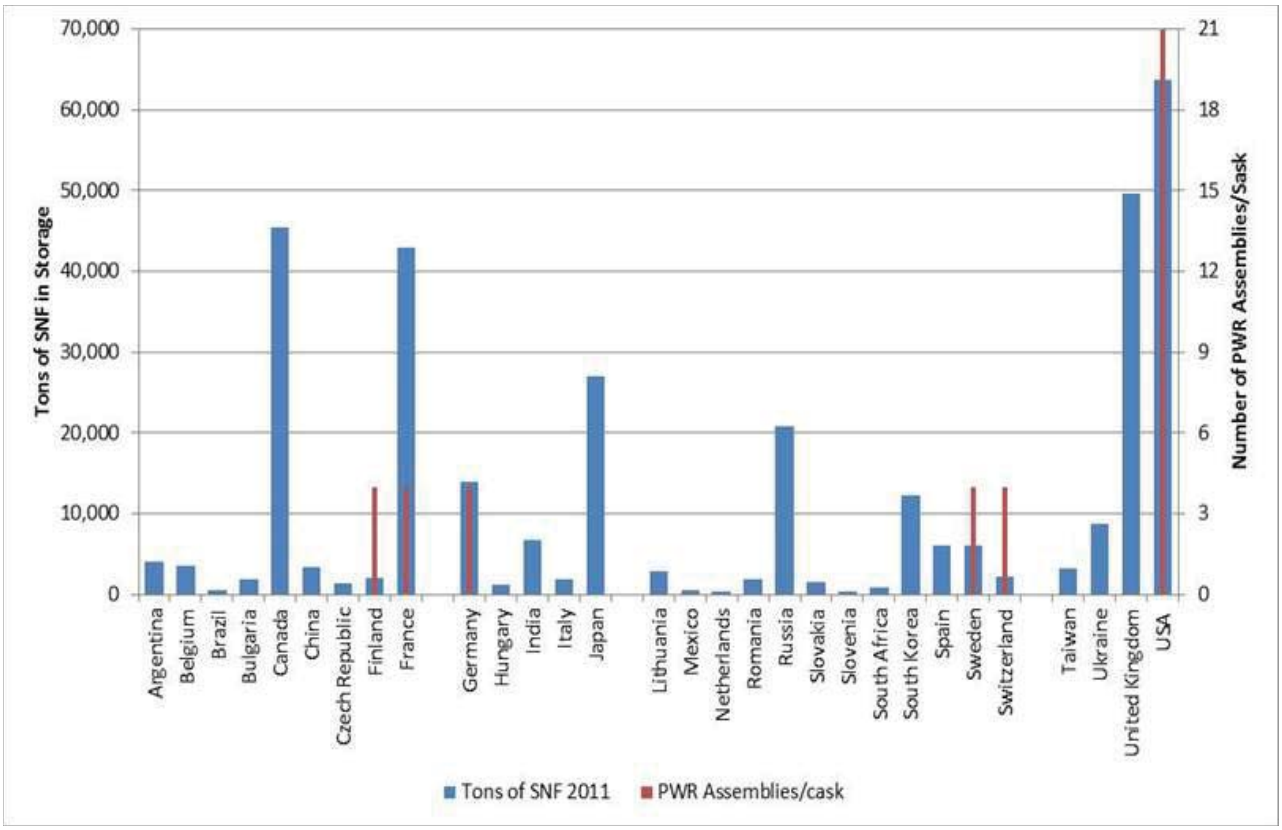

We have to be careful when summarizing this information.

- Most countries with small disposal packages also have small quantities of waste in storage. There is a tendency to assume the higher cost per package might be justified with a smaller inventory to address.
    - The cost of a repository for a small country is much higher per kilowatt of electricity produced. The significant scientific and infrastructure development effort is not amortized over a large amount of spent fuel.
    - If funds were raised the same way they are in the US (with a surcharge on electricity produced by nuclear power plants), the per kilowatt charge would be significantly higher than in the US, and that runs counter to the idea of using an inefficient disposal cask.
- There are far more countries with waste than ones with a specific disposal plan and configuration. The dominance of repositories in reducing environments may not continue as more countries select their repository concepts.

APPENDIX C – Cross-reference between Task Order 12 Statement of Work and the STAD Canister Feasibility Study Report

Statement of Work Section	Statement of Work Requirement	STAD Canister Feasibility Study Report, Section No.
Introduction		
1	This purpose of this solicitation is to assist the DOE Office of Used Nuclear Fuel Disposition (UFD) in implementing a study for the feasibility of development and licensing of standardized transportation, aging, and disposal canisters and casks. The UFD Campaign has previously initiated planning for standardized transportation, aging and disposal canister system (STAD) research and development.	**N/A**
1	The canister system is the fundamental link that integrates used fuel storage at the utilities to ultimate disposal; hence, the canister design will be dependent upon the collective functional needs and requirements of all anticipated operations within the waste management system.	**N/A**
1	The used fuel dry storage industry is mature. Since the mid 1980s, 8 cask vendors have provided about a dozen cask systems comprised of over 30 different cask types, none of which have been considered for disposal to date. A variety of dry fuel storage systems have been and continue to be developed and deployed. Of the more than 65,000 Metric Tons Uranium (MTU) of Used Nuclear Fuel (UNF) generated to-date, approximately 24% is stored in over 1,500 dry storage casks (DSCs). The amount of fuel that will be transferred from wet to dry storage is expected to increase at a rate of approximately 100 DSCs/year. The nuclear industry is currently using large dry storage systems with canister capacities up to 37 PWR or 89 BWR fuel assemblies. These systems are either single-purpose (storage only) or dual-purpose (storage and transportation); none of them are currently licensed for disposal. To further complicate matters, currently there is neither a repository identified for permanent disposal, nor generic repository regulations.	**N/A**

Task Order 12: Standardized Transportation, Aging and Disposal Canister Feasibility Study

Statement of Work Section	Statement of Work Requirement	STAD Canister Feasibility Study Report, Section No.
1	In contrast to used fuel storage and transportation regulations and performance expectations, regulatory and performance requirements for used fuel disposal are highly uncertain. Direct disposal of the large canisters currently used by the commercial nuclear power industry is beyond the current experience base domestically and internationally and represents significant engineering and scientific challenges. As a point of reference, it took over 20 years to develop the design and technical basis for the relatively high-temperature disposal concept pursued in the United States until 2010. That design uses large waste packages accommodating 21 PWR or 44 BWR assemblies. This can be compared to the smaller waste packages analyzed in *Generic Repository Design Concepts and Thermal Analysis (FY11)* that would be needed to implement the disposal concepts for clay/shale and crystalline media being developed in Europe (Table 1). Repackaging of fuel from these larger canisters into smaller ones for disposal, may be required to avoid extensive surface decay storage, or to meet physical constraints on disposal systems, or because additional criticality controls are determined to be necessary.	**N/A**
1	The DOE is seeking technical ideas and recommendations, supported by evaluations/analyses, on approaches to better integrate storage (standardized canister concepts) into the waste management system. For example, things we would like evaluated include, but are not limited to: how can we standardize given the current situation described above, especially with respect to disposal unknowns; should we carry different standardized canister sizes forward depending on disposal unknowns; are there only certain elements of the total waste management system where standardization is feasible; thermal limits have been set, but are they really an issue, etc.	**4.0, 5.0, 6.0 and 7.0**
1	This work will require coordination with and input from work that is being conducted by the UFD Campaign National Laboratories and Industry Support Contractors regarding the Systems Architecture work, ongoing generic geologic disposal evaluations, and Consolidated Storage Facility Design Concepts (Task Order 11). It will also require input from the nuclear utility industry and cask vendor community.	**8.0 (References identify National Laboratory work used in performing the study).** **Input from the nuclear utility industry was provided by Exelon Nuclear Partners and Sargent & Lundy (major provider of engineering services to the nuclear utilities).** **Input from the cask vendor community was provided by NAC International.**

Task Order 12: Standardized Transportation, Aging and Disposal Canister Feasibility Study

Statement of Work Section	Statement of Work Requirement	STAD Canister Feasibility Study Report, Section No.
1	It is important that any STAD canister be consistent with the nuclear industry's high level of plant operability. In addition to the physical constraints below, functional analyses should include evaluation of utility operational throughput needs associated with managing their spent fuel pools to maintain plant operations. The management, planning, loading, and transfer of UNF from pools to dry storage systems can be a complex process and involve the use of plant resources (both human and equipment) that have other competing demands on their time as well as dose considerations. These competing demands can impact the canister loading throughput. In order to facilitate utility acceptance of standardized transportation, aging, and disposal canisters, impacts on utility resources and ability to produce power must be minimized and eliminated where possible.	**Section 4.5**
	Applicable laws, rules, directives, and standards with which the project must comply will be identified. Specific items for consideration will include but are not limited to: • Licensing Requirements for the Independent Storage of Spent Fuel, High Level Radioactive Waste, and Reactor Related Greater than Class C - 10 CFR 72 • Storage Handling Requirements - At reactor - At Independent Spent Fuel Storage Installation (ISFSI) - At repository • Transportation Requirements - 10 CFR 71 • Transportation Handling Requirements • Repository Issues	**Section 4.2 and 4.3**
Scope of Work		
2	The contractor shall provide technical services to support the DOE Office of Nuclear Energy UFD Campaign. The technical services includes technical ideas and recommendations supported by analysis and evaluation that are provided in a report format necessary to support a future DOE decision regarding the development and licensing of a standardized canister system.	**Addressed by this report**

Task Order 12: Standardized Transportation, Aging and Disposal Canister Feasibility Study

Statement of Work Section	Statement of Work Requirement	STAD Canister Feasibility Study Report, Section No.
STAD Canister System Feasibility Draft Report		
2.4	**The Contractor will develop a STAD Canister System Feasibility Draft Report (see below). Things that should at a minimum be considered in development of this report include:**	
2.4	1) ongoing UFD Campaign work related to Systems Architecture (including draft Concept of Operations), Generic Geologic Disposal Evaluations, and Consolidated Storage Facility Design Concepts (points of contact for the National Labs and UFD Consolidated Storage Design Concepts A&AS Contractors will be identified);	**Section 3.0**
2.4	2) identification and consideration of site-specific limitations that may impact the various STAD related storage and transportation options at each nuclear utility;	**Section 4.5**
2.4	3) utility canister and loading campaign approaches and strategies;	**Section 4.5**
2.4	4) assessment of STAD canister impacts on the total waste management system for scenarios that include consolidated interim storage facilities;	**Section 4.5**
2.4	5) regulatory requirements (including assumed disposal requirements);	**Sections 3.0 and 4.2**
2.4	6) development of assumed goals, objectives, and functional requirements of a STAD system.	**Sections 3.2 and 3.4**
	STAD Feasibility Report identifying, as a minimum:	
2.4	1) identification of STAD system scenarios considered (including canister sizes);	**Section 4.1**
2.4	2) overall impacts (including advantages and disadvantages) of each scenario;	**Section 4.5**
2.4	3) specific advantages and disadvantages of switching to a potentially smaller standardized canister (e.g., cost, time, dose, transportation, etc.) including how these advantages and disadvantages change with time of implementation;	**Sections 4.4 and 4.5**

Statement of Work Section	Statement of Work Requirement	STAD Canister Feasibility Study Report, Section No.
2.4	4) proposed innovative solutions, if any, to addressing disadvantages and an assessment of canister size limitations versus level of difficulty to overcome disadvantages/challenges;	**Sections 4.4 and 4.5**
2.4	5) feasibility/trade studies to address the following: a) if and when to transition to using standardized canisters, b) where to deploy them within the spent fuel management system, c) what standardized canister concept, if any, is most feasible to be pursued, and d) what should be done with fuel already stored in non-standardized canisters.	**Sections 4.4 and 4.5**
2.4	Included in this deliverable will be a recommended path forward regarding standardization with supporting rationale as well as identification of areas for additional research.	**Sections 4.4, 4.6, 5.0, 7.0**
Final Report		
2.5	The Contractor will develop the STAD Canister Systems Final Report, using feedback from the UFD Campaign.	**UFD Campaign comments on the Draft Report will be addressed in the Final Report.**
Applicable Codes, Standards, and Standards		
4	The Contractor shall prepare the analyses under Quality Rigor Level 3 guidelines. (Reference : Fuel Cycle Technologies Quality Assurance Program Document, Revision 1, dated 08/19/2011)	**Technical Review performed and documented via FCT Document Cover Sheet.**

APPENDIX D – STAD Canister Concept Drawings

Figure	Sketch No.	Title
D-1a to D-1d	DWG-205577-ME-0001	Standardized Transport, Aging and Disposal Canister - 4 PWR Assemblies - Assembly & Details – Sheets 1 to 4
D-2a to D-2d	DWG-205577-ME-0005	Standardized Transport, Aging and Disposal Canister - 9 BWR Assemblies - Assembly & Details – Sheets 1 to 4
D-3a to D-3g	DWG-205577-ME-0010	Standardized Transport, Aging and Disposal Canister - 12 PWR Assemblies - Assembly & Details – Sheets 1 to 7
D-4a to D-4e	DWG-205577-ME-0015	Standardized Transport, Aging and Disposal Canister - 32 BWR Assemblies - Assembly & Details – Sheets 1 to 5
D-5a to D-5g	DWG-205577-ME-0020	Standardized Transport, Aging and Disposal Canister - 24 PWR Assemblies - Assembly & Details – Sheets 1 to 7
D-6a to D-6f	DWG-205577-ME-0025	Standardized Transport, Aging and Disposal Canister - 68 BWR Assemblies - Assembly & Details – Sheets 1 to 6

Figure D-1a. Standardized Transport, Aging and Disposal Canister - 4 PWR Assemblies - Assembly & Details – Sheet 1 of 4

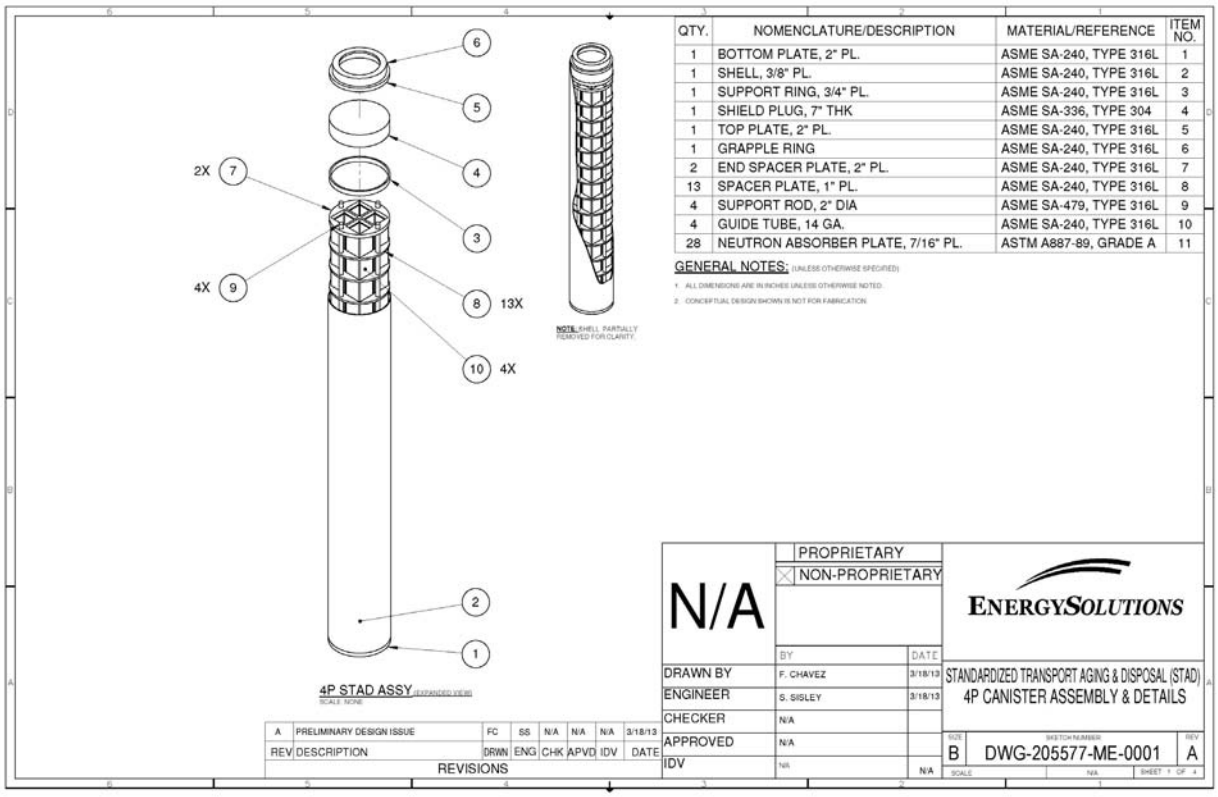

QTY.	NOMENCLATURE/DESCRIPTION	MATERIAL/REFERENCE	ITEM NO.
1	BOTTOM PLATE, 2" PL.	ASME SA-240, TYPE 316L	1
1	SHELL, 3/8" PL.	ASME SA-240, TYPE 316L	2
1	SUPPORT RING, 3/4" PL.	ASME SA-240, TYPE 316L	3
1	SHIELD PLUG, 7" THK	ASME SA-336, TYPE 304	4
1	TOP PLATE, 2" PL.	ASME SA-240, TYPE 316L	5
1	GRAPPLE RING	ASME SA-240, TYPE 316L	6
2	END SPACER PLATE, 2" PL.	ASME SA-240, TYPE 316L	7
13	SPACER PLATE, 1" PL.	ASME SA-240, TYPE 316L	8
4	SUPPORT ROD, 2" DIA	ASME SA-479, TYPE 316L	9
4	GUIDE TUBE, 14 GA.	ASME SA-240, TYPE 316L	10
28	NEUTRON ABSORBER PLATE, 7/16" PL.	ASTM A887-89, GRADE A	11

Figure D-1b. Standardized Transport, Aging and Disposal Canister – 4 PWR Assemblies- Assembly & Details – Sheet 2 of 4

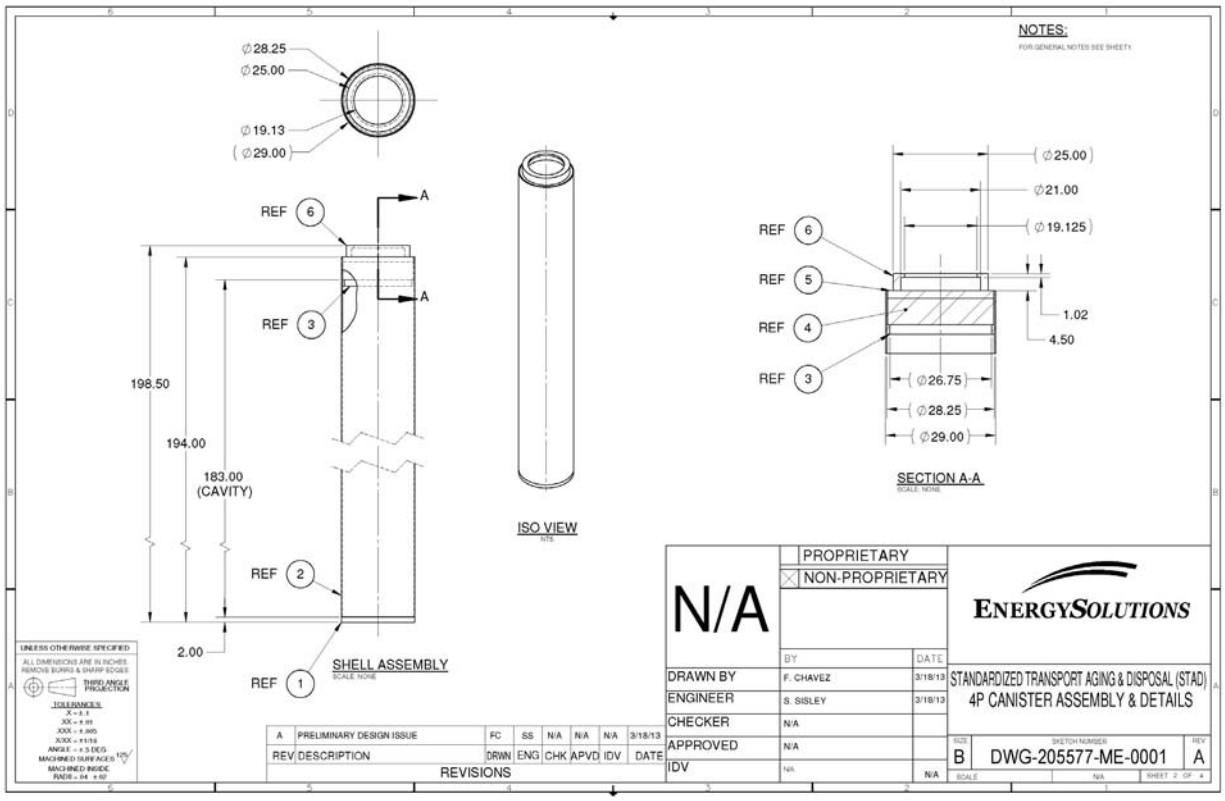

Figure D-1c. Standardized Transport, Aging and Disposal Canister - 4 PWR Assemblies - Assembly & Details – Sheet 3 of 4

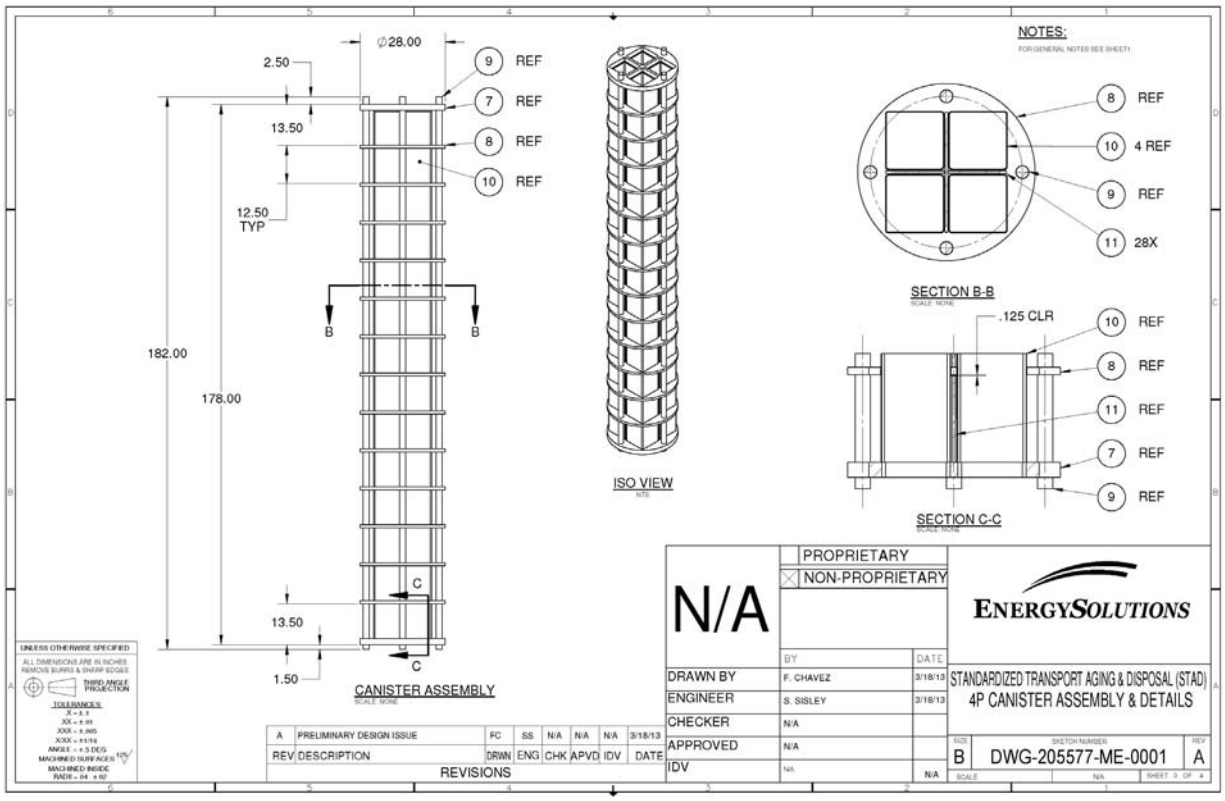

Figure D-1d. Standardized Transport, Aging and Disposal Canister – 4 PWR Assemblies - Assembly & Details – Sheet 4 of 4

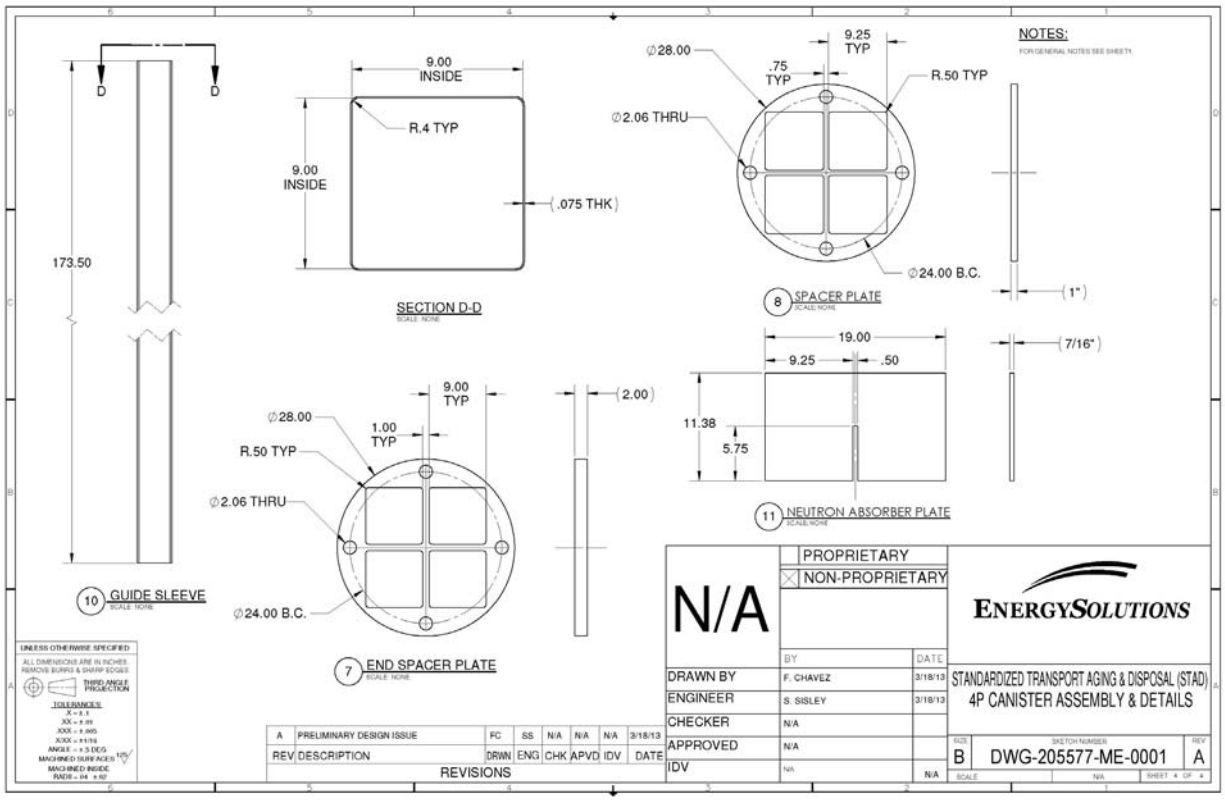

Figure D-2a. Standardized Transport, Aging and Disposal Canister - 9 BWR Assemblies - Assembly & Details – Sheet 1 of 4

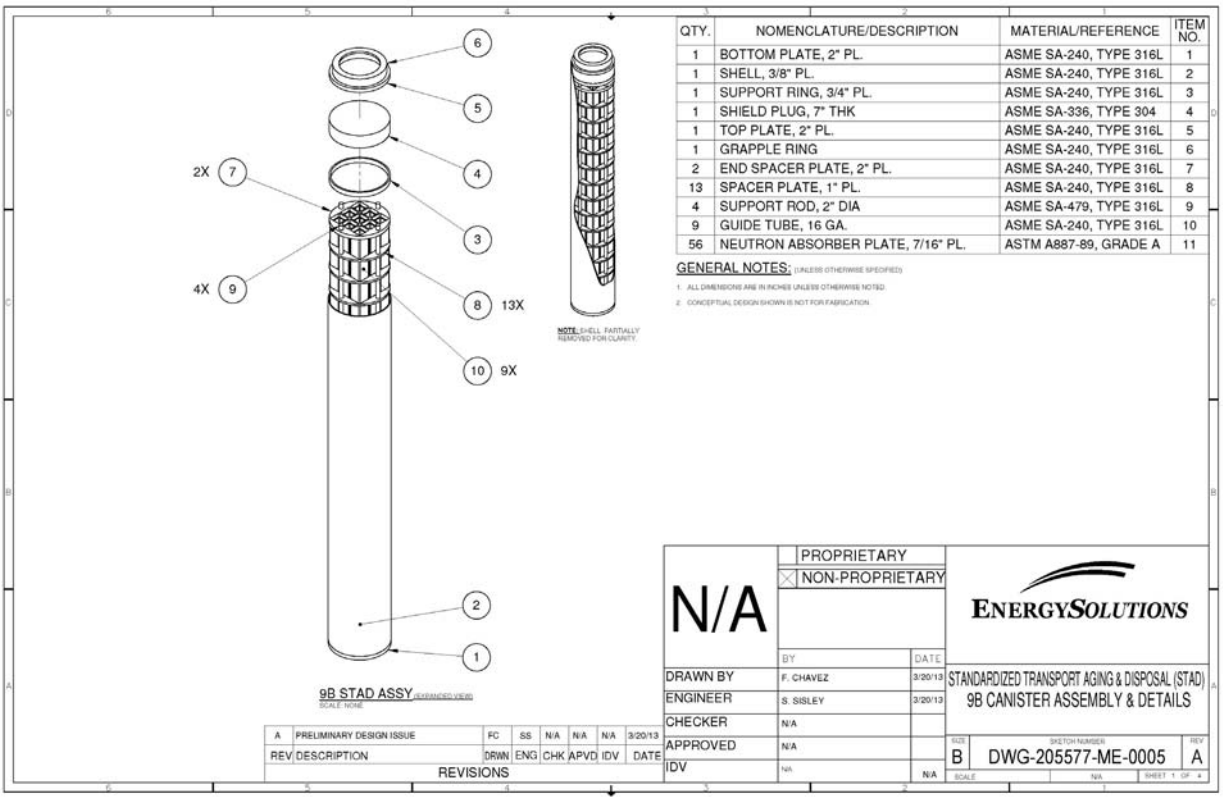

Figure D-2b. Standardized Transport, Aging and Disposal Canister - 9 BWR Assemblies - Assembly & Details – Sheet 2 of 4

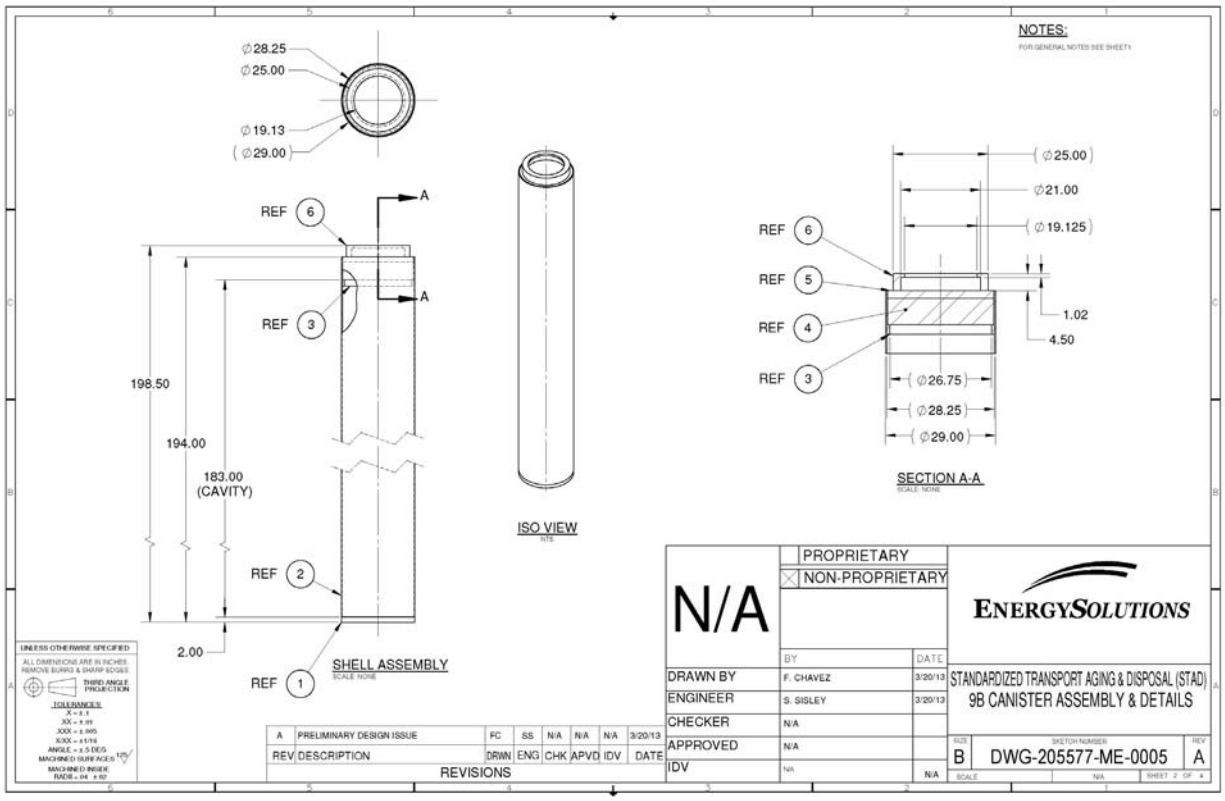

Figure D-2c. Standardized Transport, Aging and Disposal Canister - 9 BWR Assemblies - Assembly & Details – Sheet 3 of 4

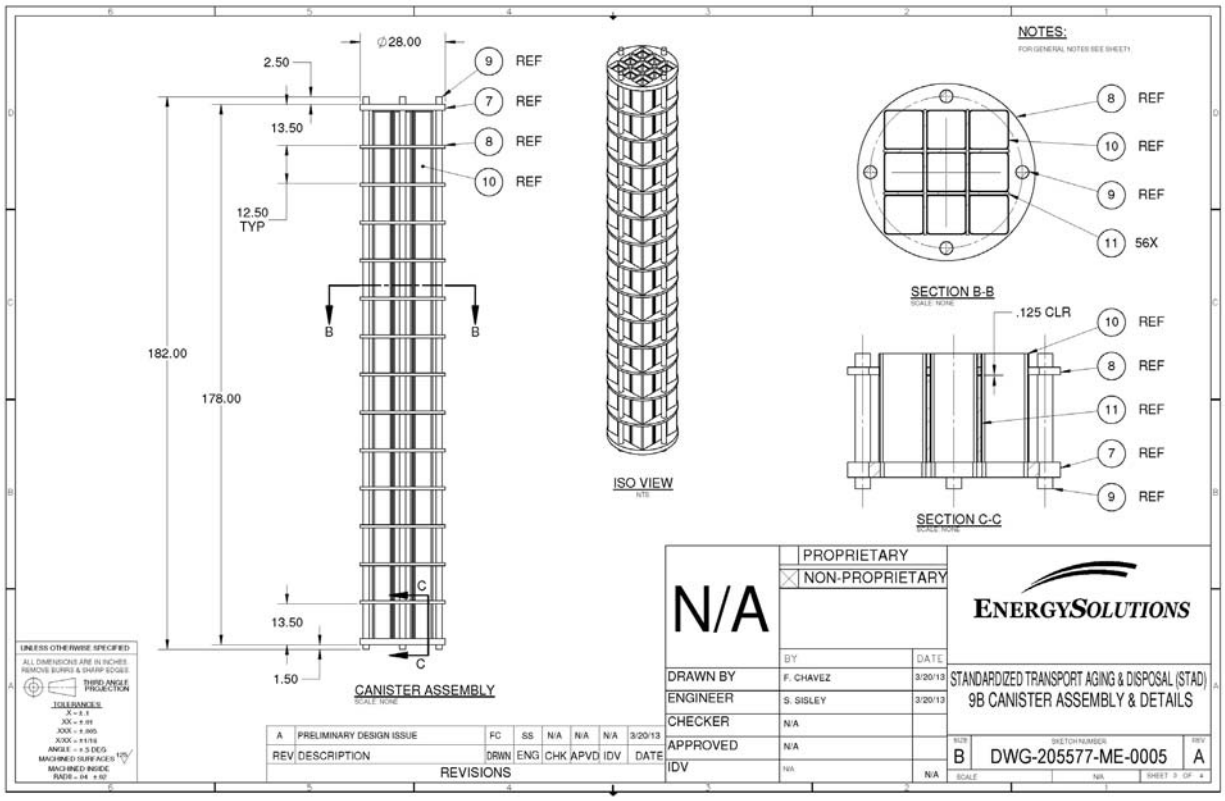

Figure D-2d. Standardized Transport, Aging and Disposal Canister - 9 BWR Assemblies - Assembly & Details – Sheet 4 of 4

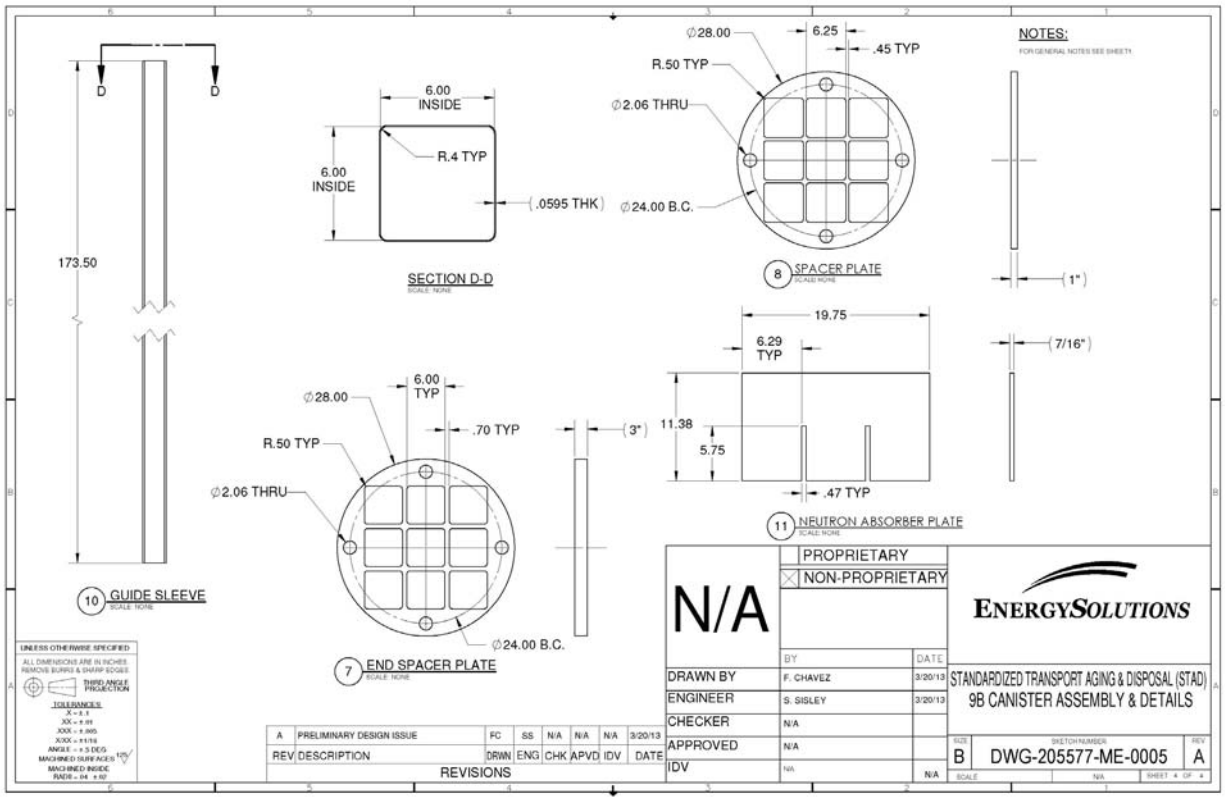

Figure D-3a. Standardized Transport, Aging and Disposal Canister - 12 PWR Assemblies - Assembly & Details – Sheet 1 of 7

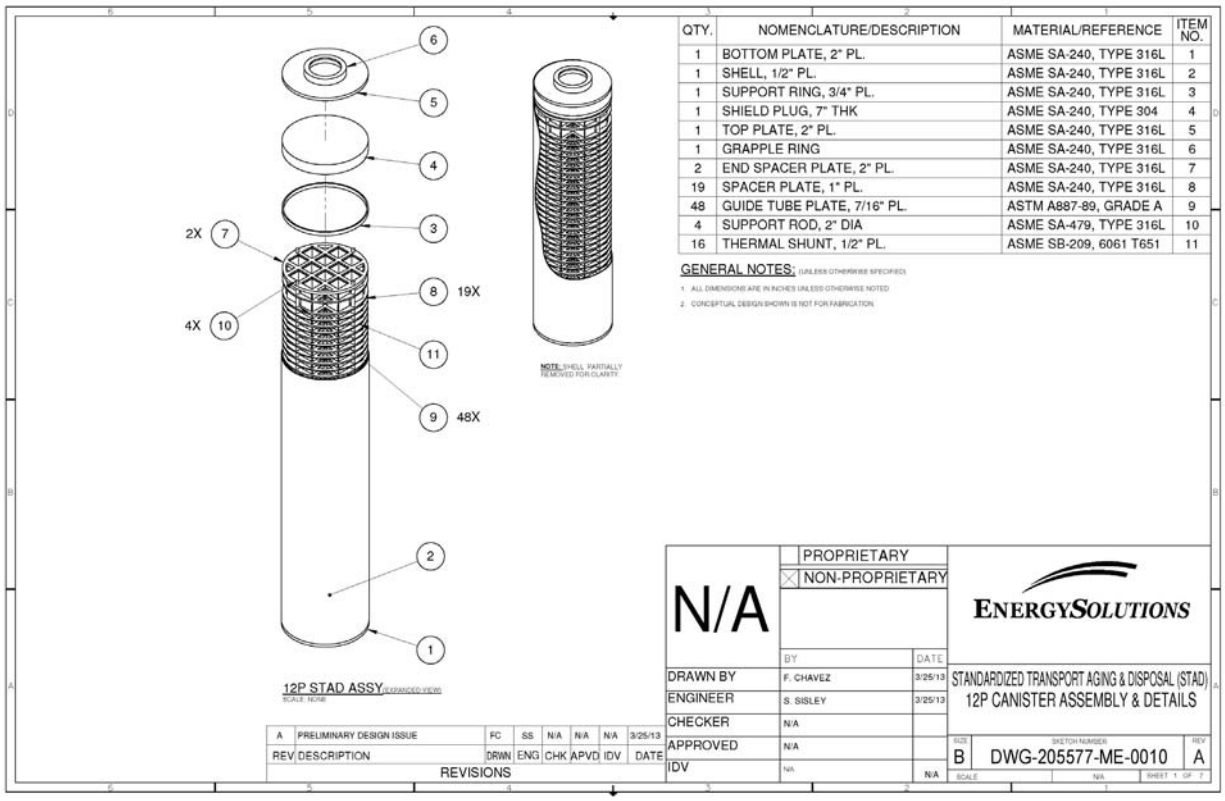

Figure D-3b. Standardized Transport, Aging and Disposal Canister - 12 PWR Assemblies - Assembly & Details – Sheet 2 of 7

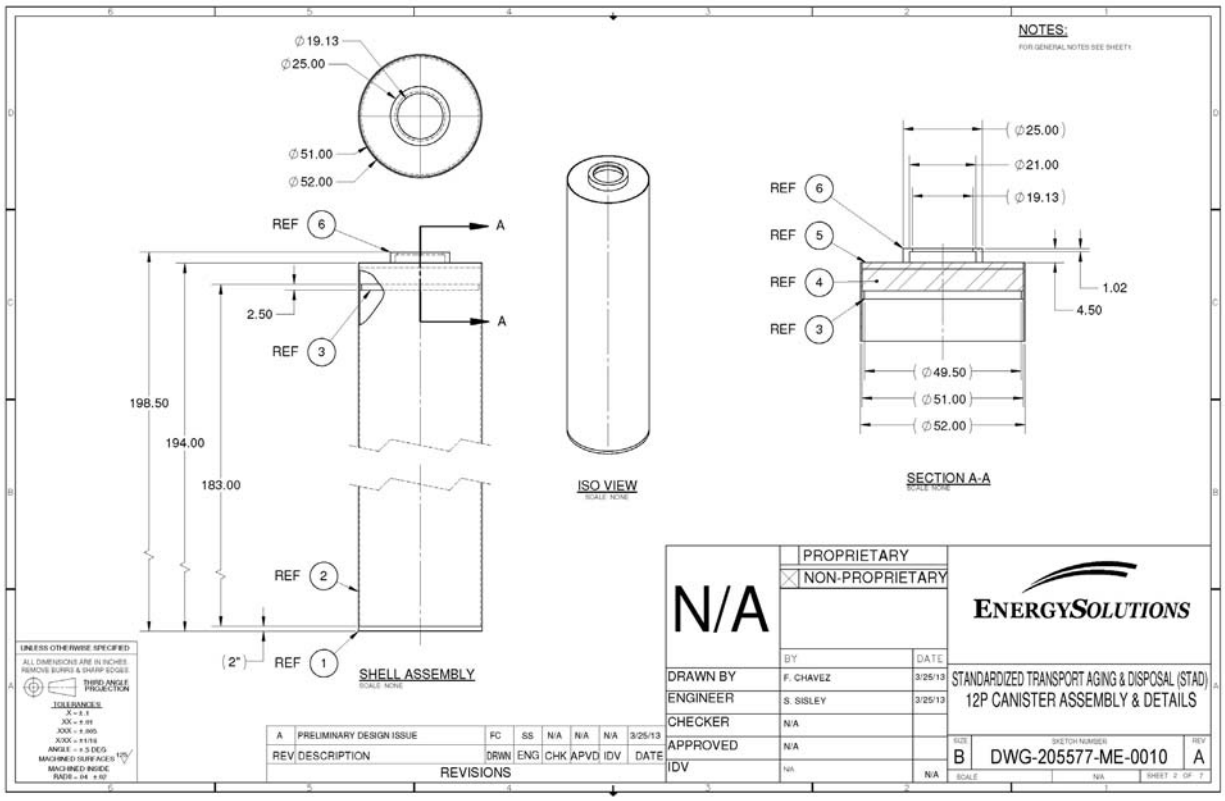

Figure D-3c. Standardized Transport, Aging and Disposal Canister - 12 PWR Assemblies - Assembly & Details – Sheet 3 of 7

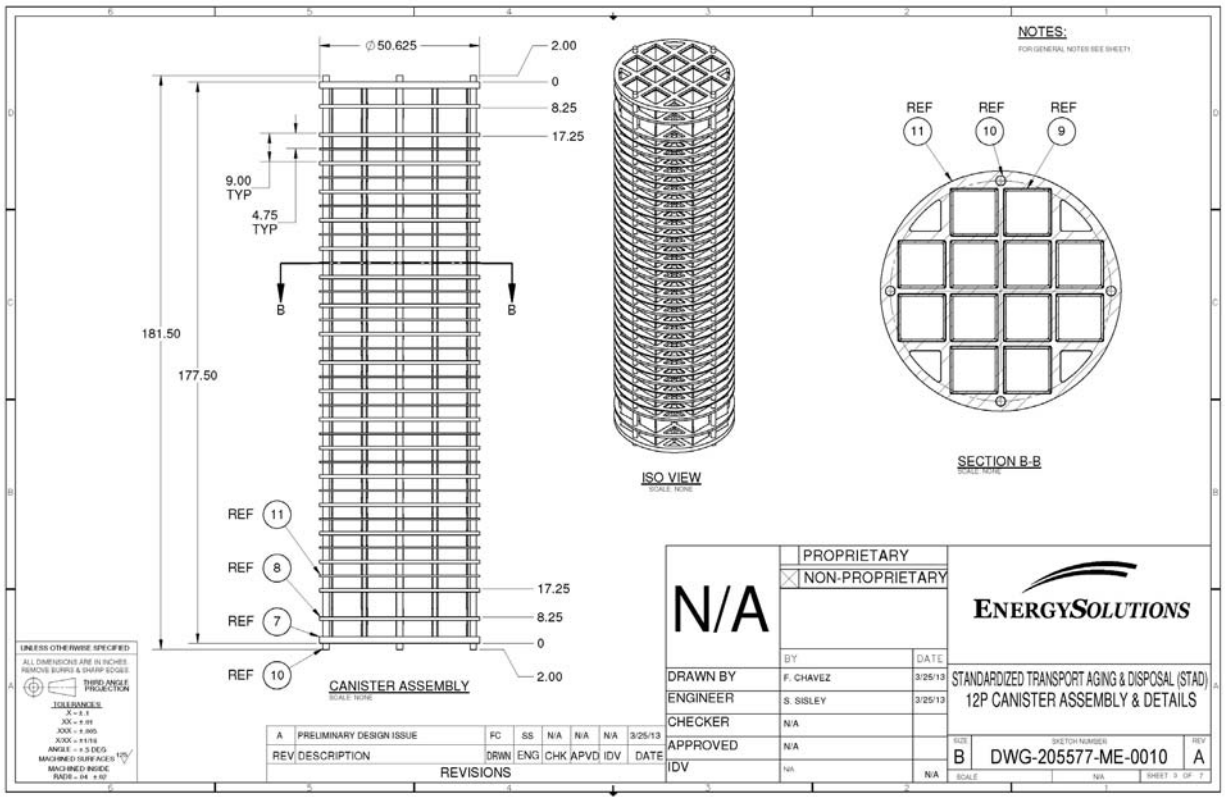

Figure D-3d. Standardized Transport, Aging and Disposal Canister - 12 PWR Assemblies - Assembly & Details – Sheet 4 of 7

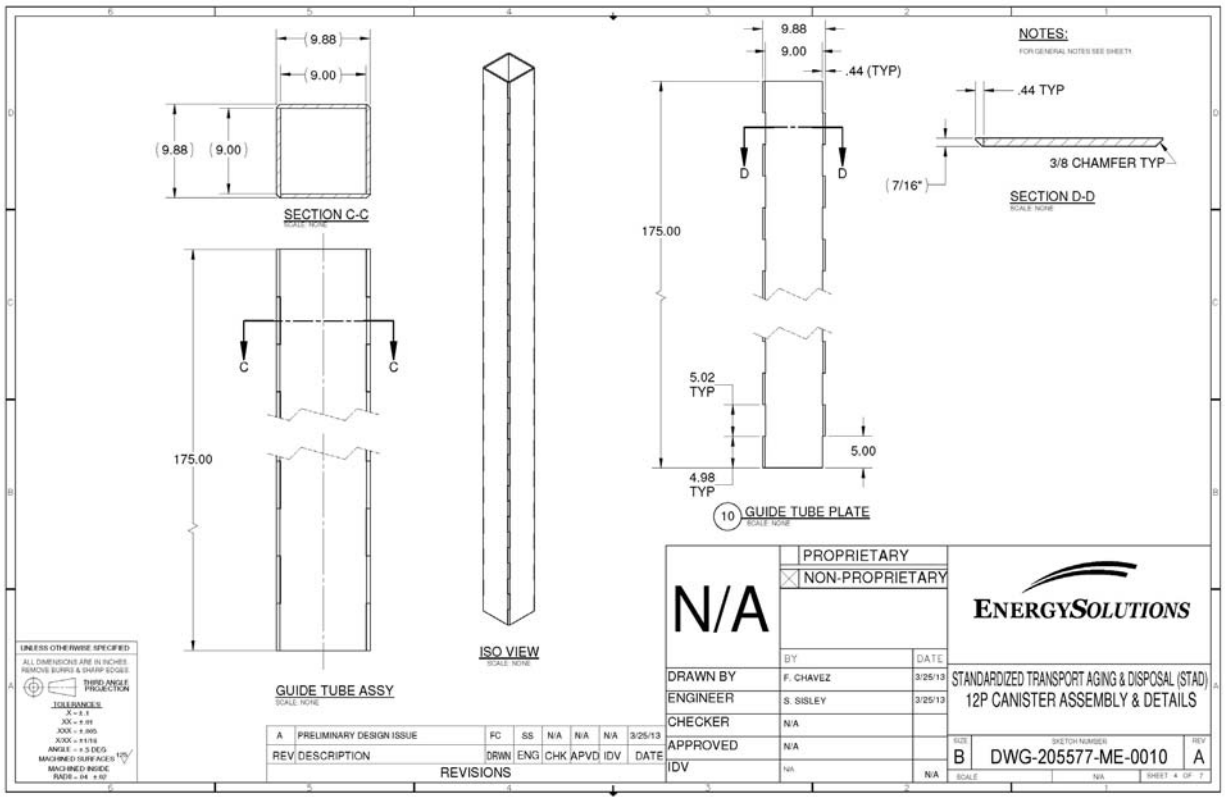

Figure D-3e. Standardized Transport, Aging and Disposal Canister - 12 PWR Assemblies - Assembly & Details – Sheet 5 of 7

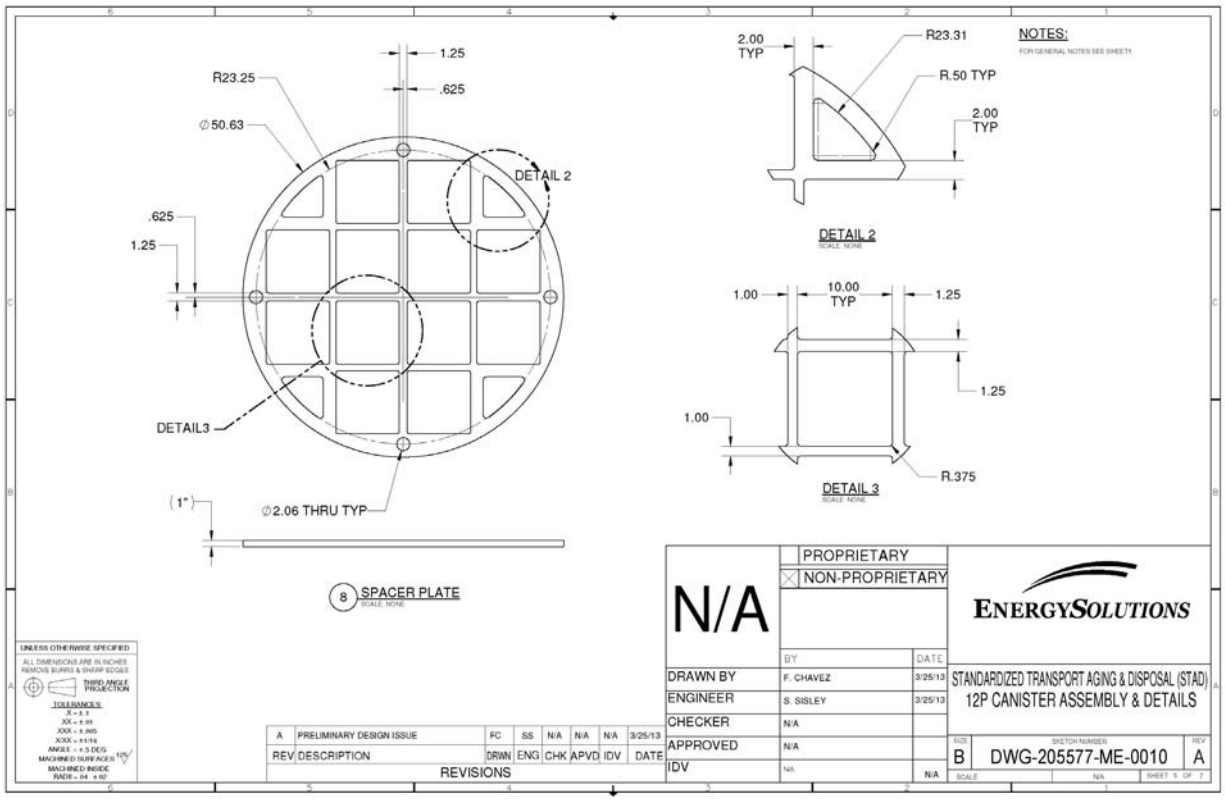

Figure D-3f. Standardized Transport, Aging and Disposal Canister - 12 PWR Assemblies - Assembly & Details – Sheet 6 of 7

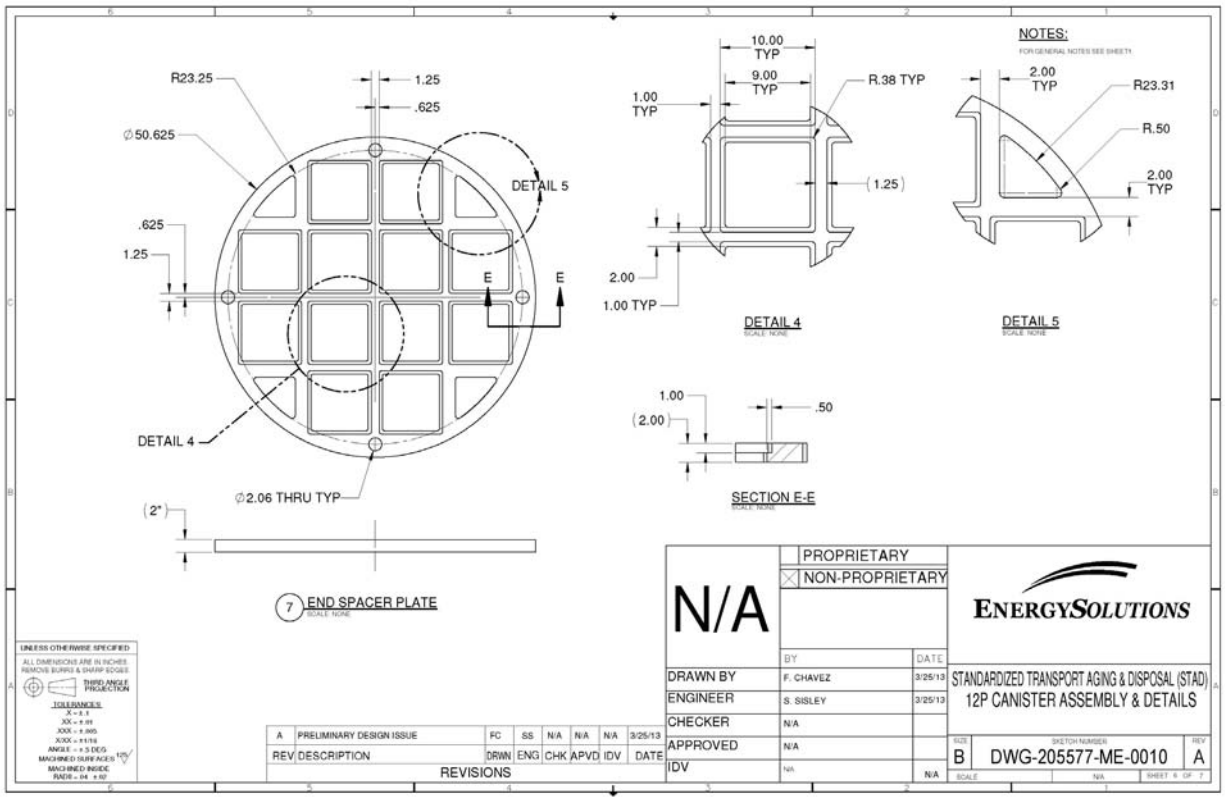

Figure D-3f. Standardized Transport, Aging and Disposal Canister - 12 PWR Assemblies - Assembly & Details – Sheet 7 of 7

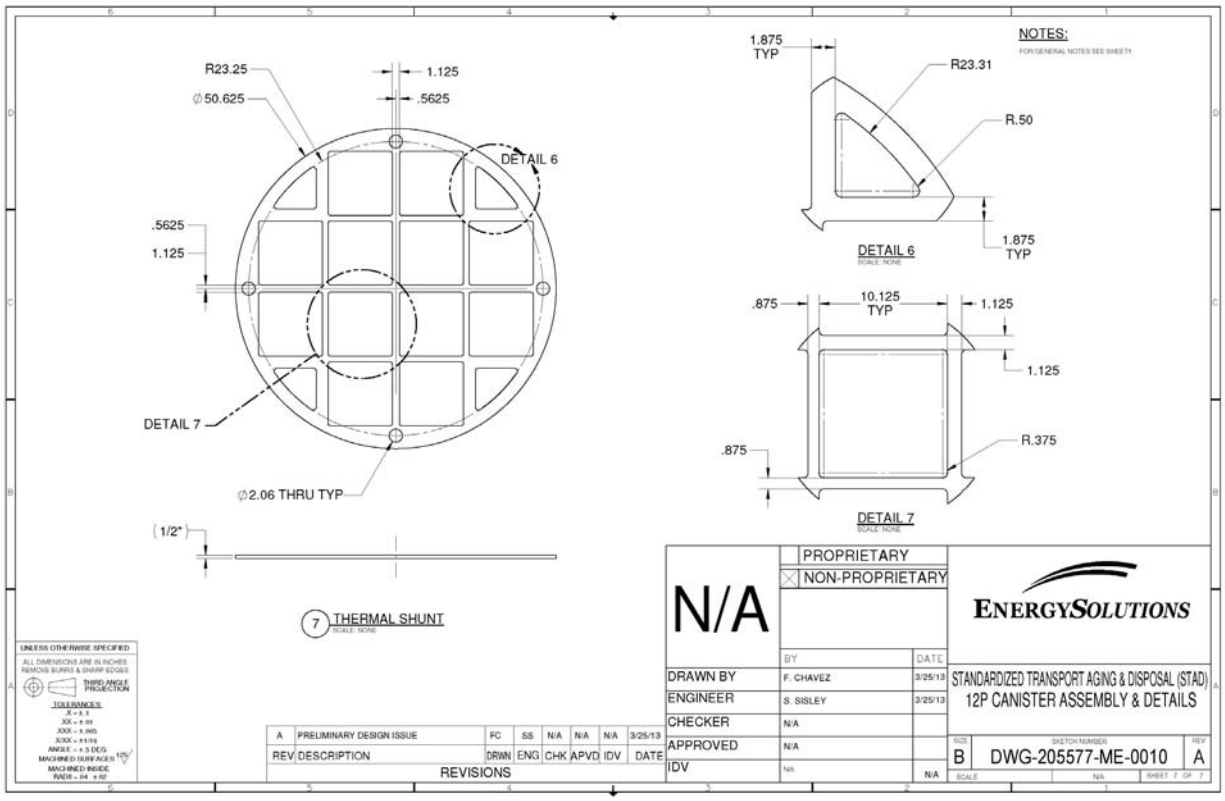

Figure D-4a. Standardized Transport, Aging and Disposal Canister - 32 BWR Assemblies - Assembly & Details – Sheet 1 of 5

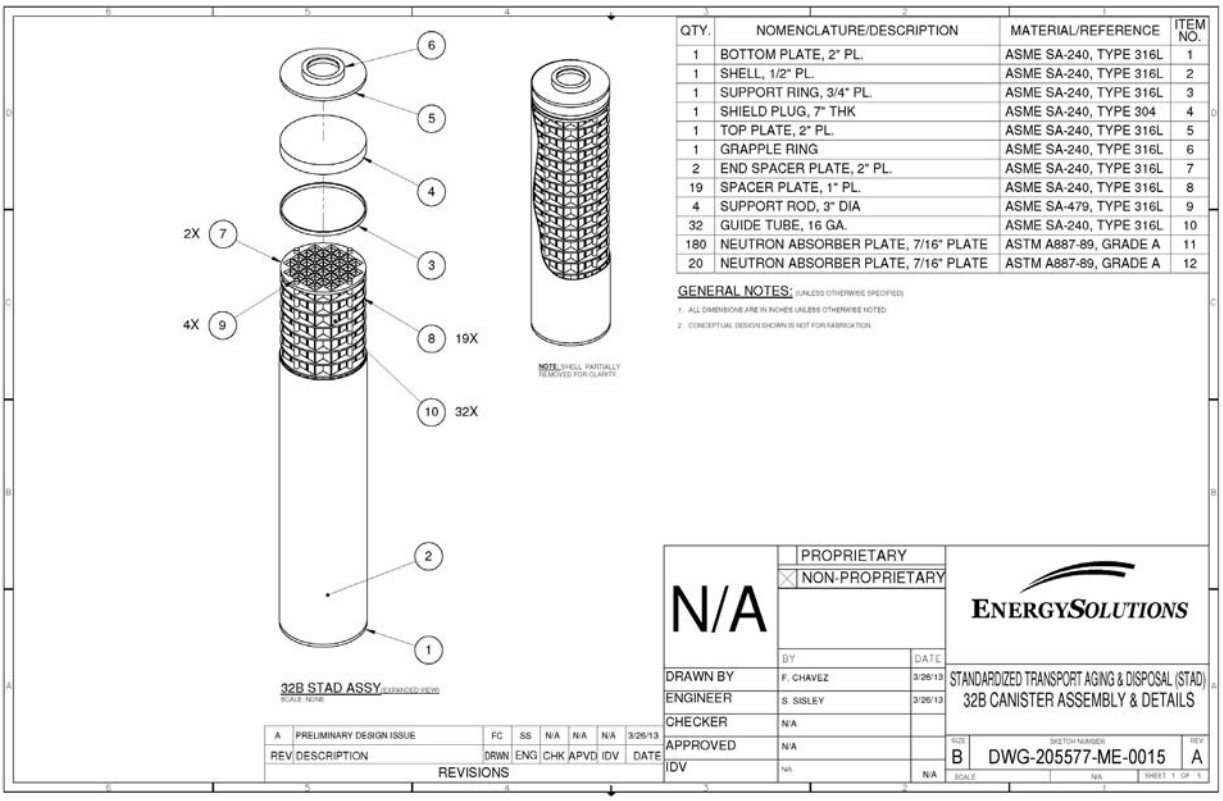

QTY.	NOMENCLATURE/DESCRIPTION	MATERIAL/REFERENCE	ITEM NO.
1	BOTTOM PLATE, 2" PL.	ASME SA-240, TYPE 316L	1
1	SHELL, 1/2" PL.	ASME SA-240, TYPE 316L	2
1	SUPPORT RING, 3/4" PL.	ASME SA-240, TYPE 316L	3
1	SHIELD PLUG, 7" THK	ASME SA-240, TYPE 304	4
1	TOP PLATE, 2" PL.	ASME SA-240, TYPE 316L	5
1	GRAPPLE RING	ASME SA-240, TYPE 316L	6
2	END SPACER PLATE, 2" PL.	ASME SA-240, TYPE 316L	7
19	SPACER PLATE, 1" PL.	ASME SA-240, TYPE 316L	8
4	SUPPORT ROD, 3" DIA	ASME SA-479, TYPE 316L	9
32	GUIDE TUBE, 16 GA.	ASME SA-240, TYPE 316L	10
180	NEUTRON ABSORBER PLATE, 7/16" PLATE	ASTM A887-89, GRADE A	11
20	NEUTRON ABSORBER PLATE, 7/16" PLATE	ASTM A887-89, GRADE A	12

Figure D-4b. Standardized Transport, Aging and Disposal Canister - 32 BWR Assemblies - Assembly & Details – Sheet 2 of 5

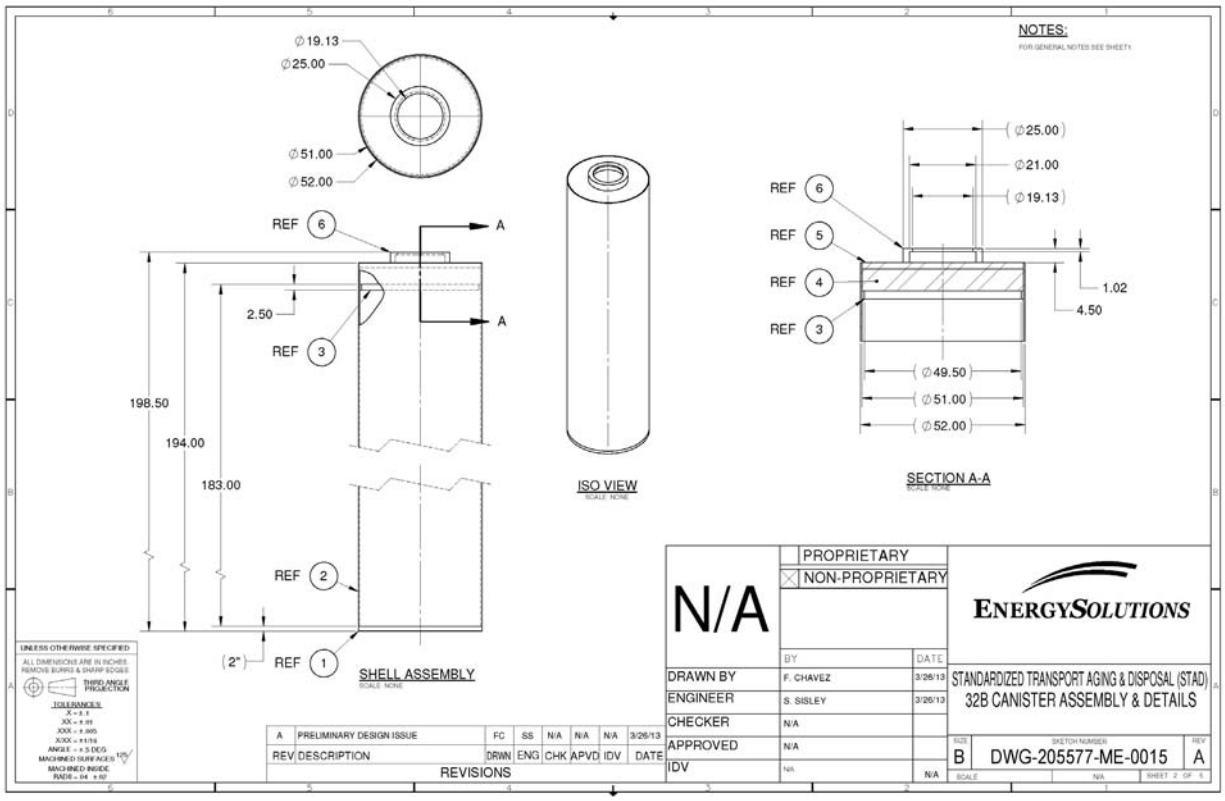

Figure D-4c. Standardized Transport, Aging and Disposal Canister - 32 BWR Assemblies - Assembly & Details – Sheet 3 of 5

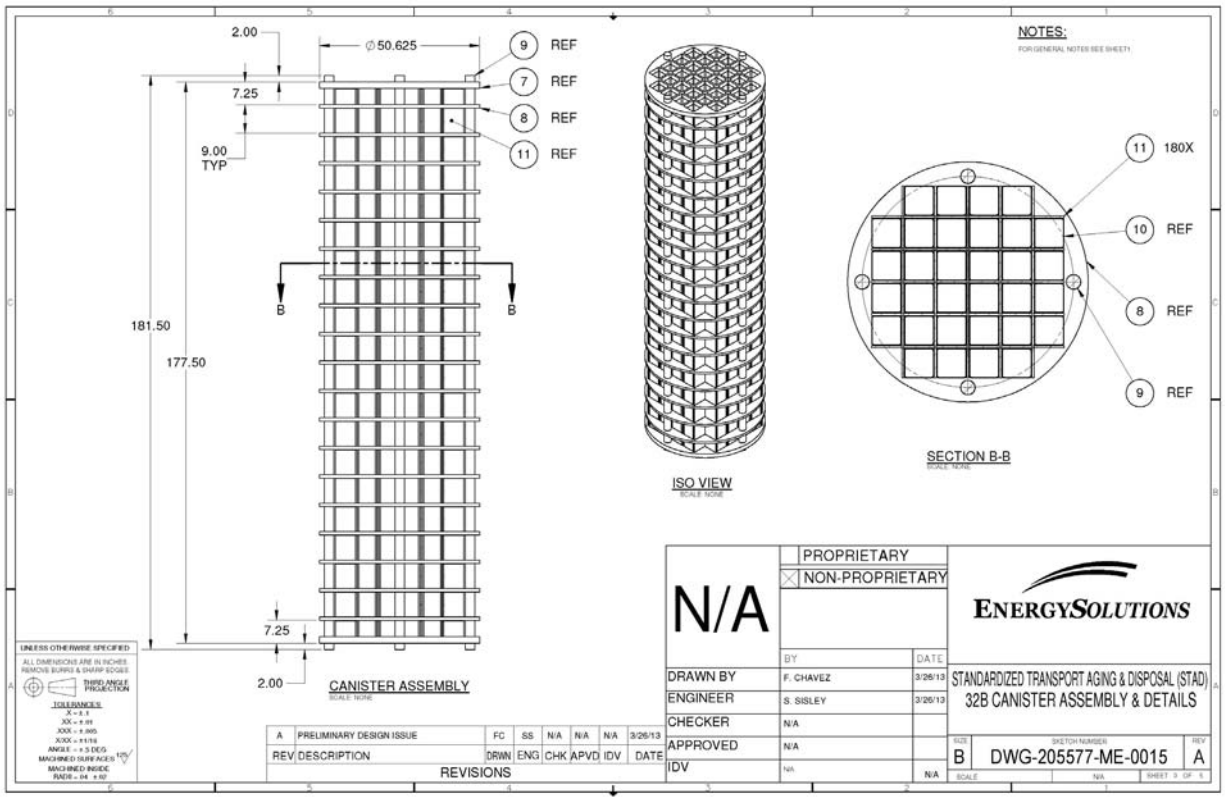

Figure D-4d. Standardized Transport, Aging and Disposal Canister - 32 BWR Assemblies - Assembly & Details – Sheet 4 of 5

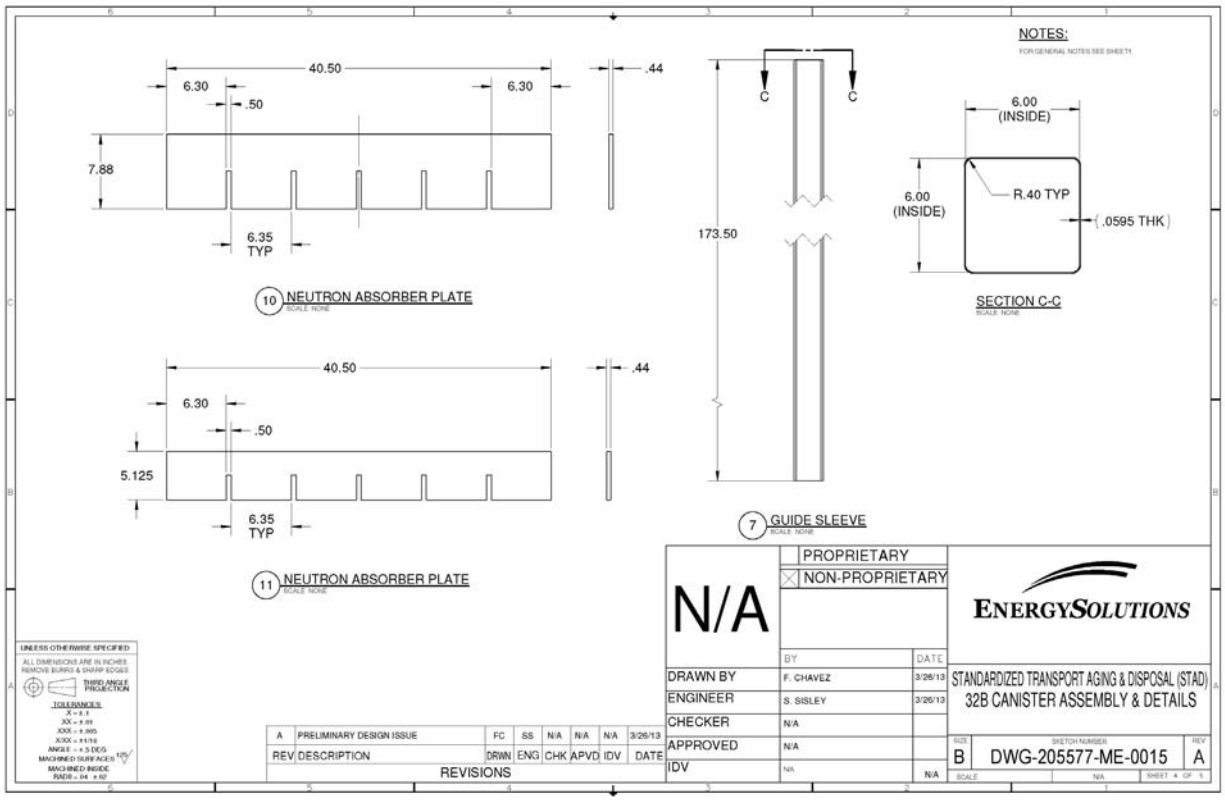

Figure D-4e. Standardized Transport, Aging and Disposal Canister - 32 BWR Assemblies - Assembly & Details – Sheet 5 of 5

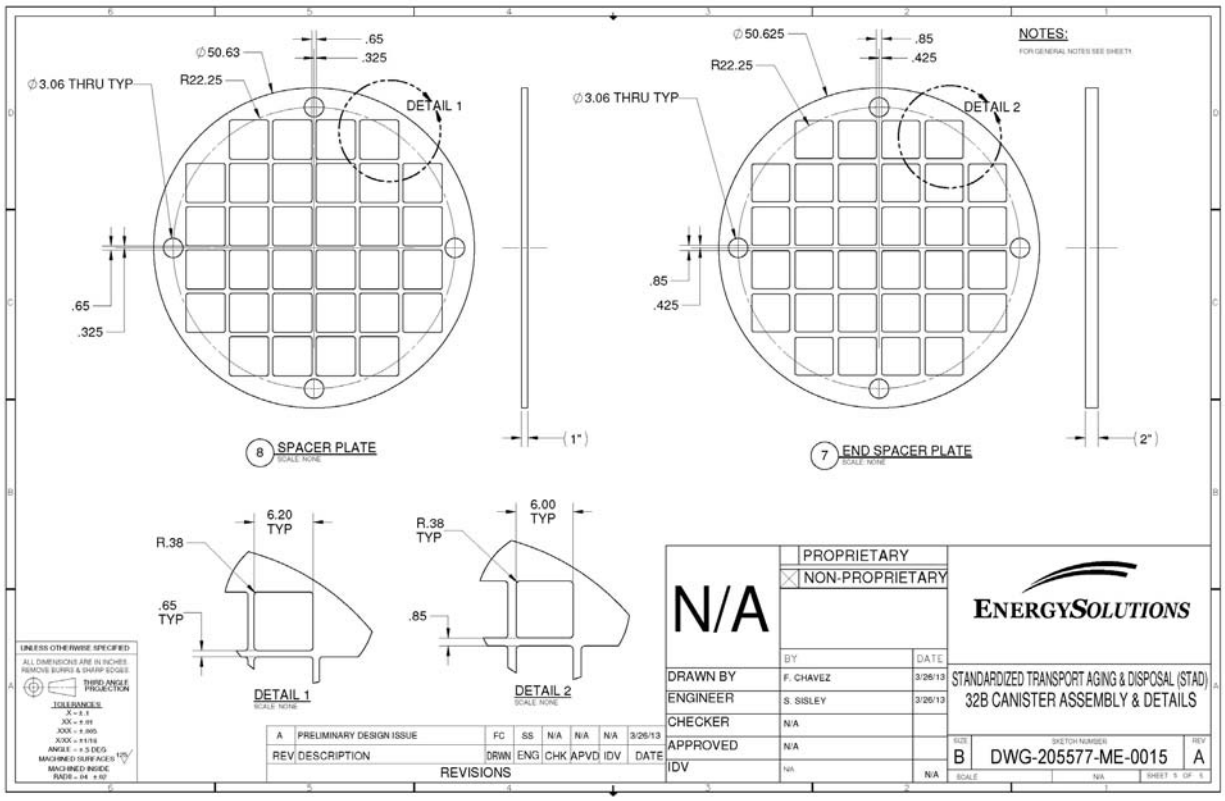

Figure D-5a. Standardized Transport, Aging and Disposal Canister - 24 PWR Assemblies - Assembly & Details – Sheet 1 of 7

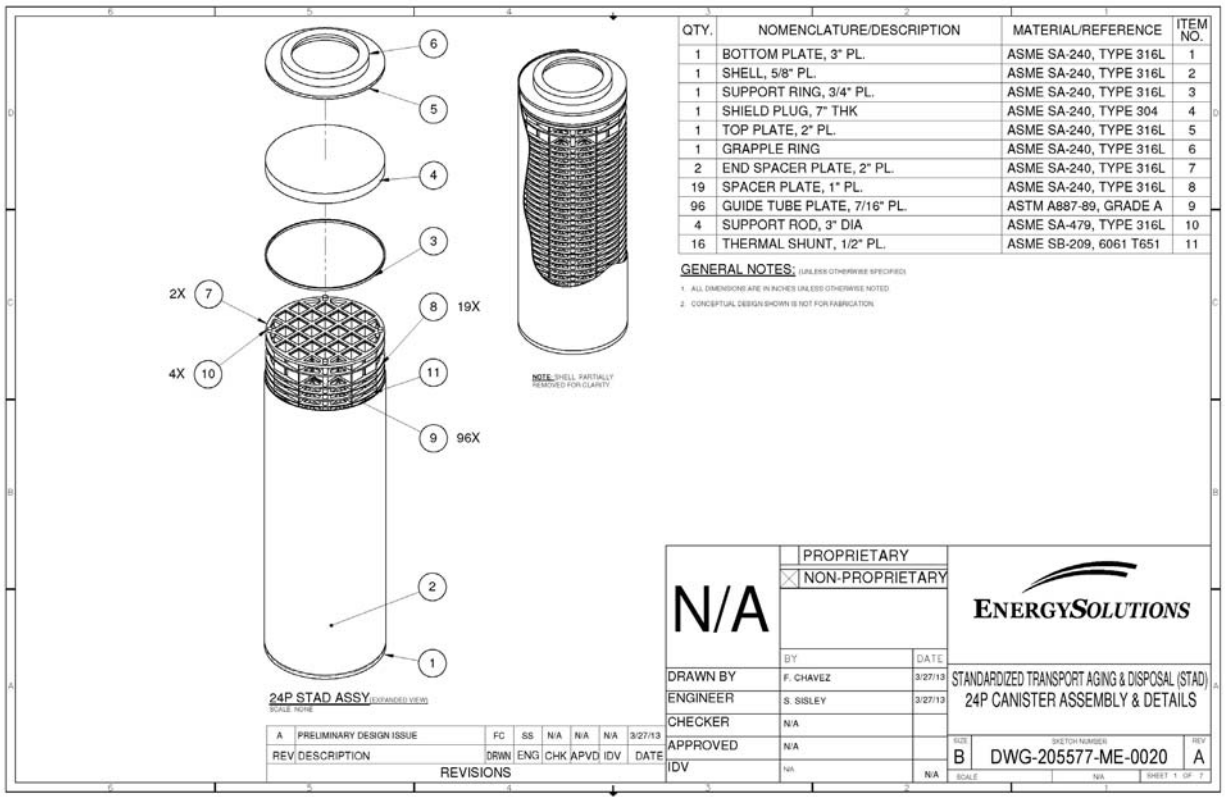

QTY.	NOMENCLATURE/DESCRIPTION	MATERIAL/REFERENCE	ITEM NO.
1	BOTTOM PLATE, 3" PL.	ASME SA-240, TYPE 316L	1
1	SHELL, 5/8" PL.	ASME SA-240, TYPE 316L	2
1	SUPPORT RING, 3/4" PL.	ASME SA-240, TYPE 316L	3
1	SHIELD PLUG, 7" THK	ASME SA-240, TYPE 304	4
1	TOP PLATE, 2" PL.	ASME SA-240, TYPE 316L	5
1	GRAPPLE RING	ASME SA-240, TYPE 316L	6
2	END SPACER PLATE, 2" PL.	ASME SA-240, TYPE 316L	7
19	SPACER PLATE, 1" PL.	ASME SA-240, TYPE 316L	8
96	GUIDE TUBE PLATE, 7/16" PL.	ASTM A887-89, GRADE A	9
4	SUPPORT ROD, 3" DIA	ASME SA-479, TYPE 316L	10
16	THERMAL SHUNT, 1/2" PL.	ASME SB-209, 6061 T651	11

Figure D-5b. Standardized Transport, Aging and Disposal Canister - 24 PWR Assemblies - Assembly & Details – Sheet 2 of 7

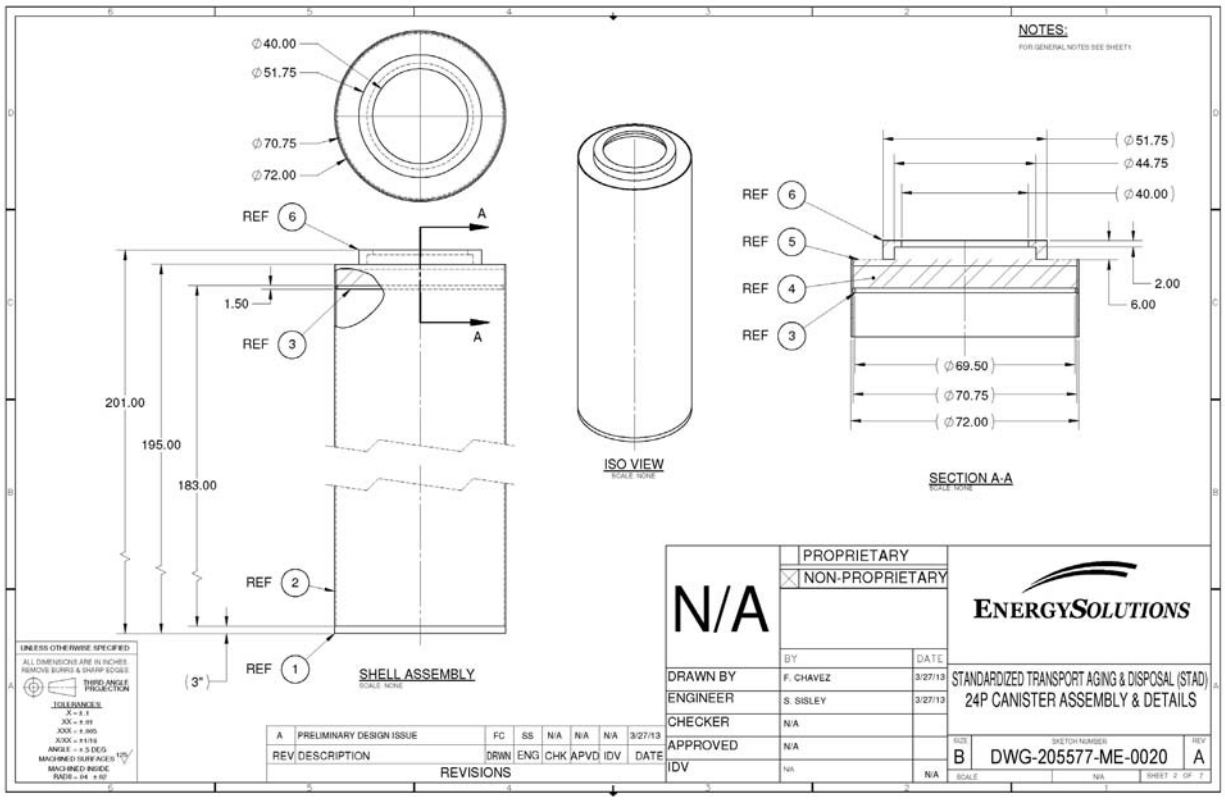

Figure D-5c. Standardized Transport, Aging and Disposal Canister - 24 PWR Assemblies - Assembly & Details – Sheet 3 of 7

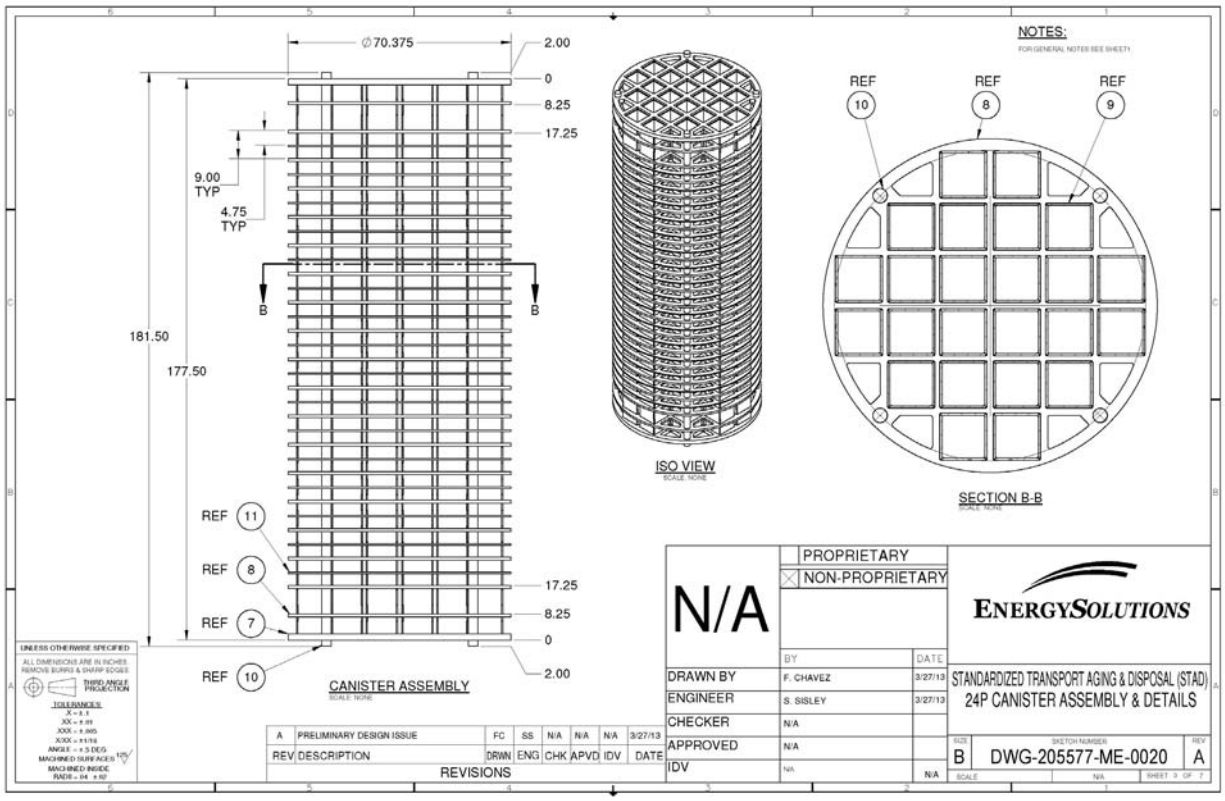

Figure D-5d. Standardized Transport, Aging and Disposal Canister - 24 PWR Assemblies - Assembly & Details – Sheet 4 of 7

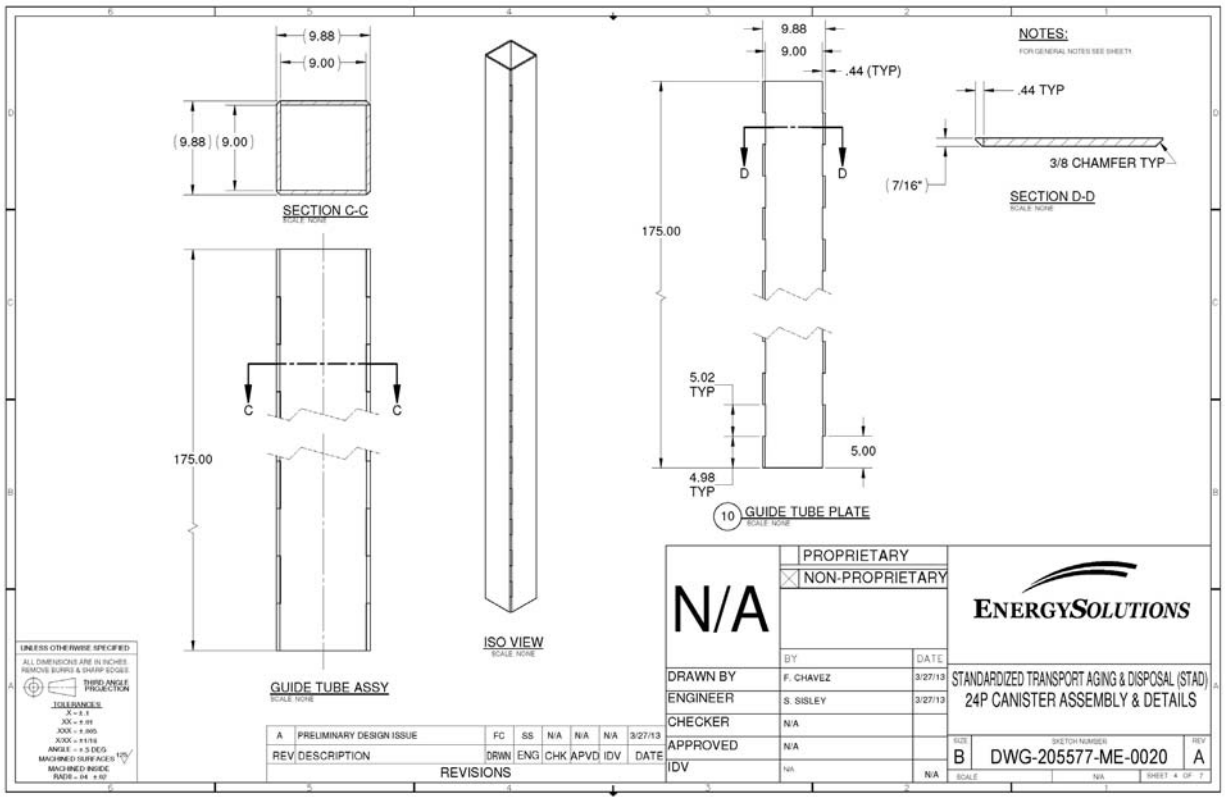

Figure D-5e. Standardized Transport, Aging and Disposal Canister - 24 PWR Assemblies - Assembly & Details – Sheet 5 of 7

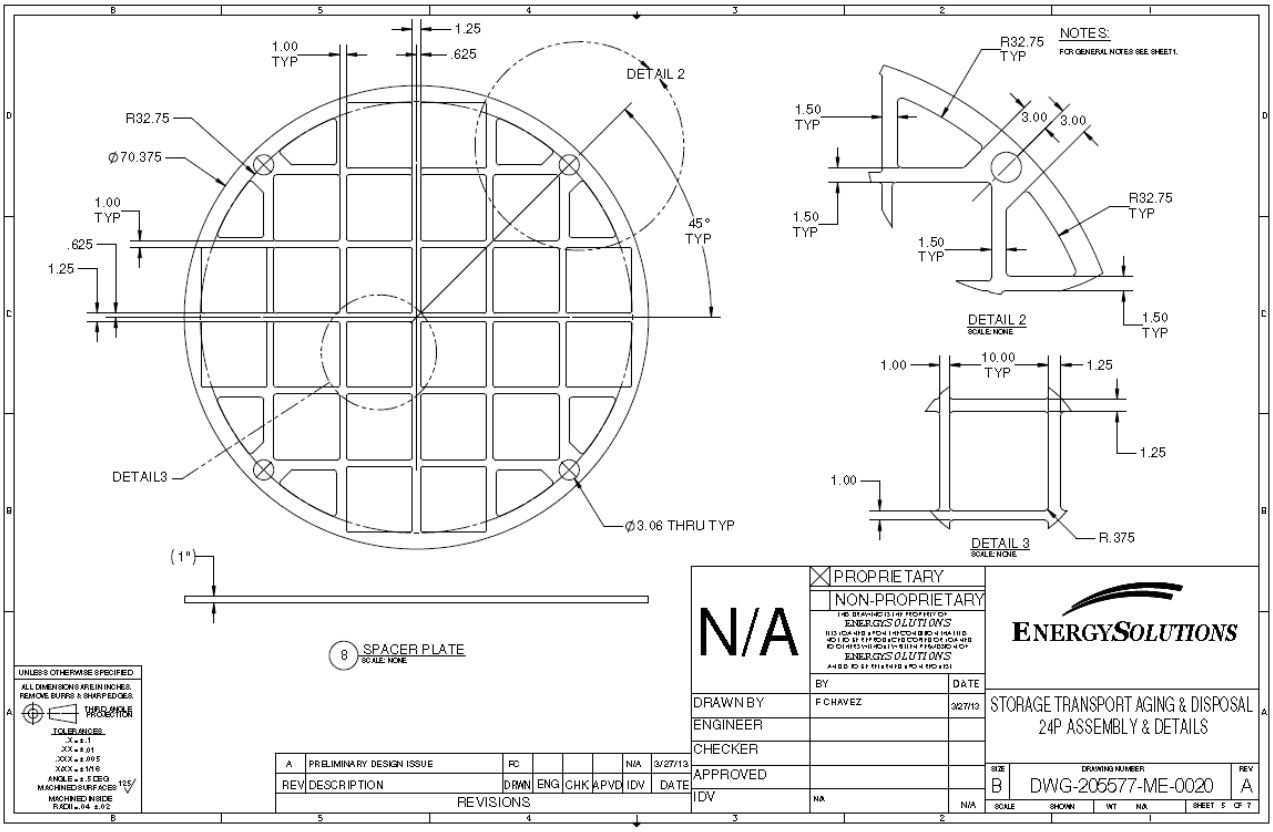

Figure D-5f. Standardized Transport, Aging and Disposal Canister - 24 PWR Assemblies - Assembly & Details – Sheet 6 of 7

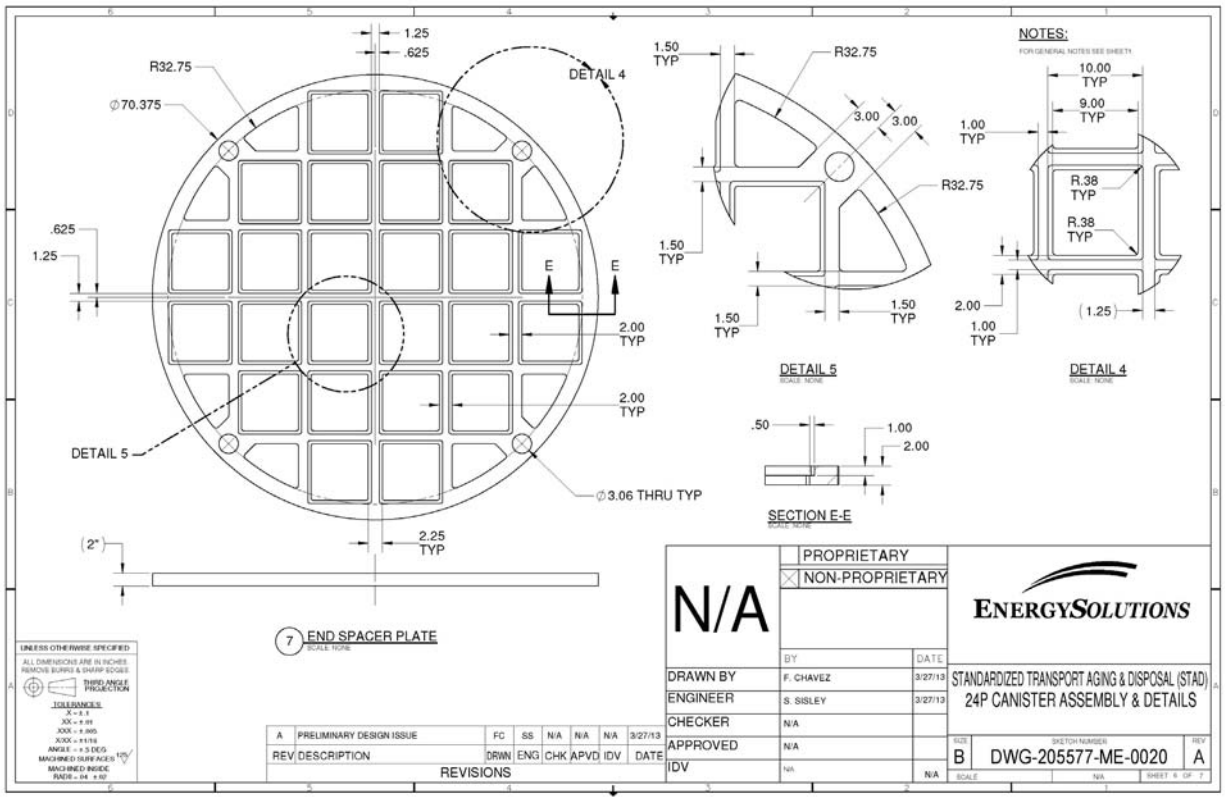

Figure D-5g. Standardized Transport, Aging and Disposal Canister - 24 PWR Assemblies - Assembly & Details – Sheet 7 of 7

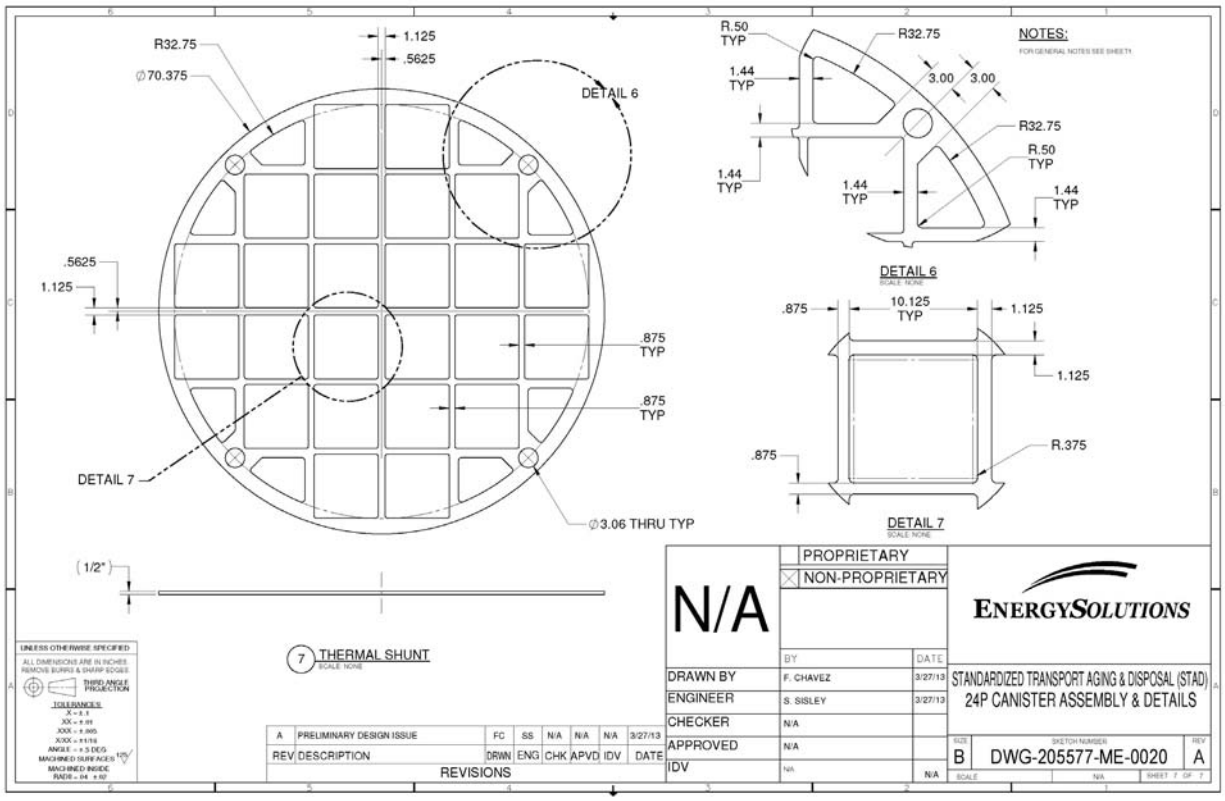

Figure D-6a. Standardized Transport, Aging and Disposal Canister - 68 BWR Assemblies - Assembly & Details – Sheet 1 of 6

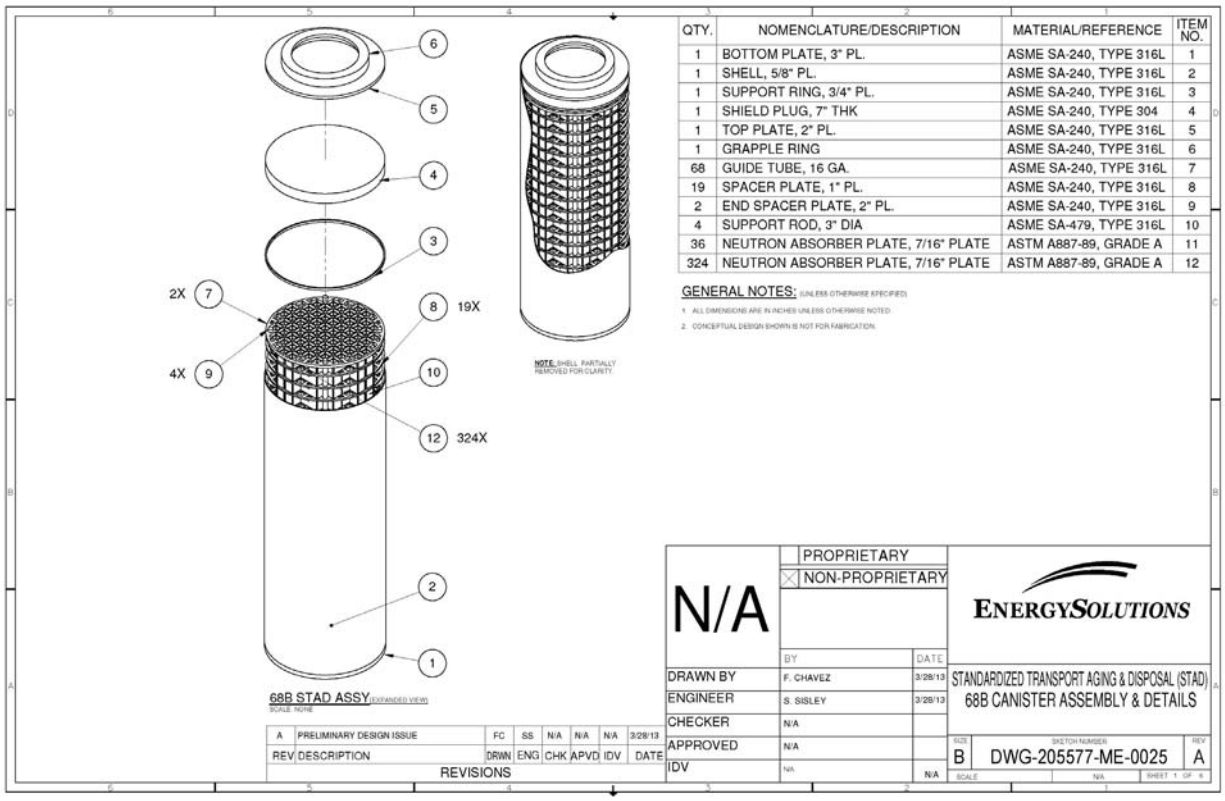

Figure D-6b. Standardized Transport, Aging and Disposal Canister - 68 BWR Assemblies - Assembly & Details – Sheet 2 of 6

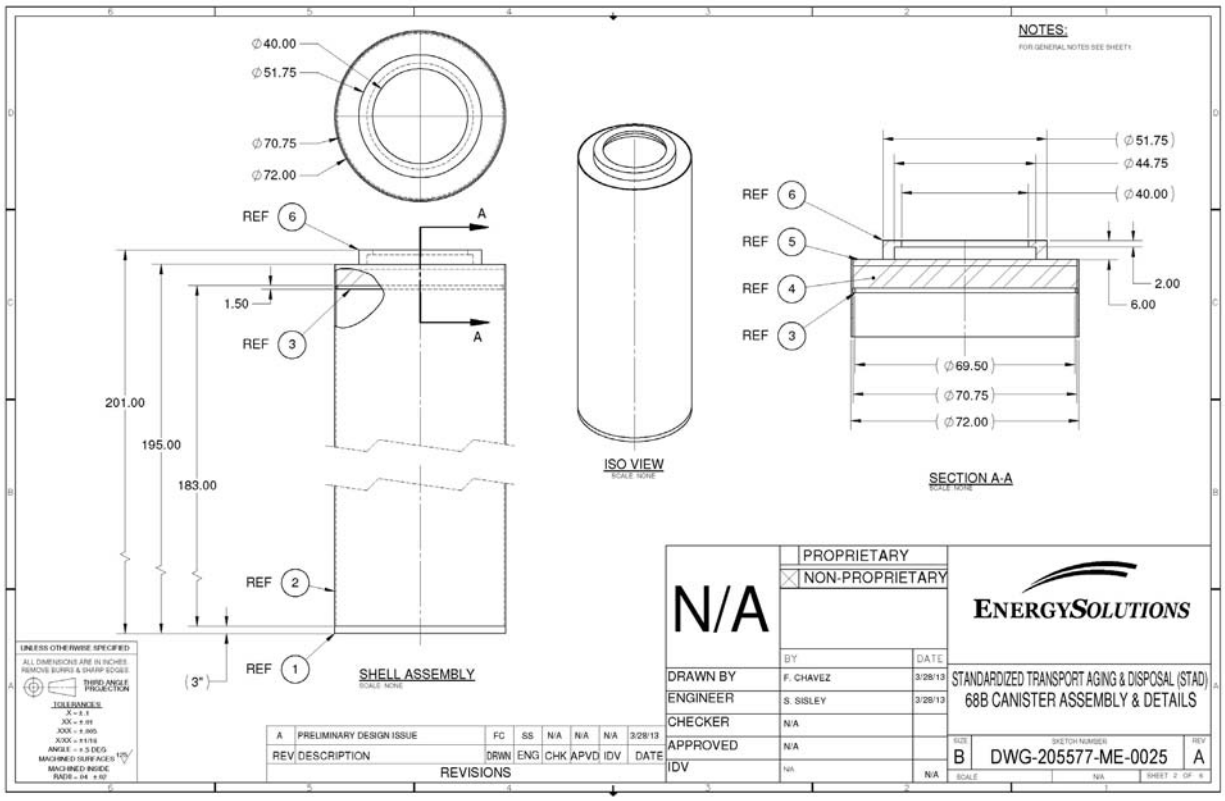

Figure D-6c. Standardized Transport, Aging and Disposal Canister - 68 BWR Assemblies - Assembly & Details – Sheet 3 of 6

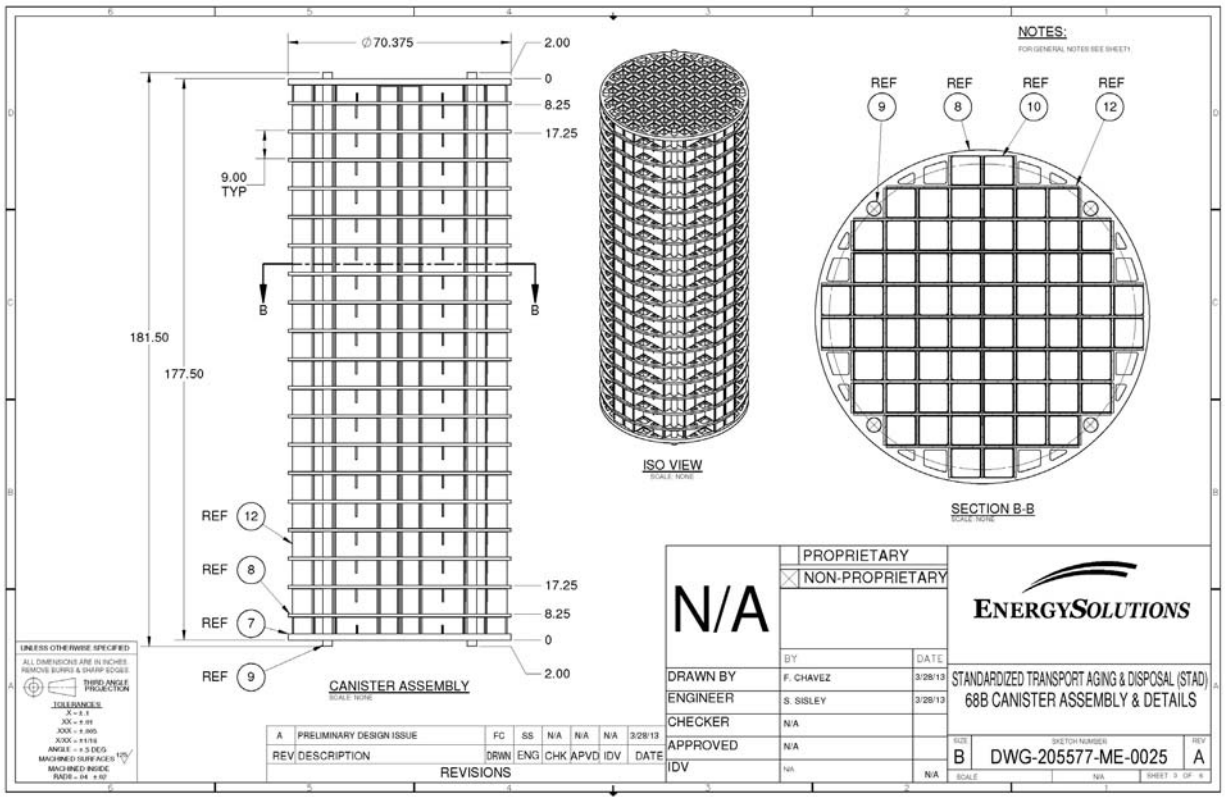

Figure D-6d. Standardized Transport, Aging and Disposal Canister - 68 BWR Assemblies - Assembly & Details – Sheet 4 of 6

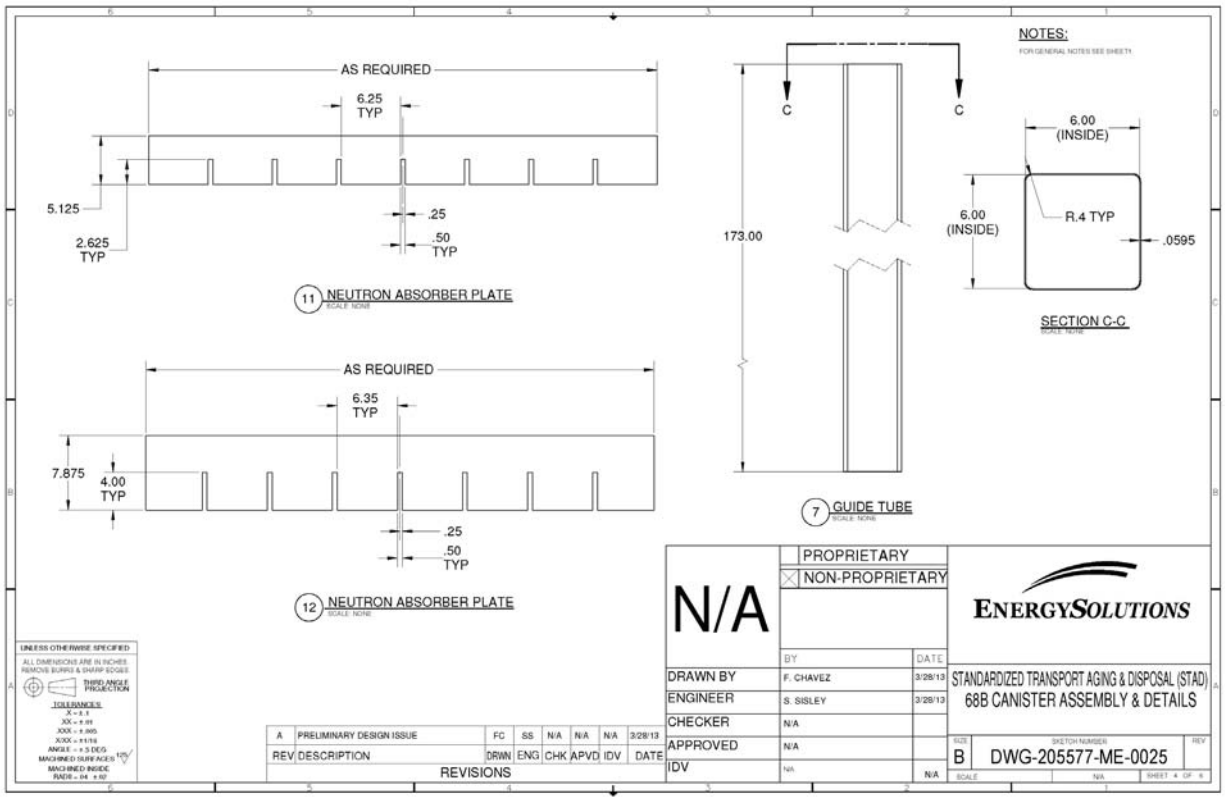

Figure D-6e. Standardized Transport, Aging and Disposal Canister - 68 BWR Assemblies - Assembly & Details – Sheet 5 of 6

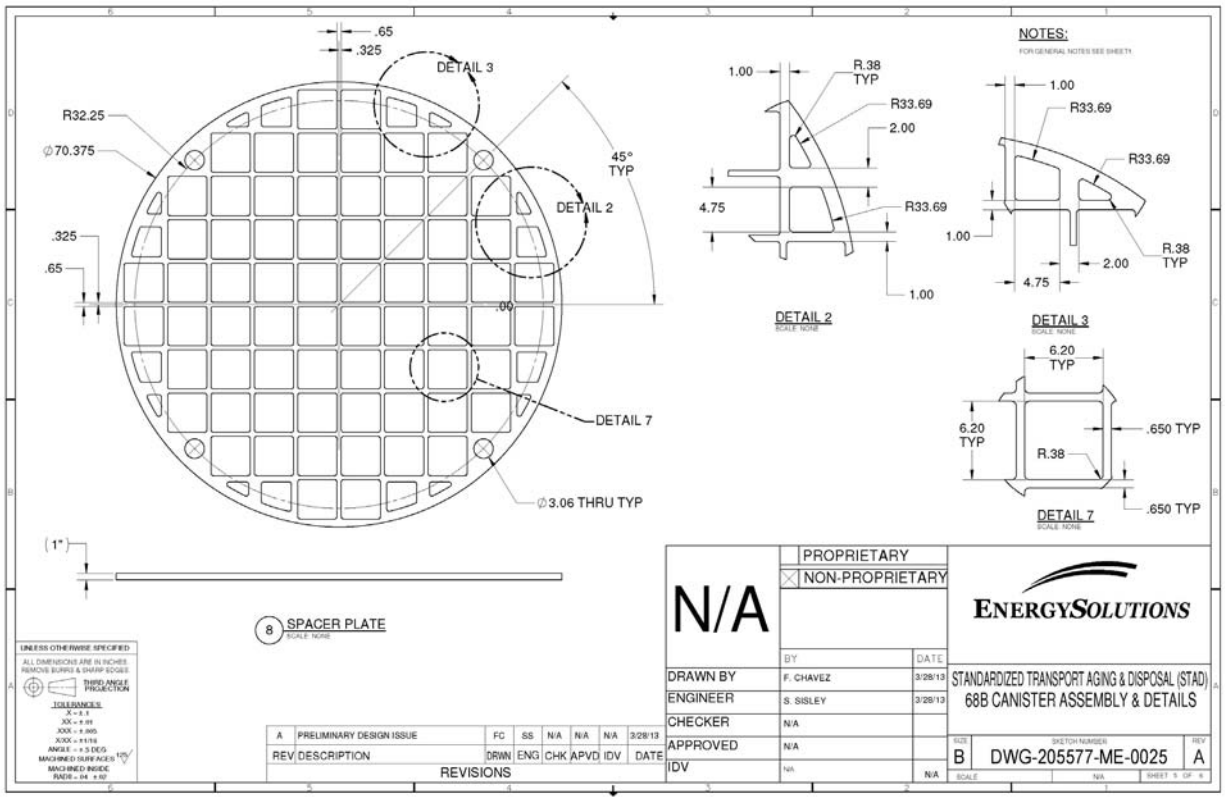

Figure D-6f. Standardized Transport, Aging and Disposal Canister - 68 BWR Assemblies - Assembly & Details – Sheet 6 of 6

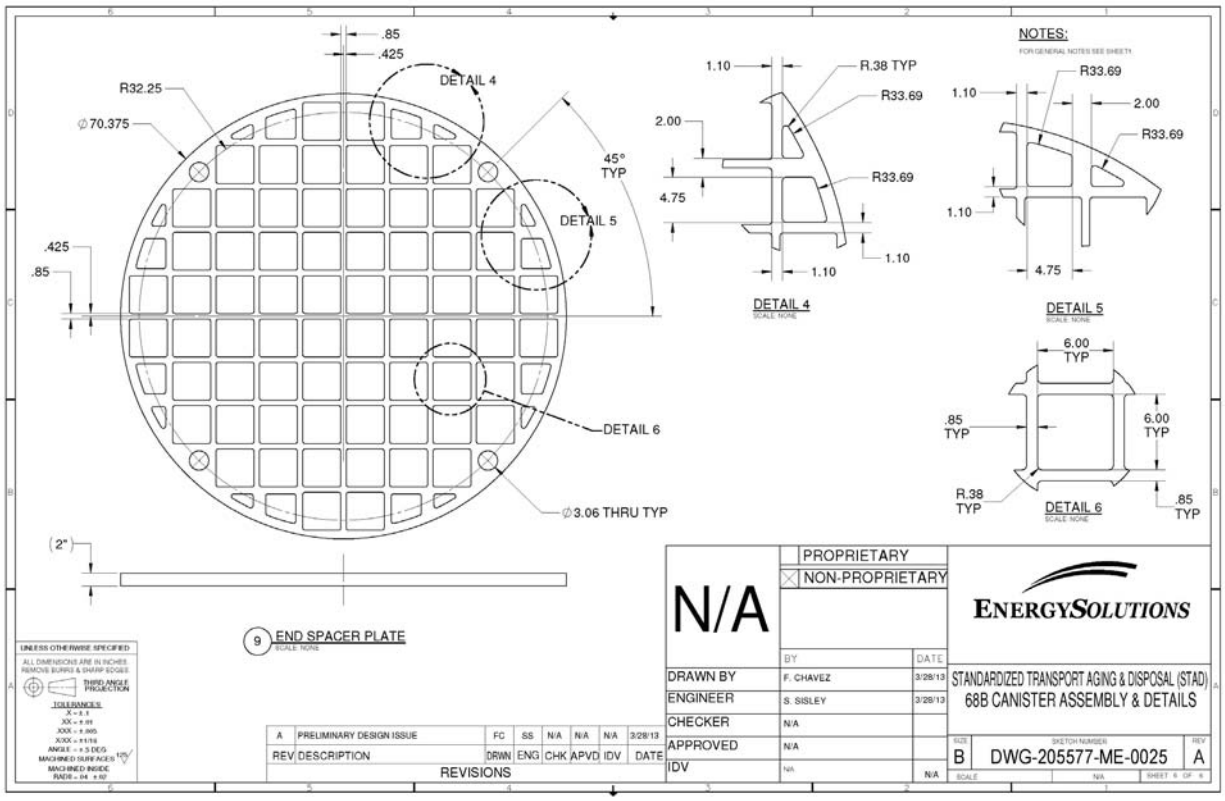

APPENDIX E –Results from Total System Gap Identification

Table E-1. Summary of Existing Gaps for Used Nuclear Fuel Storage and Transportation in the United States

Gap	Description	Management Phase[2]	Reference[3]
Cross-Cutting Gaps (gaps that influence the degradation of more than one system, structure, and a component)			
Burnup Credit	Insufficient data is available to estimate full burnup credit; reduce the bias and bias uncertainty in the isotopic concentration predictions, reactivity worth, and cross sections; and reduce the uncertainty/penalty in the assembly burnup assignment.	II, III	a
Dry Transfer Development	Insufficient data is available to analyze the design of the dry-transfer fuel systems for removing fuel from casks and canisters following extended dry storage.	I	a, b, e
Drying Issues	There is insufficient analysis of the drying mechanisms to quantify the amount of water that remains in a cask after a normal drying process.	I	a, b, c, d, e
Examine Fuel after Storage	There is no established methodology of examining the entire dry cask storage system (DCSS) after storage and methodology to collect data used in evaluating performance models of all the associated systems, structures, and components (SSCs).	I	a, b, e
Fuel Transfer Options	Insufficient data is available to analyze effects of wetting and drying on cladding properties to help determine the pros and cons of the different transfer options (wet or dry) and allow researchers to make informed decisions on the preferred methods for transfer of fuel.	I	a

Gap	Description	Management Phase(2)	Reference(3)
Moderator Exclusion	There is insufficient analysis of the subcriticality during normal conditions of transport and hypothetical accident conditions after a period of storage. In particular, there is a lack of complete understanding of moderator exclusion along with structural integrity of the fuel, baskets, and neutron poisons, combined with a validated full burnup credit methodology.	II	a
Monitoring	There is insufficient monitoring capability, including the lack of field-ready sensors that are adequate with respect to sensitivity, environmental compatibility, physical compatibility, and longevity.	III	a, b, c, e
Stress Profiles	There are insufficient experimental data and detailed calculations to determine the types of stresses (magnitude, frequency, duration, etc.) imparted to various SSCs under various conditions (cask handling, cask drop, seismic events, cask tipover, and normal transportation).	I, II	a, b, e
Thermal Profiles	Insufficient temperature data is available for all SSCs from the time the fuel is loaded into the cask, dried, through the storage period, and during subsequent transportation in order to predict SSC performance and degradation.	I, II, III	a, b, c, e

Gap	Description	Management Phase(2)	Reference(3)
Fuel			
Helium and Fission Gas Release	Computer models that estimate helium and fission gas releases during extended storage and accidents are not verified/complete.	II, III	a, b, c, e
Fission Product Attack on Cladding	There is insufficient analysis of the effects of fission products on pellet-clad interaction and stress corrosion cracking of the cladding.	III	a, b, d
Fragmentation	There is insufficient analysis of the fuel pellet fractures as a result of mechanical force, such as under accident conditions, or from internal pressurization, such as by generation of helium by alpha decay.	II, III	a, b, c, d
Oxidation	There is insufficient analysis of the fuel oxidation after the cladding is breached.	III	a, b, c, d, e
Restructuring/Swelling	There is insufficient analysis of the helium production from alpha decay that may cause the fuel to swell and become a source for stress to cause delayed hydride cracking.	III	a, b, c, e
Cladding			
Annealing of Radiation Damage	There is insufficient analysis of the effects of annealing radiation damage and the temperatures required to achieve sufficient results.	III	a, b, c, d, e
Corrosion-Galvanic and Pitting	There is insufficient analysis of wet corrosion due to water present in the fuel canister.	III	a, b, c, d
Corrosion-Stress Corrosion Cracking	There is insufficient analysis of sources of stress in the cladding, including the impact of pellet swelling.	III	a, c, d, e

Gap	Description	Management Phase(2)	Reference(3)
Creep-High and Low Temperature	There is insufficient analysis of cladding creep due to stresses at high and low temperatures, particularly during long-term storage.	III	a, b, c, d, e
Delayed Hydride Cracking	There is insufficient analysis of delayed hydride cracking due to hydrogen diffusion.	III	a, b, c, d, e
Helium Pressurization	See Helium and Fission Gas Release and Restructuring/Swelling for Fuel.	III	a, b, c, d, e
Hydride Embrittlement and Reorientation	There is insufficient analysis of cladding embrittlement due to zirconium hydrides under different hydride behavior.	III	a, b, c, d, e
Oxidation	There is insufficient analysis of cladding oxidation during dry storage.	III	a, b, c, d, e
Pellet-Cladding Interaction	There is insufficient analysis of degradation of cladding due to pellet-cladding interactions: stress corrosion cracking due to fission product release from the fuel and the mechanical interaction of the pellet with the cladding.	I, II, III	a, b, d, e
Propagation of Existing Flaws	There is insufficient analysis of the propagation of existing flaws over the long term. This particularly applies to high burnup cladding due to little current knowledge of the associated initial flaw size distribution.	III	a, c, e

Gap	Description	Management Phase(2)	Reference(3)
Assembly Hardware			
Corrosion Including Stress Corrosion Cracking	There is insufficient analysis of wet corrosion during the initial period of dry storage and the associated long term corrosion and stress corrosion cracking that may go undetected.	III	a, c, d, e
Metal Fatigue Caused by Temperature Fluctuations	There is insufficient analysis of the temperature fluctuations (e.g., summer to winter) which may result in changes in material properties of assembly hardware. Primarily, the changes in the material properties may affect the safety margin for design basis accidents and transportation hypothetical accident conditions.	III	a, c, d
Baskets			
Corrosion	There is insufficient analysis of the material degradation due to wet corrosion (caused by off-normal conditions or due to inadequate drying at loading phase).	III	a, c, d
Metal Fatigue Caused by Temperature Fluctuations	There is insufficient analysis of the temperature fluctuations (e.g., summer to winter) which may result in degradation of material properties of the basket.	III	a, c, d
Weld Embrittlement	There is insufficient analysis of embrittlement of the weld metal of stainless steel baskets via spinodal decomposition and precipitation.	III	a, c

Gap	Description	Management Phase(2)	Reference(3)
Neutron Poisons			
Corrosion and Blistering	There is insufficient analysis of the corrosion and blistering of non-load-bearing encased cermet materials.	III	a, b, c, d
Creep	There is insufficient analysis of creep of load-bearing structural aluminum-based alloy or metal matrix composite materials.	III	a, b, c
Embrittlement and Cracking	There is insufficient analysis of thermal and radiation embrittlement of non-load-bearing encased cermet neutron poison materials. The stresses and the subsequent cracking could reduce the efficacy of neutron poisons by allowing for neutron streaming.	III	a, c
Metal Fatigue Caused by Temperature Fluctuations	There is insufficient analysis of temperature fluctuations over long term (fluctuation due to extreme weather, summer-winter cycles) and their effect on load-bearing neutron poison materials. This includes the evaluation of the associated structural properties and a response for storage design basis accidents and hypothetical transportation accident conditions.	III	a, c
Thermal Aging Effects	There is insufficient analysis of changes in mechanical properties for neutron poison materials exposed to elevated temperatures, particularly for the case of long-duration elevated temperature exposure.	III	a, c

Gap	Description	Management Phase(2)	Reference(3)
Neutron Shields			
Radiation Embrittlement	There is insufficient analysis of embrittlement of neutron shielding polymer and resin materials due to radiation (primarily neutron) stressors.	III	a, c, d
Thermal Embrittlement, Cracking, Shrinkage, and Decomposition	There is insufficient analysis of embrittlement, cracking, shrinkage, and decomposition of neutron shield materials, especially at higher temperatures.	III	a, c, d
Bolted Cask			
Corrosion of Bolts	There is insufficient analysis of stress corrosion cracking and general, galvanic, pitting, and crevice corrosion, depending on the material and the environment.	III	a, b, c, d
Corrosion of Metal Seals	There is insufficient analysis of stress corrosion cracking and general, galvanic, pitting, and crevice corrosion, depending on the material and the environment.	III	a, b, c, d, e
Microbiologically Influenced Corrosion	See Welded Canister-Microbiologically Influenced Corrosion (same).	III	a, c, d
Thermomechanical Degradation of Bolts	There is insufficient analysis of thermomechanical degradation of bolts via creep and thermal fatigue, particularly over longer periods of time.	III	a, b, c, d
Thermomechanical Degradation of Seals	There is insufficient analysis of thermomechanical degradation of seals via creep, thermal fatigue, and, at lower temperatures, loss of ductility of seals.	III	a, b, c, d, e

Gap	Description	Management Phase(2)	Reference(3)
Welded Canister			
Aqueous Corrosion	There is insufficient analysis of the corrosion due to bulk water present at the metal canister surface.	III	a, b
Atmospheric Corrosion	There is insufficient analysis of the corrosion due to bulk water present at the metal canister surface due to sorption of water vapor from the air.	III	a, b, c, d, e
Microbiologically Influenced Corrosion	There is insufficient analysis of microbiologically influenced corrosion where sufficient water and nutrients are present to support microbial growth.	III	a, c, d
Concrete Structures			
Carbonation	There is insufficient analysis of carbonation that occurs as CO_2 from the air dissolves into water and reacts with the calcium hydroxide in the concrete, producing calcium carbonate. This process reduces the pH and can lead to the loss of passivation of the reinforcing steel, especially if the steel is not epoxy-coated.	III	a, b, c
Corrosion of Embedded Steel	There is insufficient analysis of corrosion of embedded steel by alteration of the alkaline environment due to leaching of calcium hydroxide, carbonation, or an acid attack.	III	a, b, c, d
Coupled Mechanisms	There is insufficient analysis of concrete degradation due to coupled mechanisms (thermal, hydrodynamic, mechanical, chemical, and radiation processes).	III	a, c

Gap	Description	Management Phase(2)	Reference(3)
Freeze-Thaw	There is insufficient analysis of the freeze-thaw process that occurs when water within the pores of the concrete freezes, creating expansive stresses.	III	a, b, c, d, e
Thermal Degradation of Mechanical Properties, Dry-out	At elevated temperatures there is insufficient analysis of potential loss of pore water from within the concrete, followed by dehydration of chemically bound water-this dehydration causes weakening of the bond between the gel and cement phases within the concrete, resulting in lower strength.	III	a, b, c, d, e

Notes:

1) The information in the table is based on analysis performed in report FCRD-USED-2012-000215/PNNL-21596 (Reference a), which incorporates the gaps from other reports in References b-e. Some of the gaps identified in References b-e are not explicitly listed in Table E-1 due to the overlap with other gaps or due to their insignificance.

2) The management phases are:

   I. Utility and Stranded Site Loading and Consolidated Storage Facility Repackaging Operations
   II. Transportation
   III. Interim and Long Term Storage

3) The references used are:

   a. U.S. Department of Energy, Review of Used Nuclear Fuel Storage and Transportation Technical Gap Analyses, July, 2012, FCRD-USED-2012-000215/PNNL-21596.
   b. U.S. Nuclear Waste Technical Review Board, Evaluation of the Technical Basis for Extended Dry Storage and Transportation of Used Nuclear Fuel, 2010.
   c. U.S Nuclear Regulatory Commission, Identification and Prioritization of the Technical Information Needs Affecting Potential Regulation of Extended Storage and Transportation of Spent Nuclear Fuel, 2012.
   d. Electric Power Research Institute, Extended Storage Collaboration Program (ESCP) Progress Report and Review of Gap Analyses, August 2011, TR1022914.
   e. International Atomic Energy Agency, Long Term Storage of Spent Nuclear Fuel - Survey and Recommendations, May 2002, IAEA-TECDOC-1293.

Table E-2. UNF Disposal Total System Gap Identification (by Management Phase)

Management Phase └ Activity	GAP (E) = Equipment; (H) = Hardware; (P) = Process; (M) = Miscellaneous
Utility & Stranded Site Loading	
└ Transfer from Storage Casks to Transport Casks @ Shutdown Sites	1. Lack of ancillary equipment such as cranes, transfer towers & shield balls (E) 2. Lack of staging space for rail cars & transport casks with skids (M)
└ Loading Bare Fuel Transport casks at operating utilities	1. Lack of large, bare fuel transport casks (H) 2. Potential Lack of utility crane capacity (E) 3. Lack of equipment such as 4-head welding machine for parallel smaller STAD or can-in-can loading (E)
└ Loading STAD canisters at shutdown / stranded utility sites	1. Lack of multiple STAD canister designs for different fuel assembly dimensions and damaged fuel (H) 2. Lack of contracting agreements with utilities for stranded sites (P)
Transportation	
└From Shutdown Utilities	1. Lack of rail cars that meet AAR-S-2043 performance & monitoring requirements (E) 2. Lack of railroad selected or NRC approved route plans, or security plans (P)
└From all Utility Sites	1. Lack of procedures and handling methods for STAD canisters in accident scenarios during shipment from utility sites (P)
CSF Repackaging & Interim Storage	
└ Loading of can-in-can concepts for multiple assembly sizes, GTCC, secondary wastes	1. Lack of procedures for loading multiple assemblies or waste types into can-in-can STAD canisters (P)
└ Rod consolidation and transfer from DPC to STAD canisters	1. Lack of procedures (P) and equipment (E) for rod consolidation at the CSF 2. Lack of procedures for transfer from DPCs to STAD canisters and regulation change confirmation by NRC (P)
└ Empty DPC Recycling or Disposal regulations	1. Lack of waste type classification for an empty DPC, associated waste quantity, and identification of a suitable disposal facility (M)
└ Procedures for offloading – repackaging from DPCs to STAD canisters	1. Lack of procedures for offloading and repackaging DPCs to STAD canisters (P) 2. Lack of large scale handling and repackaging procedures (P)
└ Interim Storage of high / low burnup assemblies	1. Degradation effects on old, low burnup assemblies due to storage with high burnup assemblies (M)
Repository Receipt & Long Term Storage	
└ New handling equipment for larger STAD canister sizes	1. Lack of equipment for handling larger STAD canister sizes (E) 2. Lack of procedures for handling larger STAD canister sizes (P)
└ Can-in-can STAD canister disposal	1. Lack of thermal analysis for repository specific heat load limits for burnup and cooling time (M) 2. Evaluation of MOX fuel for can-in-can design concepts (M)
└ Settlement of larger DPCs or STAD canisters	1. Lack of data for settlement of larger and heavier DPCs and STAD canisters in salt or other different geologic media (M)
└ Effect of Helium Gas release	1. Lack of data for helium gas released into salt (M)

NOTE: GAP's already identified in various studies are included in Table E-1 and not included above.