DOE Advisory and Assistance Services Contract

Task Order 17: Spent Nuclear Fuel Transportation Cask Design Study

UPDATED FINAL REPORT

April 22, 2015

Prepared by

Revision History

Revision	Date	Reason for Revision	Originator
Preliminary	December 15, 2014	Preliminary Report for DOE Review	I Thomas
Draft	February 23, 2015	Draft Final Report for DOE Review	I Thomas
Final	March 25, 2015	Final Report – submitted to DOE	I Thomas
Updated Final	April 22, 2015	Updated Final Report to address some minor inconsistencies.	I Thomas

DISCLAIMER

This information was prepared as an account of work sponsored by an agency of the U.S. Government. Neither the U.S. Government nor any agency thereof, nor any of their employees, makes any warranty, expressed or implied, or assumes any legal liability or responsibility for the accuracy, completeness, or usefulness, of any information, apparatus, product, or process disclosed, or represents that its use would not infringe privately owned rights. References herein to any specific commercial product, process, or service by trade name, trade mark, manufacturer, or otherwise, does not necessarily constitute or imply its endorsement, recommendation, or favoring by the U.S. Government or any agency thereof. The views and opinions of authors

Executive Summary

Per the requirements of the Task Order 17: *Spent Nuclear Fuel Transportation Cask Design Study*, statement of work (SOW), Energy*Solutions* and its team partners: NAC International, Talisman International, Booz Allen Hamilton and Exelon Nuclear Partners, hereafter referred to as "the Team", is providing a final report for U.S. Department of Energy (DOE) review, which documents the cask concepts developed under this study and the results of supporting analysis work.

The base cask concept is a 125-ton (maximum), single lid cask designed to accommodate an overall fuel assembly heat generation level of up to 24 kW. Pressurized Water Reactor (PWR) and Boiling Water Reactor (BWR) designs have two fuel basket capacities each, which are 32 bare PWR assemblies (32-PWR) or 28 PWR assemblies in Damaged Fuel Cans (DFCs) (28-PWR), and 68 bare BWR assemblies (68-BWR) or 61 BWR (61-BWR) assemblies in DFCs, respectively. All of the DFC designs have slightly lower capacity, since the DFCs are larger than bare fuel assemblies and require lower-capacity baskets that have larger cell openings. The PWR and BWR bare fuel designs are also able to accommodate combinations of 8 PWR assemblies in DFCs and 24 bare PWR assemblies, and 8 BWR assemblies in DFCs and 60 bare BWR assemblies, respectively. For high burn-up, shorter cooled spent nuclear fuel (SNF), the numbers of fuel assemblies is more restricted. Assuming that there is no other fuel in the basket, up to twelve (12) 62.5 GWd/MT PWR assemblies with out-of-reactor cooling time of 5 years can be transported in either the 32-PWR or 28-PWR designs. The 68-BWR, depending on assembly uranium loading and enrichment, can transport up to thirty-two (32) 62.5 GWd/MT BWR assemblies with out-of-reactor cooling times of 5 years. The 61-BWR, again depending on assembly uranium loading and enrichment, can transport up to twenty-nine (29) 62.5 GWd/MT BWR assemblies with out-of-reactor cooling times of 5 years.

SYSTEMS ENGINEERING APPROACH

The team has followed the multi-phase systems engineering approach shown in Figure ES-1.

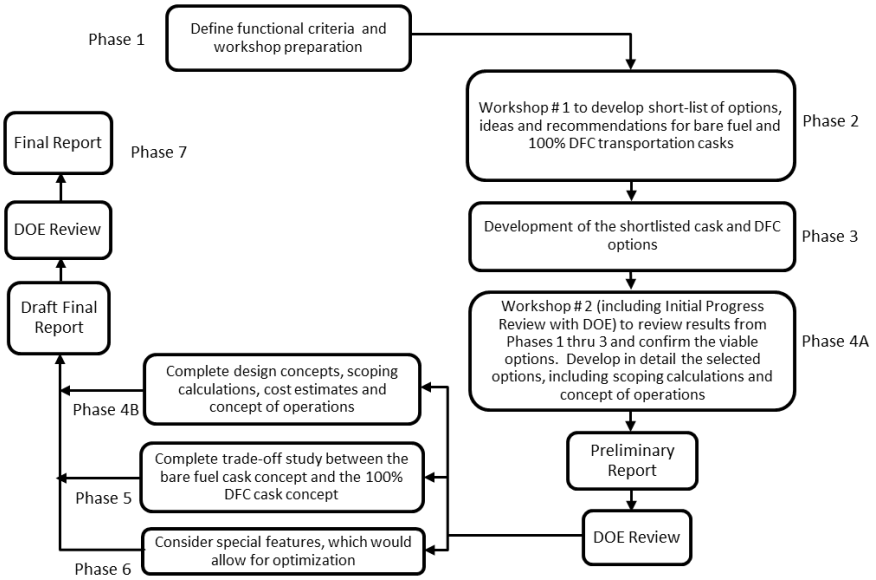

Figure ES-1. Task Order 17 Systems Engineering Approach.

The above approach is described in Section 3.0 and the results achieved are summarized below.

In arriving at the design concepts presented in this report, the Team and the DOE agreed on the following key design inputs and guidance:

- **Crane Capacity** – It was agreed that a conceptual design for a 125 ton cask will be produced and the impacts associated with a 100 ton cask identified. The basis for this decision was that >75% of the operating plants will be able to handle a 125 ton cask using their spent fuel pool cranes.

- **Spent Nuclear Fuel (SNF) Length** – It was agreed that for the purposes of the Task Order 17 study, the cask concepts shall be able to accommodate SNF assemblies with an assumed post-irradiation fuel assembly length of up to 180 inches without non-fuel components (NFCs). In addition, it was proposed that the cask concepts be capable of accommodating shorter length fuel assemblies containing NFCs which do not require special handling, provided the total post irradiation length (assembly with NFC) does not exceed 180 inches. The South Texas Project fuel assemblies and the AP1000 fuel assemblies for Vogtle 3 and 4 and VC Summer 2 and 3 are excluded from this study on the basis that their fuel length is greater than 180″.

- **Criticality Analysis Assumptions and Approaches –** DOE provided guidance for addressing bare fuel, DFCs, and hybrid (undamaged high burnup fuel not in DFCs (bare) mixed with truly damaged fuel in DFCs), which is provided in Table 3-1 and Table 3-2.

Utilizing the above design inputs and guidance, the results of two facilitated workshops (September 23-25, 2014, and October 28-29, 2014) involving representatives from each of the team partners, and the results from design and engineering analyses, including thermal, structural, criticality and shielding, designs have been developed for a set of cask concepts, described in detail in Section 4.0, capable of accommodating each of the types of payloads below:

- 32 PWR bare fuel assemblies
- 28 PWR DFC assemblies
- 68 BWR bare fuel assemblies
- 61 BWR DFC assemblies
- DFC cells mixed in with PWR or BWR bare fuel assemblies

The cask concepts designed to accommodate these payloads are all designed with a 182″ cavity length (excluding a 2″ spacer plate) to take the fuel length defined above (i.e. up to 180″ post-irradiation length) and are generally referred to as "long"[1]. An item of interest that arose from the Initial Progress review meeting, which took place on October 28, 2014, and was effectively an integral part of the second workshop, was for the Team to consider the benefits of a cask shorter than the "long" cask, which is referred to as a "short" cask. In response, the team identified an option for a shorter cask, which would have a cavity length of 174 ″ versus the

[1] Regarding cask length, the terms long and regular are used interchangeably throughout the document.

182 inch cavity length for the long casks. It is important to note that the "long" cask is the main subject of this report and the details for the "short" cask are provided for information only.

Assembly hardware with significant activation must not be present in the top two inches of the cask cavity, as that region lies above the top of the radial lead shield (and unacceptable gamma streaming over the top of the lead shield would result). The tops of inserted control rod assemblies (CRAs) (which are not exposed to significant neutron fluence during reactor operation) and DFC top hardware may extend into the top two inches of the cask cavity. Thus, with the exception of assemblies containing CRAs, assemblies loaded into the "long" and "short" casks must not exceed 180 inches and 172 inches in length, respectively, after accounting for assembly thermal and irradiation growth. A margin of approximately 1.5 inches is enough to conservatively account for the effects of assembly thermal and irradiation growth, so the casks can accommodate nominal, pre-irradiation assembly lengths (including any inserted control components) of 178.5 and 170.5 inches, for the "long" and "short" casks, respectively.

A full discussion on what types of fuel can be accepted by the "long" and the "short" cask is provided in Section 4.2 and a summary is provided in Table ES-1.

Table ES-1. Fuel Inventory Accommodated by Long and Short Casks

	Transportation Cask Type	
Parameter	Long	Short
Cask Internal Cavity Length	182″	174″
Maximum pre-irradiation fuel assembly length (including any inserted control components)	178.5″(1)	170.5″(2)(3)
Fuel types that could be loaded. (Note. Fuel length design input excludes South Texas Project and AP1000)	• All US PWR fuel with the exception of CE 16×16 fuel with control components.(4) • All US BWR fuel.	• All US PWR fuel, with the exception of CE 16×16 fuel; with or without inserted control components. • Most BWR fuels can't be loaded.

Notes:

1. The 178.5″ dimension is governed by the Combustion Engineering (CE) 16×16 System 80 fuel assembly without control components, which has a nominal length of 178.3 inches.
2. The 170.5″ dimension is governed by the B&W 15×15 assembly with an inserted control rod assembly.
3. B&W 15×15 assemblies with inserted CRAs are longer than 170.5 inches but are shorter than 172.5 inches. Thus, they will fit into the "short" cask cavity, but the head of the CRA will extend into the top two inches of the cavity. This is acceptable since CRA heads do not have significant activation. The only potential issue is that a B&W 15×15 assembly with a CRA insert will be too long to place inside a DFC. Thus, if a B&W 15×15 fuel assembly is damaged, any CRA inserts must be removed before placing the assembly in a DFC. (If using the "long" cask, a B&W 15×15 assembly with a CRA insert may be placed into a DFC). B&W 15×15 assemblies with any other type of control insert are less than 170 inches long, and can therefore be loaded into the "short" cask (even if they are placed within a DFC).
4. A full payload of PWR assemblies with an overall weight in excess of 1500 lbs per assembly (e.g., B & W assemblies or W 15×15 and W 17×17 assemblies with inserted control components) will require a plant spent fuel pool crane capacity of more than 125 tons.

DESIGN CONCEPTS

The cask concept features a common transportation cask body and impact limiters, which, via four different types of internal baskets located within a cavity (70″ diameter, 182″ long) in the

cask, directly accepts intact fuel assemblies (32 PWR or 68 BWR) or damaged fuel assemblies inside DFCs (28 PWR or 61 BWR). The cask is a single lid design. The dimensions of the internal cask cavity are selected to accommodate the entire United States PWR and BWR assembly inventory (with the exception of South Texas and AP1000 PWR assemblies), and to maximize cask payload capacity while ensuring acceptable cask exterior dose rates without requiring unacceptably long assembly cooling times. The cask system is designed to accommodate any PWR or BWR fuel assembly payload that has an overall heat generation level of 24 kW or less. The overall envelope of the package (including the 128 inch diameter of the impact limiters) meets standard Association of American Railroads requirements.

An overview of the transportation cask with impact limiters fitted is shown in Figure ES-2.

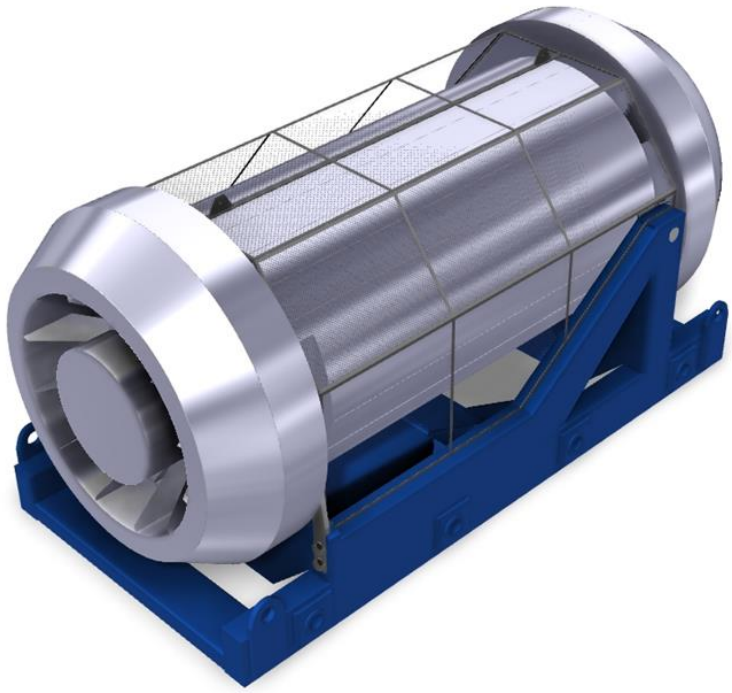

Figure ES-2. Overview of the Transportation Cask (Impact Limiters Fitted).

The materials, geometry, and construction of the transportation cask are typical of that implemented in the spent fuel transportation industry today. With the exception of the neutron shield design, the transportation cask design resembles that of the NAC MAGNATRAN Package. The inner shell of the cask body is SA-240 Type 304 stainless steel. The bottom plate can be made of SA-240 Type 304 or SA-336 Type F304 stainless steel and the upper and lower forgings manufactured from SA-336 Type 304 stainless steel. The lid is made from SA-564 Type 630 (17-4PH) stainless steel, while the cask body's outer shell is manufactured from SA-240 Type XM-19 stainless steel. Lead and NS-4-FR (epoxy resin that contains boron) are used to provide gamma and neutron shielding, respectively. To aid heat dissipation, copper heat fins are attached to the outer shell surface and pass through the neutron shield material terminating at the neutron shield shell.

The transportation cask has a target "under-the-hook" weight of 125 Tons (250,000 lbs) when loaded with the internals and fuel. In an effort to maximize the shielding for the transportation cask, it has been determined that the loading operation will include the removal of internal water prior to lifting the cask from the pool. This is an accepted operation at several sites and imposes no additional occupational dose to implement. As such, the maximum cask body weight is restricted to 177,000 lbs based on a content (basket/fuel) weight restriction of 73,000 lbs. The current cask body, lid, spacer and lifting beam weight, for those materials described above, is just at the 177,000 lb limit. Further optimization with shielding and contents, as well as finer modeling in solids, can provide additional margin. Figure ES-3 provides a cross section view of the transportation cask.

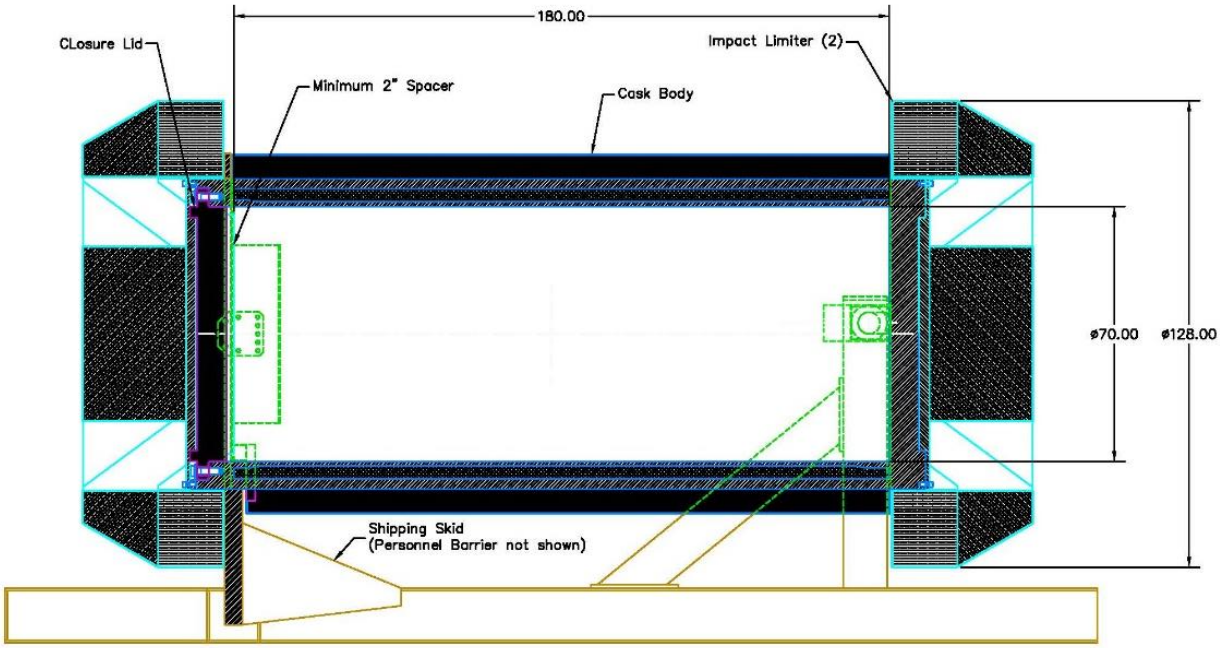

Figure ES-3. Cross-Section View of the Transportation Cask

Four internal basket structures have been designed and evaluated for this report. For each fuel type (PWR and BWR), two basket designs are developed, one that accommodates intact bare fuel assemblies (32-PWR, 68-PWR), and one that accommodates fuel assemblies that have been placed into DFCs (28-PWR, 61-BWR) and which may be considered damaged.

Since the damaged fuel cans are larger than bare assemblies, they require lower-capacity baskets that have larger cell openings. The bare fuel baskets actually can accommodate a small number of DFCs (containing damaged fuel assemblies) in the somewhat larger cell openings that exist around the basket perimeter. The 32-PWR could accommodate eight DFCs in the "corner" cells on the basket periphery and the 68-BWR could accommodate eight DFCs around the basket edge. The damaged fuel baskets can accommodate a DFC in every cell opening. The primary reason for evaluating baskets that can accommodate DFCs in all cell openings is to support DOE evaluations on the system impacts of pre-packaging fuel into DFCs prior to transport.

All four baskets fit inside a 70-inch diameter cask cavity. Perspective views for each of the four basket types are shown in Figure ES-4.

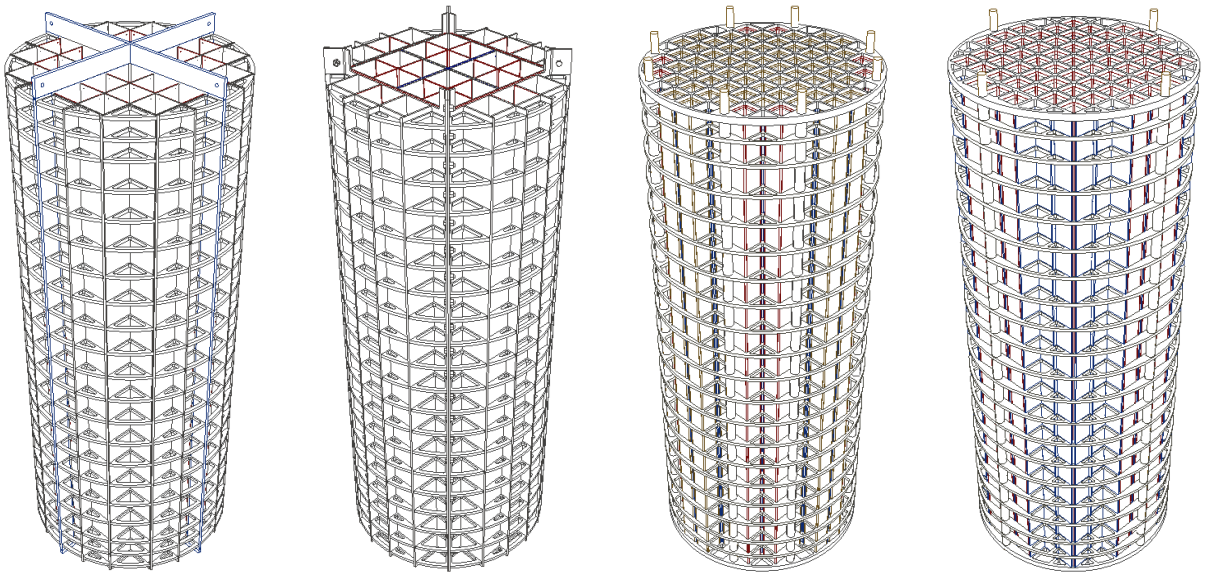

Figure ES-4. Perspective Views (from left to right) for 32-PWR, 28-PWR, 68-BWR and 61-BWR Fuel Assembly Baskets

Lifting and handling of the transportation cask is accomplished with an industry standard type lift yoke. The lift yoke consists of a beam weldment which would be designed to be compatible with multiple crane hooks through the use of sleeves and bushings. The lift arms are closed palm, keyhole type, and interface with the transportation cask removable trunnions to lift and rotate the transportation cask package both in and out of the pool as well as placement and transition onto and off of a transportation skid.

The design concepts for the transportation cask and the cask internal baskets are described in detail in Section 4.0, and Appendices D and E provide drawings for the transportation cask and the cask internal baskets, respectively.

A description of the design concept for the DFC is provided in Section 4.1.3.

A summary of the key data for the four variants of the transportation cask are shown in Table ES-2.

Table ES-2. Summary of Key Data for the Task Order 17 Transportation Cask Design Concepts

DATA TYPE	Notes	Cask Capacity - Fuel Assemblies			
		32-PWR	28-PWR (DFC)	68-BWR	61-BWR (DFC)
Name		Task Order 17, Spent Nuclear Fuel Transportation Cask			
Fabricator		N/A			
Design/operation life		Assumed 40 year operating life for cost estimating			
Mode		Transport Only			
Total Assembly Capacity		32	28	68	61
Proposed Certificate of Compliance Limits					
Total Thermal Limit (kW)		24	24	24	24
Thermal Limit per cell (kW)		2	2	0.85	0.85
Drying procedures (vacuum, FHD, other)		Vacuum			
Criticality Methodology (Burnup credit/ Boron credit etc)		BUC	BUC	Fresh Fuel	Fresh Fuel
Criticality Loading Curve (Burnup credit)		MAGNATRAN	MAGNATRAN	N/A	N/A
Boron loading Requirement in ppm (if applicable)		None	None	None	None
Max enrichment (Criticality)	Varies with BU for PWR	5.00%	5.00%	5.00%	5.00%
Min enrichment (Shielding)	Varies with BU	varies	varies	varies	varies
Min Cooling Time (Shielding/Thermal)	Varies with BU	5 yr	5 yr	5 yr	5 yr
Max Burnup (Shielding/Thermal), (GWd/MTU)		62.5	62.5	62.5	62.5
Min Burnup (Criticality)	Varies with enrichment	varies	varies	0	0
High burnup fuel storage/transportation method (if any - i.e., DFC, N/A)		maybe DFC	maybe DFC	maybe DFC	maybe DFC
Transportation shielding loading curve (if any)	See Note 1, Below	See notes	See notes	See notes	See notes
Non-fuel hardware loading allowed (yes/no)	CE 16 x 16 fuel cannot be loaded with most control inserts	yes	yes	yes	yes
Restricted Fuel Class/Type (if any)		South Texas/AP1000			
Physical characteristics of DFC					
Outer length (cm)	457.84 internal cavity	459.74	459.74	459.74	459.74
Outer width (cm)		22.78	22.78	15.16	15.16
Wall Thickness (cm)		0.15 to 0.31	0.15 to 0.31	0.15 to 0.31	0.15 to 0.31
Physical Properties					
Length w/o impact limiters (cm)	Long cask values	513.08	513.08	513.08	513.08
Length w/ impact limiters (cm)	Long cask values	662.94	662.94	662.94	662.94
Diameter w/o impact limiters (cm)	Long cask values	252.86	252.86	252.86	252.86
Diameter w/ impact limiters (cm)	Long cask values	325.12	325.12	325.12	325.12
Cavity length (cm)	Long cask values	462.28	462.28	462.28	462.28
Cavity diameter (cm)	Long cask values	177.8	177.8	177.8	177.8
Top lid thickness including neutron shield (cm)	See Note 2	25.4	25.4	25.4	25.4
Top neutron shield thickness (cm)		None	None	None	None
Bottom thickness including neutron shield (cm)	See Note 2	25.4	25.4	25.4	25.4
Bottom neutron shield thickness(cm)		None	None	None	None
Wall thickness including neutron shield (cm)		37.45	37.45	37.45	37.45
Neutron shield side thickness (cm)		17.78	17.78	17.78	17.78
Neutron shield type	Epoxy resin	NS-F-FR	NS-F-FR	NS-F-FR	NS-F-FR
Basket cell dimensions (cm) - Minimum	Long cask values	22.54	23.37	14.86	15.75
Empty Weight w/o impact limiters (lbs) (cask body + lid + basket)	Long cask values	186,755	193,555	187,055	186,855
Empty Weight w/ impact limiters (lbs)	Long cask values	205,755	212,555	206,055	205,855
Loaded Weight w/o impact limiters (lbs) (not including yoke)	Long cask values	235,835	239,335	235,743	235,121
Loaded Weight w/ impact limiters (lbs)	Long cask values	254,835	258,335	254,743	254,121
Basket material	Carbon steel. BWR is stainless steel guide tubes, w/ carbon steel spacer plates	SA-537	SA-537	SA-537	SA-537
Neutron poison material		Borated Aluminum			
Flux Trap (yes/no)		No	No	No	No
Overweight Truck (yes/no)		No	No	No	No

Note 1: Fuel heat generation may not exceed 1.8 kW/MTU in the PWR basket periphery cells, or 2.0 kW/MTU in the BWR basket periphery cells

Note 2: The top lid and bottom plate are both 10" thick, but each have a 2" recess in the middle. The impact limiter design is such that it fills the recess in the lid bottom plate and provides an additional 1" of shielding. Thus, when the impact limiter is installed, the total end steel shielding is 11".

Table ES-2. Summary of Key Data for the Task Order 17 Transportation Cask Design Concepts (continued)

DATA TYPE	Notes	Cask Capacity - Fuel Assemblies			
		32-PWR	28-PWR (DFC)	68-BWR	61-BWR (DFC)
Unit Processing Times and Corresponding Dose	Time (hr)		Dose (mrem)		
Cask Loading for Transportation	Refer to Table 5-2		Refer to Table 5-2		
Cask Receipt and Processing	Refer to table 5-3		Refer to Table 5-3		
Unit Costs (per cask) (in 2015 $)					
	Unit Cost ($)	Contingency @ 20% Equipment or 30% other ($)			Total Cost ($)
Cask Purchase					
Cask Purchase (initial) (Long 182" Cask, PWR, 32 Intact (upt to 8 DFCs)) - (Unit = one cask system)	7,211,736	1,442,347			8,654,083
Cask Purchase (Full-up Production) (Long 182" Cask, PWR, 32 Intact (upt to 8 DFCs)) - (Unit = one cask system)	5,769,389	1,153,878			6,923,267
Ancillary Equipment - Loading	655,703	131,141			786,843
Loading operation					
Mobilization (per campaign)	297,098	86,129			386,227
Loading (per cask)	86,156	34,463			120,619
De-Mobilization	258,590	77,577			336,167
Ancillary Equipment - Unloading	562,194	112,439			674,633
Unloading operation					
Mobilization (per campaign)	228,777	68,633			297,411
Unloading (per cask)	66,344	19,903			86,247
De-Mobilization	199,125	59,737			258,862
Inspection (per campaign)	24,000	7,200			31,200
Maintenance (per campaign)	65,000	19,500			84,500
Refurbishment	14,000	4,200			18,200

DESIGN AND ANALYSIS APPROACH

Structural (Section 4.3.1), Thermal (Section 4.3.2), Shielding (Section 4.3.3), and Criticality (Section 4.3.4) analyses have been completed for the transportation cask design concepts.

- Structural analyses have been performed for the cask body and the fuel baskets to demonstrate that the basket assemblies are capable of satisfying the applicable structural design criteria when subjected to the most severe transportation design loading.

- The thermal analyses performed for the cask concluded that the cask performs as expected with the general heat flux limitations available at this time. During final design and analysis, which may be performed to support a licensing application, it is expected that the basket designs will be shown to provide better axial distribution than that used in the models (i.e., tube and disk) allowing slightly better thermal performance by developing a more uniform or stretching of the thermal gradients for greater distribution.

- The results of the thermal analyses show that the assembly peak cladding temperatures remain below the 400°C limit for all four basket designs. The basket structural steel remains under the ASME code limit of 700°F for all basket designs. The peak borated aluminum temperatures are under 650°F for all four basket designs. These temperatures are not considered a concern, as no structural credit is taken for the borated aluminum material. The analyses also show that for all four basket designs, the cladding and basket material temperature limits are not exceeded even if the maximum allowable overall heat

generation level of 24 kW is concentrated within 12 PWR assemblies that have the maximum allowable individual assembly heat generation level of 2.0 kW, or 28 BWR assemblies that have the maximum allowable individual assembly heat generation level of 0.85 kW, where those assemblies are concentrated in the basket center cells (i.e., are placed in the worst possible basket locations).

- The results of the shielding analyses performed on the design concepts have concluded that for any uniform SNF assembly payload that has an overall heat generation level under 24 kW, the dose rates will meet the 10 CFR 71 requirements with respect to shielding. It was noted during the analyses that the potential exists for gamma streaming through some shielding penetrations. This is discussed in Section 4.3.3.6 and several minor changes to the cask design are identified to address these potential issues, which would be made during the formal cask design and licensing process.
- The conclusions from the PWR and BWR criticality analyses are documented in Sections 4.3.4.1 and 4.3.4.2, respectively and, as expected, are dependent on the state of the fuel that is assumed for the analysis, (i.e. intact, partially reconfigured, fully reconfigured or a combination such as a bare fuel cask that contains both DFCs and bare fuel). For the 32-PWR, 28-PWR, 68-BWR, and 61-BWR baskets, several different configurations have been modeled, which reflect various licensing contingencies. The evaluations of these alternative cases allow the impacts on system performance to be understood for various licensing contingencies (concerning how high burnup and/or damaged fuel are treated, for example).

CONCEPT OF OPERATIONS

Section 5.1 provides a detailed outline of the operating procedures and tests, based on industry standard practices, which are performed to ensure proper function of the transportation cask during transport operations. The procedures are written for direct loading or unloading in a spent fuel pool and represent the minimum generic requirements for loading, unloading, preparation for transport, and for inspection and testing of the transportation cask. Each cask user will need to develop, prepare, and approve site-specific procedures to assure that cask handling and shipping activities are performed in accordance with the package's Certificate of Compliance and any applicable Nuclear Regulatory Commission and Department of Transportation regulations governing the packaging and transport of radioactive materials.

Section 5.2 provides a time and motion assessment that is based on Exelon's bare fuel cask experience, and it is recommended that, at the appropriate time, a program be established to adopt an operational approach to load / unload bare fuel utilizing a template similar to the steps currently in use at sites such as Peach Bottom Atomic Power Station which currently loads bare fuel transportation casks, e.g. TN-68. The time and motion information presented in Table 5-2 and Table 5-3 reflect the loading/unloading approach used by Exelon, noting that the loading/unloading steps shown are global in nature and may not reflect actual UNF handling and storage operations at individual reactor sites. The information also includes the minimum number of people that have to be trained and qualified for loading and unloading operations at the site. These numbers are taken from the typical crew sizes used at plant sites for loading and unloading. It is understood that unloading operations at an Interim Storage Facility may require much larger crews since the site potentially will receive fuel from multiple sites each week.

From preparation of the empty transportation cask to placement of the loaded cask at the rail car loading area, the estimated duration is 78 hours. From preparation of the received loaded transportation cask to the empty cask placed on the fuel building floor, the estimated duration is 50 hours.

Section 5.3 provides the anticipated worker dose estimates, which are based on worker dose experience using existing cask systems. Process worker loading doses seen with existing systems have been adjusted based on any significant differences in cask exterior dose rates, between the design concepts and the existing systems.

Section 5.4 discusses operational efficiencies and comparisons with current practice and experience. The designs developed by the Team for the bare fuel and DFC transportation casks offer equivalent technologies to those currently used by the nuclear power plants. Based on the dry storage cask experiences of Exelon, the following items have been identified as opportunities to achieve optimum operational efficiencies:

- Optimization of vacuum drying

  Vacuum drying is often time-consuming, labor intensive and difficult to consistently predict for duration to complete. It is possible to utilize automation to more consistently perform and complete this operation, while reducing overall dose to operators.

  Changes in canister processing at Catawba Station from the NAC-UMS® to the MAGNASTOR® system warranted new technologies to maximize efficiency and minimize personnel exposure. EMS Solutions, Inc. supplied the E1000LT Vacuum Drying Skid (VDS), which performs all ancillary activities from weld hydrostatic testing to helium backfill from a single location.

- Resource Utilization

  Resource utilization to allow continuous 24/7 work to complete the greatest number of loadings/unloadings in the shortest time is an area that merits further review. An examination of the resource utilization plans for sites which have completed large-scale loadings could provide valuable information. Zion Station, for example, has loaded 1800 PWR assemblies to MAGNASTOR Overpacks in eleven (11) months using 4 plus crews working 24/7 including holidays.

Section 6 provides comprehensive details of the cask maintenance requirements. It also includes in Section 6.3, lessons learned and experience from the United Kingdom (UK) Sellafield Site's maintenance of a fleet of bare fuel casks.

USABILITY

The proposed baskets can accommodate the entire US spent PWR and BWR fuel inventory, with the exception of South Texas fuel and CE 16×16 fuel with control components (whose length exceeds that of the cask cavity). Some future assembly types, including AP1000 fuel, will also be too long for the proposed cask and basket design. For these types of fuel, details are provided in Section 13 regarding designing a longer version of the proposed cask and basket designs, which could be used with a 150 ton plant crane.

The proposed cask systems can accommodate any fuel assembly payload that has an overall heat generation level of 24 kW or less, with allowable fuel burnup levels up to 62.5 GWd/MTU.

With respect to criticality, the system will be able to accommodate the entire US spent fuel inventory, the only qualification being that a slight reduction in payload capacity may be required for a very small fraction of shipments.

The cask systems will be able to accommodate all partial fuel assemblies (i.e., intact assemblies with one or more fuel rods missing), although such assemblies may have to be placed into basket periphery cells. It is expected that the proposed cask system will be able to accommodate mixed-oxide (MOX) fuel assemblies and stainless steel clad fuel assemblies, though some additional analyses may be necessary depending on their characteristics.

The primary proposed cask and basket designs, described in Section 4.1, will require a plant spent fuel pool crane capacity of 125 tons. Most US nuclear plant sites have a crane capacity of 125 tons or more. Some sites, however, have crane capacities between 100 and 125 tons. A smaller cask system that could be used with a 100 ton plant crane is discussed in Section 12.

Two cask cavity length options have been designed. The longer cavity length cask can accommodate all US PWR and BWR assembly types, with or without inserted control components, with the exceptions discussed in the first paragraph above. However, if a full payload of PWR assemblies that have a total weight (including any inserted control components) in excess of 1,500 pounds each is loaded into the long-cavity cask, the required plant spent fuel pool crane capacity will exceed 125 tons. B&W 15×15 and B&W 17×17 assemblies, as well as W 15×15 and W 17×17 assemblies with control components, weigh more than 1,500 lbs each. A crane capacity of 125 tons is sufficient to accommodate full payloads of all US BWR assembly types, with or without flow channels, in the long-cavity cask. The short-cavity length cask can accommodate full payloads of PWR assemblies with weights up to 1,725 lbs each (which is bounding for all US PWR assembly types), without requiring a pool crane capacity in excess of 125 tons. However, the shorter-cavity cask cannot accommodate longer PWR assembly types such as CE 16×16. CE 16×16 assemblies weigh less than 1,500 lbs each, and can therefore be accommodated by the long-cavity cask.

Evaluations of potential loading scenarios are presented in Section 8.1. The first evaluation verifies that the proposed cask systems will be able to take fuel from operating plants as necessary to assure full core offload capability (without the plant having to resort to additional on-site dry storage). The second evaluation determines the number of years after plant shutdown that would be required to fully unload a shutdown plant's spent fuel pool, using the proposed cask systems.

REGULATORY COMPLIANCE

Section 9.0 provides a detailed assessment of the "licensability" of the transportation cask design concepts presented in this report, i.e. their ability to be approved and certified by the NRC. The conclusion of this assessment is that NRC approval of the SNF transportation cask design would be anticipated.

The applicant for the SNF transportation cask designs developed by the Team under Task Order 17 should anticipate a detailed NRC review involving multiple technical disciplines requiring approximately two-years of staff review time. However, the NRC review should be facilitated in that:

- the design does not present any new or novel design features,
- the design does not introduce any new technical issues,
- the design is very similar to cask designs previously approved by the NRC and to cask designs currently under NRC review,
- the design considerations do not push the margins of previously reviewed/certified designs such as cask heat load and capacity, and
- the regulatory framework is in place to review the design.

The transportation cask design includes newly designed impact limiters that will require testing and/or modeling analysis to demonstrate the acceptability of the design. The topic of transport of high burn-up fuel is presently under much study and analysis by both the NRC and the industry. Further development of NRC's review guidance for transport of high burn-up fuel is anticipated over the next few years. At the time of license application, the applicant will need to confirm that the application is consistent with the then current NRC guidance on transport of high burn-up fuel. The applicant should anticipate that accident testing and analysis and the technical basis and assumptions for transport of high burn-up fuel will receive close NRC scrutiny.

COST ESTIMATE

Section 10.0 provides cost estimates, which, in accordance with the statement of work, address:

1. Up-front Costs associated with the design, analysis, testing, and licensing of the cask (see Table 10-1);

2. Cask System Acquisition Costs, including the cost to fabricate the entire transportation cask system, and unit costs as a function of the number of casks produced (see Table 10-2);

3. Cask Handling Equipment Costs at the shipping and receiving sites (see Table 10-5);

4. Cask Loading and Unloading Costs at the shipping and receiving sites (see Tables 10-6, 10-7, and 10-8); and

5. Cask Inspection, Maintenance and Refurbishment Costs (see Table 10-9).

TRADE-OFF STUDY BETWEEN THE DESIGN CONCEPTS FOR THE BARE FUEL AND DAMAGED FUEL CAN TRANSPORTATION CASKS

The Task Order 17 SOW required that a study be performed to cover the trade space between the design concepts for the PWR and BWR bare SNF transportation cask and the PWR and BWR damaged fuel can transportation cask, in order to assess how important attributes, such as capacity and cost, are expected to vary as the number of assemblies in DFCs which the cask must be able to accommodate is varied.. The results of this study are that, for capacity, the PWR

(32-PWR) and BWR (68-BWR) bare SNF design concepts are also able to accommodate combinations of 8 PWR assemblies in DFCs and 24 bare PWR assemblies, and 8 BWR assemblies in DFCs and 60 bare BWR assemblies, respectively. This is accomplished via certain cells on the periphery of the fuel baskets, which are large enough to accommodate the DFCs. The 32-PWR fuel basket could accommodate eight DFCs in the "corner" cells on the basket periphery and the 68-BWR fuel basket could accommodate eight DFCs around the basket edge.

Regarding cost, Table 10-2 itemizes the estimated acquisition costs for the PWR and BWR bare SNF and SNF in damaged fuel cans design concepts.

100 TON CASK

Preliminary evaluations show that a cask similar to that described in Section 4.1.1, with the cask diameter reduced from 70 inches to 59-60 inches, would be capable of accommodating 24 PWR fuel assemblies, with a basket design similar to the 32P basket described in Section 4.1.2.1. The available cask cavity length would be 180 inches (as is the case for the longer primary cask design). As with the primary cask designs, the water inside the cask interior will have to be pumped out before lifting the cask, to keep the hook weight under 100 tons. Also, as with the primary (32-PWR) design, a shorter version of the cask could be designed, if necessary, to keep the hook weight under 100 tons with water. Restrictions on the PWR assemblies that could be loaded into the 100 ton cask would be similar to those shown in the Table 4-4 loading specification. The number of non-periphery cells in the 24P basket may be as low as four. The allowable overall cask heat load for the 100 ton cask will be approximately 18-20 kW. If all high burnup assemblies are required to be placed into DFCs, then the capacity of the 100 ton cask would fall from 24 to 21 PWR assemblies, due to the larger basket cells required to accommodate DFCs. A payload of 21 assemblies inside DFCs will weigh less than a payload of 24 intact assemblies.

For BWR fuel, the payload capacity of the intact assembly basket would have to be reduced from 68 assemblies to 48 assemblies in order to fit within a 59-60 inch diameter cask cavity. The weight of a 48-assembly guide tube and spacer plate basket (similar to the design of the baskets described in Section 4.1.2) and a 48 BWR assembly payload, should be similar to or lower than that of the 24 PWR assembly basket and payload discussed above. If all high burnup assemblies are required to be placed into DFCs, then the capacity of the 100 ton cask would fall from 48 to 44 BWR assemblies, due to the larger basket cells required to accommodate DFCs.

CONCLUSION

This Task Order 17 report documents the SNF transportation cask concepts that have been developed, analyzed and evaluated by the Energy*Solutions* Team.

Key outputs from this study are:

1. Cask concepts have been developed and evaluated for fuel basket capacities of 32-PWR bare fuel assemblies, 28-PWR DFC assemblies, 68 BWR bare fuel assemblies and 61 BWR DFC assemblies. The bare fuel baskets actually can accommodate a small number of DFCs (containing damaged fuel assemblies) in the somewhat larger cell openings around the basket perimeter. The 32-PWR could accommodate eight DFCs in

the "corner" cells on the basket periphery and the 68-BWR could accommodate eight DFCs around the basket edge. The damaged fuel can baskets can, of course, accommodate a DFC in every cell opening.

2. The primary concept evaluated has a cask internal cavity length of 182″ and a diameter of 70" and is termed the "long" or "regular" cask. With regards to fuel assembly length, it can take all US BWR fuel and all US PWR fuel with the exception of CE 16×16 fuel with control components noting that full payloads of PWR fuel with assembly weights in excess of 1500 lbs (See Section 8 (Usability)) will require either a pool crane capacity in excess of 125 tons or the "short". It will also not accommodate South Texas Project or AP1000 fuels. The cask concepts are designed to accommodate any PWR or BWR fuel assembly payload that has an overall heat generation level of 24 kW or less. The overall envelope of the package (including the 128 inch diameter of the impact limiters) meets standard Association of American Railroads requirements. The transportation cask has a target "under-the-hook" weight of 125 Tons (250,000 lbs) when loaded with the internals and fuel. In an effort to maximize the shielding for the transportation cask but keep within the 125 ton limit, it has been determined that the loading operation will include the removal of internal water prior to lifting the cask from the pool. With respect to criticality, the system will be able to accommodate the entire US spent fuel inventory, the only qualification being that a slight reduction in payload capacity may be required for a very small fraction of shipments.

3. Details of a "short" cask have also been provided, which has the same cask internal cavity, but a reduced length of 174″. It could take all US PWR fuel, with the exception of CE 16×16 fuel; with or without inserted control components. However, most BWR fuels could not be loaded, because of their length. The short cask can accommodate full payloads of PWR assemblies with weights up to 1,725 lbs (which is bounding for all US PWR fuel, including inserted control components) without requiring a pool crane capacity in excess of 125 tons. The longer-cavity cask requires a pool crane capacity in excess of 125 tons in order to accommodate full payloads of PWR fuel with assembly weights in excess of 1,500 lbs.

4. Details of a 100 ton cask option have also been provided, which again would require the water inside the cask interior to be pumped out before lifting the cask from the spent fuel pool to keep the hook weight under 100 tons. It would be capable of accommodating 24-PWR bare fuel assemblies or 48-BWR bare fuel assemblies.

5. The structural, thermal, shielding and criticality analyses have been completed for the transportation cask design concepts and acceptable results have been obtained. The criticality analyses are dependent on the assumed state of the fuel. For the 32-PWR, 28-PWR, 68-BWR, and 61-BWR baskets, several different configurations have been modeled, which reflect various licensing contingencies. The evaluations of these alternative cases allow the impacts on system performance to be understood for various licensing contingencies (concerning how high burnup and/or damaged fuel are treated, for example).

6. Regarding modifying the cask design to take a higher than 24 kW thermal load, as documented in Section 4.3.2, increasing the cask's allowable payload heat generation

level from 24 kW to 28 kW does not result in neutron shield material temperatures significantly over the 300°F temperature limit. Thus, minor design changes such as increasing the quantity or thickness of the copper fins in the neutron shield region, are likely to be sufficient to allow a cask heat load of 28 kW. An alternate neutron shield material with a somewhat higher allowable service temperature would also allow that.

7. Operation of the cask design concepts is in line with bare fuel casks in use today and operating procedures and tests are based on industry standard practices.

8. A time and motion assessment was performed based on Exelon's bare fuel cask experience and the estimated loading time was 78 hours (from preparation of the empty transportation cask to placement of the loaded cask at the rail car loading area) and the unloading time was 50 hours (preparation of received loaded transportation cask to the empty cask placed on the fuel building floor). Automated vacuum drying and resource utilization to allow continuous 24/7 work are two items that could improve these times.

9. The conclusion of an assessment of the "licensability" of the transportation cask design concepts is that NRC approval of the SNF transportation cask design would be anticipated. The applicant should anticipate a detailed NRC review involving multiple technical disciplines requiring approximately two-years of staff review time. However, there are many cask design features and similarities to previously approved designs that should facilitate the NRC review. Testing and/or modeling analysis would be necessary to demonstrate the acceptability of the SNF transportation package including the newly designed impact limiters. Further development of NRC's review guidance for transport of high burn-up fuel is anticipated over the next few years. At the time of license application, the applicant will need to confirm that the application is consistent with the then current NRC guidance on transport of high burn-up fuel. The applicant should anticipate that the accident testing and analysis and the technical basis and assumptions for high burn-up fuel will receive close NRC scrutiny.

For reference, a cross-reference between the contents of this report and the Task Order 17 SOW is provided in Appendix C.

TABLE OF CONTENTS

1 Introduction 31
2 Purpose and Scope 32
3 Systems Engineering Approach 36
3.1 Phase 1 37
3.2 Phase 2 38
3.3 Phase 3 40
3.4 Phase 4A 40
3.5 Phases 4b, 5 and 6 42
3.6 Phase 7 42
4 Transportation Package Description for Bare Fuel and Damaged Fuel 42
4.1 Description of Design Concept 42
4.1.1 Transportation Cask 43
4.1.2 Cask Internal Baskets 47
4.1.3 Damaged Fuel Cans 51
4.2 Package Contents 57
4.2.1 Allowable Dimensions 58
4.2.2 Allowable Assembly Weights 59
4.2.3 Radiological and Thermal Constraints 60
4.2.4 Criticality Constraints 61
4.3 Design and Analysis Approach 63
4.3.1 Structural Analyses 63
4.3.2 Thermal Analyses 103
4.3.3 Shielding Analyses 122
4.3.4 Criticality Analyses 147
4.3.5 Containment Philosophy 164

5 Concept of Operations 168
5.1 General Transportation Cask Operating Procedures 168
5.1.1 Transportation Cask General Torque Table 169
5.1.2 Procedures for Empty Cask Receipt, Loading and Preparation for Transport 169
5.1.3 Procedures for Loaded Cask Receipt, Unloading and Release for Shipment 175
5.2 Time and Motion Assessments 180
5.3 Anticipated Worker Dose 182
5.4 Operational Efficiencies and Comparisons with Current Practice and Experience 183
6 Equipment Maintenance Requirements 184
6.1 Cask Maintenance 184
6.1.1 Structural and Pressure Tests of the Cask 184
6.1.2 Leak Tests 185
6.1.3 Subsystems Maintenance 185
6.1.4 Valves, Rupture Disks and Gaskets on the Containment Vessel 186
6.1.5 Shielding 186
6.1.6 Periodic Thermal Test 186
6.1.7 Miscellaneous Inspections 186
6.1.8 Maintenance Program Schedule 187
6.2 Auxiliary equipment maintenance 188
6.3 UK Lessons Learned and Experience from Maintaining a Fleet of Bare Fuel Casks 189
7 Ability to Fabricate 191
8 Usability 192
8.1 Plant Loading Scenario Evaluations 192
8.1.1 Loading Scenario Assumptions 193
8.1.2 Operating Plant Loading Scenario 193
8.1.3 Shutdown Plant Loading Scenario 194
9 Regulatory Compliance 206

9.1 Applicable Requirements 206

9.2 DOE Guidance on Cask Design Specifications and Assumptions 207

9.3 Cask Design Considerations 208

9.4 NRC Review Considerations 209

9.5 Regulatory Conclusion 210

10 Cost Estimate 211

10.1 Up-Front Cost 211

10.2 Cask System Acquisition Costs 212

10.3 Cask Handling Equipment Costs 216

10.4 Cask Loading and Unloading Costs 216

10.5 Cask Inspection, Maintenance and Refurbishment Costs 221

11 Trade-off Study between the Design Concepts for the Bare Fuel and Damaged Fuel Can Transportation Casks 221

12 100-Ton Cask 222

13 Special Features that Could Improve the Base Designs 222

13.1 28 kW Cask 223

14 Conclusion 225

15 References 228

16 Appendices 232

APPENDIX A - Results from Facilitated Workshop # 1, Columbia, MD, Workshop, September 23 - 25, 2014 233

APPENDIX B - Results from Facilitated Workshop # 2 (incorporating the Initial Progress Review), Columbia, MD, October 28 - 29, 2014 244

APPENDIX C - Cross-reference between Task Order 17 Scope of Work and the SNF Transportation Cask Design Study Report 248

APPENDIX D - Transportation Cask Design Concept Drawings 252

APPENDIX E - Cask Internal Fuel Baskets Design Concept Drawings 254

APPENDIX F - Calculations (NOT USED) 287

APPENDIX G – Basis of Estimates 288

APPENDIX H – Unit Costs (Cost Portion) 292

LIST OF FIGURES

Figure 3-1. Logic Diagram Showing Systems Engineering Approach..... 37

Figure 4-1. Cross-Section View of the Regular Transportation Cask 45

Figure 4-2. Section View Showing Attachment of the Closure Lid to the Cask Body 45

Figure 4-3. General View of Transportation Cask Mounted on Railcar Skid 46

Figure 4-4. Intact PWR Assembly (32-PWR) Basket 53

Figure 4-5. Damaged PWR Assembly (28-PWR) Basket 54

Figure 4-6. Intact BWR Assembly (68-BWR) Basket..... 55

Figure 4-7. Damaged BWR Assembly (61-BWR) Basket 56

Figure 4-8. Damaged Fuel Can Assembly for PWR Fuel 57

Figure 4-9. End Drop – Energy Dissipation by Crush Distance..... 73

Figure 4-10. Side Drop – Energy Dissipation by Crush Distance 74

Figure 4-11. Corner Drop – Approximated Deformed Shape 75

Figure 4-12. Details of the ANSYS Model and Boundary Conditions 77

Figure 4-13. Top Forging Showing Stresses near Trunnion..... 82

Figure 4-14. Side and End Views for the Transportation Cask 85

Figure 4-15. 32P Basket Structural Model 88

Figure 4-16. 32P Basket 60g 0° Side Drop S.I. Contour Plot..... 90

Figure 4-17. 32P Basket 60*g* 16° Side Drop S.I. Contour Plot..... 91

Figure 4-18. 32P 45° Side Drop Deformations Preceding Plastic Instability..... 91

Figure 4-19. 28P Basket Structural Model 92

Figure 4-20. 28P Basket 60g 0° Side Drop S.I. Contour Plot..... 94

Figure 4-21. 28P Basket 60g 45° Side Drop S.I Contour Plot..... 95

Figure 4-22. 28P 0° Side Drop Deformation Preceding Plastic Instability Load 95

Figure 4-23. 68B Spacer Plate Structural Model 96

Figure 4-24. 68B Basket 60g 0° Side Drop S.I. Contour Plot 98

Figure 4-25. 68B Basket 60g 27°Side Drop S.I. Contour Plot 98

Figure 4-26. 68B 27° Side Drop Deformations Preceding Plastic Instability Load 99

Figure 4-27. 61B Spacer Plate Structural Model 100

Figure 4-28. 61B Basket 60g 0° Side Drop S.I. Contour Plate 102

Figure 4-29. 61B Basket 60g 35° Side Drop S.I. Contour Plot 102

Figure 4-30. 61B 45° Side Drop Deformations Preceding Plastic Instability Load 103

Figure 4-31. Thermal Boundary Conditions – Side View 105

Figure 4-32. Thermal Boundary Conditions – End View 106

Figure 4-33. Thermal Gradients – Half-Symmetry Model for PWR Thermal Profile 107

Figure 4-34. Fin/NS-4-FR Temperatures - PWR 107

Figure 4-35. Evaluation of Upper Forging Area 108

Figure 4-36. Evaluation of Junction of Thermal Fins and Neutron Shield Shell 108

Figure 4-37. Thermal Gradients – Half-Symmetry Model for BWR Thermal Profile 109

Figure 4-38. Fin/NS-4-FR Temperatures - BWR 110

Figure 4-39. Basket and Assembly Material Temperature Distribution – 32P Basket – Uniform Payload 115

Figure 4-40. Basket and Assembly Material Temperature Distribution – 32P Basket – Concentrated Payload 116

Figure 4-41. Basket and Assembly Material Temperature Distribution – 28P Basket – Uniform Payload 117

Figure 4-42. Basket and Assembly Material Temperature Distribution – 28P Basket – Concentrated Payload 118

Figure 4-43. Basket and Assembly Material Temperature Distribution – 68B Basket – Uniform Payload 119

Figure 4-44. Basket Structure Material Temperature Distribution – 68B Basket – Concentrated Payload 120

Figure 4-45. Basket and Assembly Material Temperature Distribution – 61B Basket- Uniform Payload 121

Figure 4-46. Basket and Assembly Material Temperature Distribution - 61B Basket – Concentrated Payload 122

Figure 4-47. R-Z Shielding Model Illustration 124

Figure 4-48. Basket Top Corner Shield Ring Illustration 139

Figure 4-49. Basket Bottom Corner Shield Ring Illustration 140

Figure 4-50. MAGNATRAN Intact Fuel and DFC Burnup Curves vs. US PWR Fuel Inventory 163

Figure 10-1. Cask Loading Process High-Level Steps 216

Figure 10-2. Cask Unloading Process High-Level Steps 219

Figure B-1. Cask and Basket Combinations 246

LIST OF TABLES

Table 3-1. Criticality Analysis Assumptions and Approaches for addressing Bare Fuel and DFC Cask Concepts – Guidance Provided by DOE 40

Table 3-2. Criticality Analysis Assumptions and Approaches for Addressing Hybrid Cask Concepts – Guidance Provided by DOE. 41

Table 4-1. Cask Component Estimated Weights 43

Table 4-2. Key Basket and DFC Dimensions 52

Table 4-3. PWR Fuel Allowable Initial Enrichment vs Burnup for 32P and 28P Baskets 62

Table 4-4. Fuel Loading Specifications 63

Table 4-5. End Drop - Maximum Accelerations and Crush Distances 73

Table 4-6. Side Drop - Maximum Accelerations and Crush Distances 75

Table 4-7. Corner Drop – Maximum Acceleration and Crush Distances 75

Table 4-8. Bolt Stresses 77

Table 4-9. Factors of Safety for the Maximum Bolt Load 81

Table 4-10. Section Path End Point Locations 81

Table 4-11. Stresses and Safety Factors for Section Path End Point Locations 82

Table 4-12. Stress Evaluation Results 86

Table 4-13. Reactions for CFR 71.45b Loading 86

Table 4-14. Reactions for AAR Rule 88 Loading 87

Table 4-15. Plastic Material Properties for SA-537 Class 1 Carbon Steel 89

Table 4-16. 32P Basket HAC Side Drop Stress Analysis Results 90

Table 4-17. 28P Basket HAC Side Drop Stress Analysis Results 93

Table 4-18. Plastic Material Properties for SA-517 Grades F or P Carbon Steel 97

Table 4-19. 68B Basket HAC Side Drop Stress Analysis Results 97

Table 4-20. 61B Basket HAC Side Drop Stress Analysis Results 101

Table 4-21. Thermal Performance of Materials 104

Table 4-22. Cases and Temperatures – Summary 111

Table 4-23. Summary of Basket Thermal Analysis Results 114

Table 4-24. Peak Cask Exterior Surface Dose Rates for 30 GWd/MTU, 2.5% Initial Enrichment, 5 Year Cooled PWR Fuel (uniform, 32-assembly, 1.8 kW/MTU payload) 132

Table 4-25. Peak Cask Exterior Surface Dose Rates for 35 GWd/MTU, 2.75% Initial Enrichment, 6 Year Cooled PWR Fuel (uniform, 32-assembly, 1.8 kW/MTU payload) 132

Table 4-26. Peak Cask Exterior Surface Dose Rates for 40 GWd/MTU, 3.0% Initial Enrichment, 7 Year Cooled PWR Fuel (uniform, 32-assembly, 1.8 kW/MTU payload) 133

Table 4-27. Peak Cask Exterior Surface Dose Rates for 45 GWd/MTU, 3.25% Initial Enrichment, 10-year Cooled PWR Fuel (uniform, 32-assembly, 1.8 kW/MTU payload) 133

Table 4-28. Peak Cask Exterior Surface Dose Rates for 50 GWd/MTU, 3.5% Initial Enrichment, 13 Year Cooled PWR Fuel (uniform, 32-assembly, 1.8 kW/MTU payload) 133

Table 4-29. Peak Cask Exterior Surface Dose Rates for 55 GWd/MTU, 3.75% Initial Enrichment, 18 Year Cooled PWR Fuel (uniform, 32-assembly, 1.8 kW/MTU payload) 134

Table 4-30. Peak Cask Exterior Surface Dose Rates for 60 GWd/MTU, 4.0% Initial Enrichment, 23 Year Cooled PWR Fuel (uniform, 32-assembly, 1.8 kW/MTU payload) 134

Table 4-31. Peak Cask Exterior Surface Dose Rates for 62.5 GWd/MTU, 4.0% Initial Enrichment, 25 Year Cooled PWR Fuel (uniform, 32-assembly, 1.8 kW/MTU payload) 134

Table 4-32. Peak Cask Exterior Surface Dose Rates for 30 GWd/MTU, 2.25% Initial Enrichment, 5 Year Cooled BWR Fuel (uniform, 68-asssembly, 2.0 kW/MTU payload) 135

Table 4-33. Peak Cask Exterior Surface Dose Rates for 35 GWd/MTU, 2.5% Initial Enrichment, 6 Year Cooled BWR Fuel (uniform, 68-assembly, 2.0 kW/MTU payload) 135

Table 4-34. Peak Cask Exterior Surface Dose Rates for 40 GWd/MTU, 2.75% Initial Enrichment, 9 Year Cooled BWR Fuel (uniform, 68-assembly, 2.0 kW/MTU payload) 135

Table 4-35. Peak Cask Exterior Surface Dose Rates for 45 GWd/MTU, 3% Initial Enrichment, 11 Year Cooled BWR Fuel (uniform, 68-assembly, 2.0 kW/MTU payload) 136

Table 4-36. Peak Exterior Surface Dose Rates for 50 GWd/MTU, 3.0% Initial Enrichment, 13 Year Cooled BWR Fuel (uniform, 68-assembly, 2.0 kW/MTU payload) 136

Table 4-37. Peak Exterior Surface Dose Rates for 55 GWd/MTU, 3.25% Initial Enrichment, 17 Year Cooled BWR Fuel (uniform, 68-assembly, 2.0 kW/MTU payload) 136

Table 4-38. Peak Exterior Surface Dose Rates for 60 GWd/MTU, 3.5% Initial Enrichment, 22 Year Cooled BWR Fuel (uniform, 68-assmebly, 2.0 kW/MTU payload) 137

Table 4-39. Peak Exterior Surface Dose Rates for 62.5 GWd/MTU, 3.5% Initial Enrichment, 25 Year Cooled BWR Fuel (uniform, 68-assembly, 2.0 kW/MTU payload) 137

Table 4-40. Peak Cask Exterior Surface Rates for 12 Assemblies in 32P Basket Center 62.5 GWd/MTU, 4.0% Initial Enrichment, 5 Year Cooled PWR Fuel 143

Table 4-41. Peak Cask Exterior Surface Dose Rates for Zone-Loaded 32P Basket Center 12 Cells: 62.5 GWd/MTU, 4.0% Initial Enrichment, 5 Year Cooled PWR Fuel 20 Periphery Cells: 40 GWd/MTU, 3.0% Initial Enrichment, 30 Year Cooled PWR Fuel 144

Table 4-42. Peak NCT 2-meter Side Surface Dose Rates for Bounding (Artificial) Zone-Loaded 32P Basket Payload Configurations (Center 12 Cells Contain 62.5 GWd/MTU, 4.0% Initial Enrichment, 5 Year Cooled PWR Fuel – All Cases) 145

Table 4-43. Peak Package Side Surface Dose Rates for Bounding (Artificial) Zone-Loaded 32P Basket Payload Configurations (Center 12 cells Contain 62.5 GWd/MTU, 4.0% Initial Enrichment, 5 Year Cooled PWR Fuel – All Cases) 146

Table 4-44. Summary of PWR Criticality Evaluation Results 155

Table 4-45. Summary of BWR Criticality Evaluation Results 162

Table 4-46. Code Requirements for Containment Welds 165

Table 4-47. Containment Boundary Leakage Rate Limits 167

Table 5-1. General Torque Table 169

Table 5-2. Bare Fuel Cask Loading Time and Motion Assessment 181

Table 5-3. Bare Fuel Cask Unloading Time and Motion Assessment 181

Table 6-1. Maintenance Program Schedule 188

Table 8-1. Calculation of PWR Fuel-Pool-Average Assembly Heat Generation Level at Time of Pool Unloading 196

Table 8-2. Calculation of BWR Fuel-Pool-Average Assembly Heat Generation Level at Time of Pool Unloading 197

Table 8-3. Time Required After Plant Shutdown to Fully Unload PWR Spent Fuel Pool..... 200

Table 8-4. Time Required After Plant Shutdown to Fully Unload BWR Spent Fuel Pool 201

Table 8-5. Upper-Bound Estimate of Dry Storage Impact on Time to Unload Pool PWR..... 204

Table 10-1. Up-Front Costs by Phase and Staff/Acquisition Type 213

Table 10-2. Cask System Acquisition Costs..... 214

Table 10-3. Cask, Basket, and DFC Acquisition Component Costs 215

Table 10-4. Cask Unit Costs – Initial and Full-up Production 215

Table 10-5. Handling Equipment Costs..... 216

Table 10-6. Loading Costs and Duration..... 218

Table 10-7. Loading Costs by Cask Type..... 219

Table 10-8. Unloading Costs and Durations..... 220

Table 10-9. Cask Other Costs 221

Table A-1. Task Order 17 Technical Framework. 238

Table G-1. Up-Front Costs by Phase and Staff/Acquisition Type..... 289

Table G-2. Cask System Acquisition Component Base Costs 290

Table G-3. Loading Costs Basis of Estimate 291

Table G-4. Unloading Costs Basis of Estimate 292

Table H-1. Unit Costs. 292

Acronyms

AAR	Association of American Railroads
A&AS	Advisory and Assistance Service
AGR	Advance Gas-Cooled Reactor
ANSI	American National Standards Institute
ASME	American Society of Mechanical Engineers
AWS	American Welding Society
B&W	Babcock & Wilcox
BWR	Boiling Water Reactor
CE	Combustion Engineering
CFR	Code of Federal Regulations
CG	Center of Gravity
CoC	Certificate of Compliance
CRA	Control Rod Assembly
CSI	Criticality Safety Index
DFC	Damaged Fuel Can
DOE	U.S. Department of Energy
DOT	U.S. Department of Transportation
EN	Electroless Nickel
EPDM	Ethylene Propylene Diene Monomer
FE	Finite element
FEA	Finite element analysis
FGMSP	First Generation Magnox Storage Ponds
FHP	Fuel Handling Plant
FSAR	Final Safety Analysis Report
GWd/MTU	Gigawatt-days/Metric Ton of Uranium
HAC	Hypothetical Accident Condition
HBU	High Burn-up
ISF	Interim Storage Facility
ISFSI	Independent Spent Fuel Storage Installation
ISG	Interim Staff Guidance document
kW	Kilowatt
K_{eff}	Effective Neutron Multiplication Factor
LWR	Light Water Reactor
MEB	Multi Element Bottle
MOX	Mixed oxide
MT	Metric Ton
MWd/MTU	Megawatt-days/Metric Ton of Uranium

MTU	Metric Ton of Uranium
NCT	Normal Conditions of Transport
NFC	Non-Fuel Components
NRC	U.S. Nuclear Regulatory Commission
NUREG	NRC Regulation Technical Report
OCRWM	Office of Civilian Nuclear Waste Management
PWR	Pressurized Water Reactor
QA	Quality Assurance
SAR	Safety Analysis Report
SNF	Spent Nuclear Fuel
SOW	Statement of Work
SSC	Structure, System and Component
SRP	Standard Review Plan
Te	metric ton
UK	United Kingdom
UNF	Used Nuclear Fuel
VDS	Vacuum Drying Skid
Wt	Weight

1 INTRODUCTION

On August 11, 2014, under the U.S. Department of Energy (DOE) Advisory and Assistance Services (A&AS), an integrated team headed by Energy*Solutions* was one of two teams that were awarded Task Order 17: Assist the DOE Office of Nuclear Energy in implementing a study to develop design concepts and associated information on the characteristics of the following two types of Spent Nuclear Fuel (SNF) rail transportation casks:

1. A reusable rail cask optimized for transport of intact individual bare (not canistered) SNF assemblies. This cask system would be single-purpose in nature, i.e. optimized for transport, and would not be intended for use in providing an extended storage capability.

2. A reusable rail cask optimized for transport that is able to accommodate assemblies in Damaged Fuel Cans (DFCs) in all positions.

A study of the trade space between the above two design concepts was also requested, i.e. what are the impacts (cost, time, infrastructure, etc.) if some locations for DFCs were included in a bare fuel cask?

The background to Task Order 17 is that, in support of operations at one or more Interim Storage Facilities, it is envisioned that a capability to ship SNF directly from the spent fuel pools of nuclear power plants to an Interim Storage Facility (ISF) would be desirable. The work performed under Task Order 17 is a component of laying the groundwork for future options and the study results are intended to provide important information to system analysts and planners on the attributes of the above cask design concepts including their capacity limitations and estimated costs.

The Energy*Solutions* team assembled for this task consists of the following members:

- Energy*Solutions* - Full nuclear fuel cycle company with interests in Federal and commercial nuclear waste treatment, clean-up and disposition, nuclear reactor and legacy facility decommissioning, SNF treatment, storage and disposition, and SNF recycling.

- NAC International - Specialties include nuclear materials transport, and spent fuel storage and transport technologies. NAC has provided transportable SNF storage canisters and casks for a significant proportion of the commercial nuclear reactor utilities in the U.S.

- Exelon Nuclear Partners - A business unit of Exelon Generation. Operates 22 nuclear units and two retired units, with 11 Independent Spent Fuel Storage Installations (ISFSIs) at both boiling water reactor (BWR) and pressurized water reactor (PWR) sites. Maintains over 10,000 Metric Tons Uranium (MTU) of used nuclear fuel (UNF) in pool storage and has moved over 3,500 MTU of SNF into approximately 320 dry cask systems.

- Talisman International - A consulting company specializing in nuclear regulatory issues, covering safety and security of nuclear facilities, regulation and classification of nuclear facilities and the wastes they produce. Talisman has a number of former senior U.S. Nuclear Regulatory Commission (NRC) managers on its staff.

- Booz Allen Hamilton - A technology and strategy consulting company with extensive experience in performing economic analysis and risk management assessments, and developing strategic plans and business models for nuclear industry vendors and utilities.

2 PURPOSE AND SCOPE

The purpose of this report is to document the transportation cask design concepts, which have been developed, analyzed, and evaluated by Energy*Solutions* and its team partners: NAC International, Talisman International, Booz Allen Hamilton and Exelon Nuclear Partners, hereafter referred to as "the Team".

The Task Order 17 Statement of Work (SOW) provided by the DOE identified the following requirements:

Using experience designing, licensing, and supplying SNF cask systems to commercial utilities in the U.S. and any information supplied by DOE, the Contractor(s) shall:

1) *Develop a reusable SNF rail-type transportation cask system design concept optimized for transport of intact bare (not canistered) SNF. The cask system is not required to support long-term SNF storage, but must be capable of satisfying the requirements listed under item 7 below. Variations of the cask to accommodate Pressurized Water Reactor (PWR) assemblies and to accommodate Boiling Water Reactor (BWR) assemblies shall be provided.*

2) *Develop a reusable SNF rail-type transportation cask system design concept optimized for transport assuming all SNF assemblies are in DFCs. This cask system includes the DFCs. The cask system is not required to support long-term SNF storage, but must be capable of satisfying the requirements listed under item 7 below. Variations of the cask to accommodate PWR assemblies and to accommodate BWR assemblies shall be provided.*

3) *For each design concept described in items 1 and 2 above, develop estimates of the up-front costs associated with design, analysis, testing, and licensing the cask and of the cost to fabricate the entire transportation cask system, including cask internals and impact limiters. An estimated unit cost for a cask should be provided as a function of the number of casks produced. The estimated cost for cask handling equipment at the shipping and receiving site is also to be provided.*

4) *For each design concept described in items 1 and 2 above, develop a concept of operations, including assessments of the time and motion required for loading the fuel at the reactor pools and unloading from the transportation casks. Also, provide the anticipated worker dose for performing these operations. For the cask design concept described in item 2 above, these operational steps shall include loading assemblies into DFCs for transport and unloading the DFCs at the receiving facility. The system design concept and associated concept of operations shall seek to achieve operational efficiencies and worker exposures that are comparable with, if not better than, current*

practice of loading DFCs and SNF into non-canistered transportation systems. A comparison of the estimated time requirements and worker exposures to those currently incurred in loading bare fuel casks and also in loading dual-purpose (storage and transport) SNF canisters shall be provided for comparison purposes.

5) *Identify equipment maintenance requirements including testing, maintenance, and performance requirements for structures, systems, and components (SSCs) important to safety.*

6) *Provide additional key information associated with each of the SNF transportation cask system design concepts, including information on dimensions, component masses, total mass for both fully loaded and unloaded conditions, maximum thermal loading, and estimated dose rates during normal conditions of transport (NCT). Also provide supporting analyses indicating that the transportation cask system, including the cask, impact limiters, and DFCs (when applicable), would be licensable and usable for transportation under 10 CFR Part 71.*

7) *Cask System Requirements: In addition to providing reasonable assurance that the cask concepts would be capable of meeting 10 CFR Part 71 requirements, the casks system must be able to meet the following requirements:*

    a. *The system design concept, including impact limiters, will have a maximum width of 128 inches. The reason for this limit is that DOE intends to transport this cask on railcars that conform to Association of American Railroads (AAR) Standard S-2043, which allows a maximum railcar width of 128 inches. See paragraph 4.7.9.1 of Standard S-2043. The cask design concept, including impact limiters, shall not be wider than this maximum railcar width.*

    b. *The system must allow for the transportation of high-burnup fuel (>45GWd/MTU) with a target of transporting fuel with an average assembly burnup of up to 62.5GWd/MT with up to 5.0 wt% enrichment and out-of-reactor cooling time of 5 years.*

    c. *Reasonable assurance that the design concepts can accommodate essentially the entire existing and future inventory of commercial light-water reactor SNF must be provided, without undue penalty (e.g., reduced cask capacity resulting in sub-optimization for the majority of anticipated shipments). Specific fuel designs or attributes (e.g., fuel length, assembly decay heat limits, or burnup limits) not allowed by the cask design concepts must be identified.*

    d. *In addition to the NRC's regulations, design activities shall also consider applicable regulatory guides and recent licensing experience and actions related to transportation cask design, fabrication, and operations. Any applicable U.S. Department of Transportation (DOT) requirements and constraints of AAR S-2043 that may have an impact on cask design shall also be considered.*

e. The cask system for DFCs in all positions will place constraints on capacity due to the size of the DFCs. The design concepts should satisfy all appropriate regulatory and operational limits, while maximizing capacity.

f. The transportation casks shall be capable of being closed and reopened multiple times, so the cask can be reused for many shipments. The method for closing and reopening shall be described. Factors limiting the possible number of times that the cask can be reused shall be identified, along with possible means for extending life and reusability of the casks.

g. The loaded and closed DFCs shall also be capable of being reopened, to allow assembly repackaging, and the method for reopening shall be described.

h. Consistent with current industry designs, the DFCs shall be vented at the top and bottom.

8) To cover the trade space between the two design concepts described in items 1 and 2 above, a study to assess how important cask attributes, such as capacity and cost, are expected to vary as the number of assemblies in DFCs which the cask must be able to accommodate is varied. For the cask described in Item 1, the study results would provide information on what the estimated impacts would be if some locations for DFCs were included in the cask along with locations for intact bare fuel assemblies.

9) Consideration of any special features which could be introduced into the cask design concepts which would allow for optimization, such as increased capacity, reduced cost, and/or reduced maintenance shall be explored by the Contractor, the results of which are to be made available in the final report.

To meet the requirements of Task Order 17, the Team has followed a seven-phase approach, in order to develop design concepts and associated information on the characteristics of the requested types of SNF rail transportation casks. The seven phases are:

- Phase 1 - Review existing information, define functional requirements and establish a technical framework that forms the basis for transportation cask and system concept development, including a cask that is optimized for the specified intact bare SNF and a cask that is optimized for SNF contained in DFCs. This phase has been completed.

- Phase 2 - Brainstorm and down-select, via a facilitated workshop involving representatives from the Team, to a shortlist of options, ideas and recommendations for the transportation casks to address with additional scrutiny in Phases 3 and 4. This phase has been completed.

- Phase 3 - Development of the shortlisted cask options identified in Phase 2 in order to determine which ones are viable for detailed consideration during Phase 4. This phase concluded with the Initial Progress Review meeting with the DOE on October 28, 2014.

- Phase 4A - Initially, via a second facilitated workshop, review the results from Phases 1 through 3, together with DOE feedback from the Initial Progress Review, and confirm the viable options, which will be subjected to more detailed evaluation. Subsequently, the

down-selected design concepts are being developed in more detail, including engineering drawings, scoping calculations, initial costs estimates and an initial concept of operations. This phase concluded with the submission of a Preliminary Report to the DOE and a briefing on this report at the Second Progress Review meeting, which took place on January 7, 2015.

- Phases 4B, 5 and 6. These phases were essentially completed in parallel and comprised of:
    - Phase 4B – Building on DOE feedback on the Preliminary Report, completing design concepts, scoping calculations, cost estimates and concept of operations, establishing key cask data and identifying equipment maintenance requirements.
    - Phase 5 – Completion of a trade-off study between the bare fuel cask concept and the 100% DFC cask concept, in order to assess how factors including capacity and cost vary as the number of SNF assemblies in DFCs which the cask must accommodate is varied from zero to 100%. The objective being to allow conclusions to be made on what the impacts would be if some locations for DFCs were included in the cask that otherwise contains bare SNF. It should be noted that although shown as occurring later in the phased approach, the trade-off study did commence in Phase 3.
    - Phase 6 – Considering special features, which would allow for optimization, e.g., increased capacity, reduced costs, reduced equipment maintenance requirements, etc. It should be noted that although shown as occurring later in the phased approach, the identification and evaluation of special features has occurred from Phase 1 onwards.

Phases 4B, 5 and 6 concluded with the submission of the Draft Final Report to the DOE and a briefing on the Draft Final Report at the Final Progress Review meeting.

- Phase 7 – This was the final phase of work by the Team on Task Order 17 and involved addressing the DOE's comments on the Draft Final Report and submitting a Final Report for the SNF Transportation Cask Design Study to the DOE.

This Final Report documents the output from the above approach and is structured as follows:

- Section 3, Systems Engineering Approach, outlines the process that has been followed to complete the SNF transportation cask design study.
- Section 4, Transportation Package Description for Bare Fuel and Damaged Fuel, describes the cask design concepts, the parameters and loading specifications for the SNF that can be transported by these concepts, plus the approaches used for, and the results obtained from, the structural, thermal, shielding and criticality scoping calculations.
- Section 5, Concept of Operations, describes the operating procedures, results from time and motion assessments, anticipated worker doses and a discussion on operational efficiencies and comparisons with current practice and experience.

- Section 6, Equipment Maintenance Requirements, addresses maintenance of the casks and associated auxiliary equipment.
- Section 7, Ability to Fabricate, provides an assessment of the ability to fabricate the cask designs within current facilities and capabilities.
- Section 8, Usability, discusses the SOW requirement that the cask systems must ultimately be usable by all or most nuclear utilities, addresses their usability for future pool inventories and how the casks systems could be loaded to accommodate fuel with different heat loadings.
- Section 9, Regulatory Compliance, discusses the applicable requirements, DOE guidance on cask design specifications and assumptions, cask design considerations, Nuclear Regulatory Commission (NRC) considerations and an overall assessment of the ability to license the cask systems.
- Section 10, Cost Estimate, covers design, analysis, testing, and fabrication costs for the entire cask system, including cask internals, impact limiters, and cask handling equipment at the shipping and receiving site.
- Section 11, Trade-off Study between the Design Concepts for the Bare Fuel and Damaged Fuel Can Transportation Casks, addresses what the impacts will be, e.g., cost and capacity, if some locations for DFCs were included in the bare fuel cask systems.
- Section 12, 100 Ton Cask, describes this optional cask system for nuclear power plants with fuel building crane capacities that are less than 125 Tons.
- Section 13, Special Features that could improve the Base Designs, discusses trade-offs and break points in the cask system designs and unproven items that could provide benefits; subject to additional research and development.
- Section 14, Conclusion, provides the key results from the study.

For reference, a cross-reference between the contents of this report and the requirements of the SOW is provided in Appendix C.

3 SYSTEMS ENGINEERING APPROACH

As indicated in the Technical Proposal submitted to DOE on July 14, 2014, the intent was to follow a seven-phase approach, in order to perform the scope of work for the SNF transportation cask design study. Figure 3-1 shows a logic diagram of the systems engineering approach used by the team.

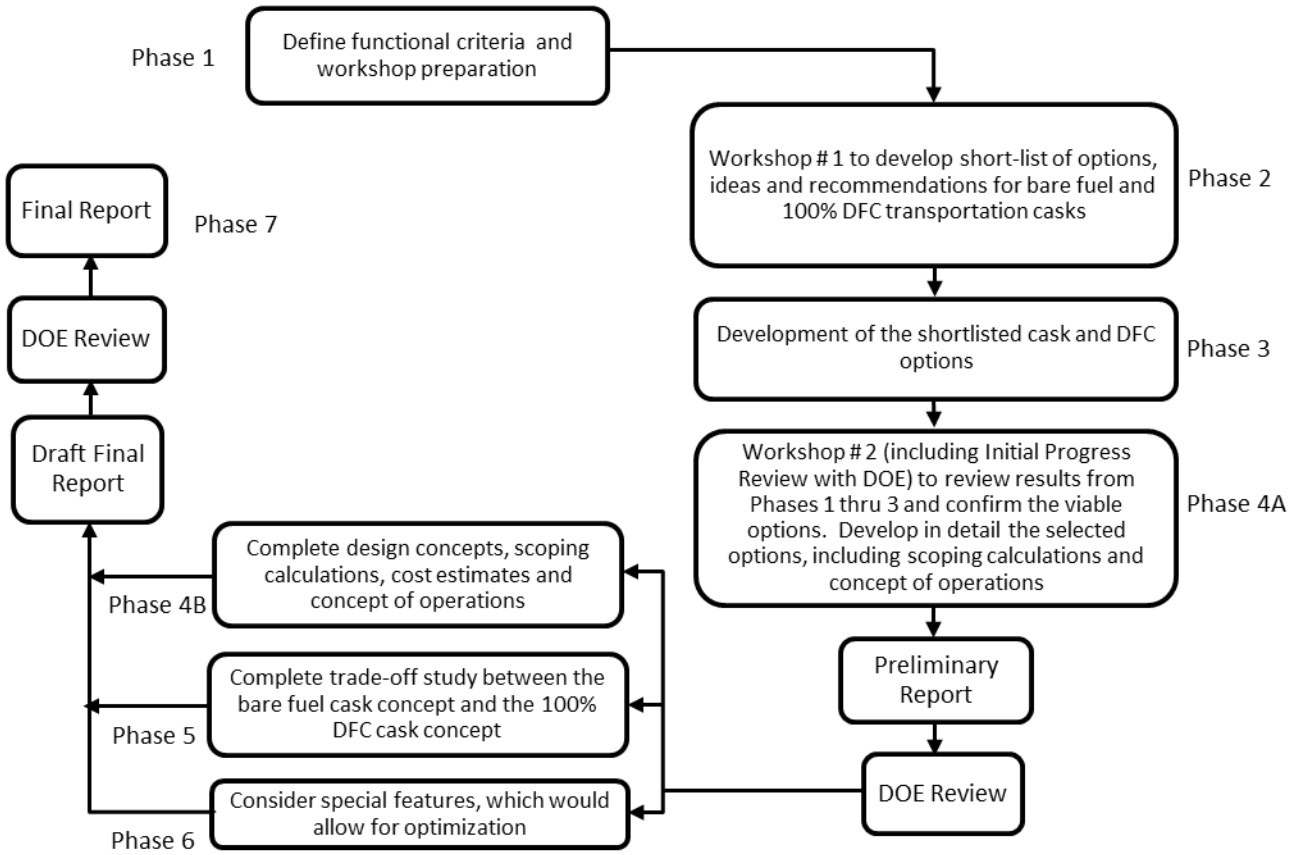

Figure 3-1. Logic Diagram Showing Systems Engineering Approach.

3.1 PHASE 1

Subsequent to the award of Task Order 17 on August 11, 2014, the Team prepared for Workshop # 1 (see Section 3.2) by gathering, researching, and developing information pertinent to the SOW. The purpose of this exercise was to share the information amongst the Team, via presentations and technical discussions, during the workshop. The topics covered and key points from the presentations are described in Appendix A. Objective statements for both the workshop and the study were also drafted for review and acceptance at the workshop.

Phase 1 also saw work begin, via internal technical interface meetings, on identifying cask concepts for consideration at the workshop; including the target number of PWR and BWR fuel assemblies in either bare or DFC configurations, maximum fuel length, target total cask heat load, and target weights for the cask body (includes cask body, inner lid, and the lifting yoke), and the cask internals (includes the basket, fuel and water [assuming the water isn't removed from the cask prior to it being removed from the pool]). The team also focused on existing bare fuel casks manufactured by NAC International; with a view to adopting and adapting elements of their designs for the purposes of the study.

In conjunction with the internal technical interface meetings, two bi-weekly status calls took place between the Team and DOE; from which a couple of key items resulted:

- **Crane Capacity** – It was agreed that a conceptual design for a 125 ton cask will be produced and the impacts associated with a 100 ton cask identified. The basis for this decision was that >75% of the operating plants will be able to handle a 125 ton cask using their spent fuel pool cranes.

- **Fuel Length** – A maximum fuel length of 180" was chosen as a starting point, which captures the Palo Verde fuel, but not the South Texas Project fuel assemblies or the AP1000 fuel assemblies for Vogtle 3&4 and VC Summer 2&3.

3.2 PHASE 2

Phase 2 commenced upon completion of Phase 1. A facilitated workshop was held from September 23-25, 2014, which was attended by representatives from each company within the Team. A description of the Phase 2 workshop results is provided in Appendix A and the key outputs from the workshop are described below.

1. A technical framework was developed, which is provided in Appendix A and captures functional criteria, constraints and assumptions, including the guidance provided by the DOE during Phase 1 on crane capacity and fuel length.

2. It was decided to continue the development and evaluation of the following cask concepts, with a cask cavity length of 180 inches (Note. Subsequently increased to 182 inches) and an inside diameter of 70 inches:

    a. 32 PWR bare assemblies

    b. 28 PWR DFC assemblies

    c. 68 BWR bare assemblies

    d. 61 or 57 BWR DFC assemblies

    e. DFC cells mixed in with the bare PWR and BWR cask concepts

3. Due to the Phase 1 work on initial cask concepts identifying challenges with the fully loaded cask weights being close to the 125 ton limit, options for weight reduction were evaluated (look at different materials, pump water out of the casks before it is lifted from the pool), in conjunction with performing initial shielding, criticality, thermal and structural scoping calculations

4. A target total heat load of 24kW was identified and it was agreed that options to increase the heat load would be evaluated, noting that the neutron shielding material limits the total heat load that can be transported. A cask heat load of 24 kW is a value that has typically been achieved by successfully licensed transport casks in the past, with the allowable temperature for the neutron shielding material that is generally used being the governing factor that limits the cask heat load.

Two requests were also made by the team to the DOE subsequent to the workshop and the requests and DOE responses are described below.

Request # 1:

The EnergySolutions team will show that we can take 62.5 GWd/MT @ 5yr cooled fuel and design a transportation cask on the basis that not every cell is filled with this high burnup fuel, i.e. different loading scenarios and using the SNF burnup and enrichment distribution data that is available today. Regarding whether our concepts for PWR and BWR SNF have the ideal/optimum capacity for the future, it would be very beneficial to our team if we can, via DOE, utilize the National Laboratories expertise in the Transportation Storage Logistics (TSL) model and the Total System Model (TSM). Ideally, we would like the following future inventory projection:

- *On a per site basis, provide the Burnup and Enrichment per fuel assembly stored in the pool, the anticipated plant operating status (operating or shutdown (with operational pool)) and the assumed rail cask pick-up frequency using, as a starting point, 2025 as the date when the Large Interim Storage Facility will be available to receive bare fuel casks.*

DOE Response:

It was agreed that an average of 750 watts per assembly as proposed by EnergySolutions is an acceptable assumption to proceed with for this particular study, given a focus on maximizing the number of assemblies which can be accommodated while satisfying other constraints. A higher value would be even more desirable, if achievable without penalty in terms of cask payload capacity. The basis for DOE's agreement was that 750 watts per assembly, as an average for PWR fuel, was reasonably close to some estimates from one particular case that the DOE looked at for a PWR spent fuel pool at end of reactor life 5 years after final shut down, which had a median of about 758 watts/assembly and a higher mean value at 791watts/assembly. This included low burnup fuel and one-cycle and two-cycle fuel discharged with the final core. It also assumed that while the reactor was operating the oldest fuel was discharged to dry storage first as needed.

Request # 2:

Regarding cost, the Statement of Work calls for detail regarding the up-front and manufacturing cask costs, the estimated costs for cask handling equipment at the shipping and receiving site, and for cost analyses regarding the trade space between the bare fuel and DFC design concepts. DOE has provided a template that includes unit costs for (among others) loading and unloading operations. To fulfill the latter request, our strategy would be to provide the essential steps in each process and develop the loading and unloading costs parametrically (e.g., total costs for comparable operations scaled appropriately (e.g. Exelon costs to load a TN-68 at Peach Bottom)). Would this approach be acceptable for DOE?

DOE Response:

The approach seems reasonable.

3.3 PHASE 3

During Phase 3, the Team focused on the work plan that was developed during Workshop # 1; with the end objective for this phase being the Initial Progress Review with DOE. Bi-weekly status calls with the DOE continued during this phase; from which a key requirement resulted:

- **Fuel Length –** Based on correspondence and discussions between the Team and the DOE, DOE proposed that for the purposes of the Task Order 17 study, the cask concepts shall be able to accommodate fuel assemblies with an assumed post-irradiation fuel assembly length of up to 180 inches without non-fuel components (NFCs). In addition, it was proposed that the cask concepts be capable of accommodating shorter length fuel assemblies containing NFCs which do not require special handling, provided the total post irradiation length (assembly with NFC) does not exceed 180 inches.

3.4 PHASE 4A

Phase 4A commenced with the second workshop, which ran from October 28-29, 2014, and was held in the Energy*Solutions* Offices, Columbia, MD. The workshop integrated the Initial Progress Review Meeting with the DOE, which took place on the first day of the workshop. The notes from the second workshop are provided in Appendix B. For the Initial Progress Review Meeting, meeting notes were issued to the DOE and due to the in-progress work presented during this meeting being subsequently advanced and presented in the main body of this report, these notes are not reproduced in Appendix B.

A key item arising from the Initial Progress Review meeting was the criticality analysis assumptions to be used for the 28 PWR DFC and the 61 BWR DFC baskets for the reconfiguration of damaged fuel, which was also applicable to the mixing of DFC cells within the PWR and BWR bare fuel baskets, i.e. a hybrid cask. Subsequent to the review meeting and following discussions during bi-weekly status calls and correspondence between the Team and DOE, DOE provided the guidance in Table 3-1 and Table 3-2 . A full discussion on the criticality analysis methodology and results is provided in Section 4.3.4.

Table 3-1. Criticality Analysis Assumptions and Approaches for addressing Bare Fuel and DFC Cask Concepts – Guidance Provided by DOE

	As-loaded		Hypothetical Accident Conditions (HAC)	
High Burnup Fuel Case	Assumption	Analysis Approach	Assumption	Design/Analysis Approach(1)
No DFCs	Fuel Intact	Analyze Intact	Fuel May Reconfigure ***or*** Fuel Remains Intact	Moderator Exclusion *or* Analyze Intact
100% of Fuel in DFCs	Fuel Intact	Analyze Intact	Fuel May Reconfigure	Moderator Exclusion ***or*** Analyze for Optimized Fuel Pin (with clad) Spacing Within Basket Cells(2)

Table 3-2. Criticality Analysis Assumptions and Approaches for Addressing Hybrid Cask Concepts – Guidance Provided by DOE.

High Burnup Fuel Case	Assumption Option Set	As-loaded		Hypothetical Accident Conditions (HAC)	
		Assumption	Analysis Approach	Assumption	Analysis Approach if Not Pursuing Moderator Exclusion(1)
Some, but not all, fuel in DFCs	Truly Damaged Fuel in DFCs in certain basket cells (e.g. around the periphery)	Damaged	Analyze Rubble	Fuel May Reconfigure	Analyze Rubble
	Undamaged High Burnup Fuel not in DFCs (Bare) in remaining basket cells	Fuel Intact	Analyze Intact	Fuel Remains Intact → Analyze Intact *or* Fuel May Reconfigure → Analyze for Optimized Fuel Pin (with clad) Spacing Within Basket Cells	

Notes:

1. For design/analysis approach taken, discuss potential licensing risks and possible ways to mitigate. More conservative assumptions may be made, but the Contractor is to avoid expending significant resources analyzing a wide variety of possible reconfiguration states.
2. Options for 100% DFC case are to design the cask to take credit for moderator exclusion or to perform criticality analyses for reconfigured fuel in DFCs under HAC assuming water moderation occurs. If pursuing the latter approach, a single reconfiguration analysis (with burnup credit-based isotopics) may be performed assuming optimized spacing of fuel pins with cladding for the reconfigured state in all basket locations/DFCs. The Contractor may choose, but is not required, to perform this analysis with the assumption that a few peripheral locations represent DFCs containing truly damaged fuel. A discussion of licensing assurance (or conversely risk) based on the cask design approach and the analysis results should be included in the Task Order 17 final report.

Another item of interest arising from the Initial Progress Review Meeting was for the Team to consider the benefits of a cask shorter than the "regular" 182 inch cavity length cask. The discussion during the second day of the workshop resulted in the identification of an option for a 171 inch cavity "short" cask, which could accommodate 80% of the PWR inventory; specifically all assemblies other than the CE 16 ×16. It was also noted that the assembly types that could be loaded into the short cask (e.g., Babcock & Wilcox (B&W) 15×15) are the heaviest and so the weights for the regular cask (182 inch cavity length) and the short cask (171 inch cavity length) should be roughly the same. During subsequent discussion with the DOE during bi-weekly status calls, other options were explored, including a 174 inch length cask, which could envelope the length of B&W 15×15 and Westinghouse 17×17 fuel (with NFC). DOE advised that extensive analyses of the 100 ton cask and the short cask options were not required, but the DOE needed to understand the benefits associated with these options and what the penalties will be compared with the 182 inch cavity length 125 ton bare fuel and DFC casks. To address these requirements, the 100 ton cask is discussed in Section 12 and the options for shorter cask lengths are discussed in Section 4.1.1.

Work performed during Phase 4A included ongoing development of the design concepts, the structural, thermal, shielding and criticality analyses, and preparation of the concept of

operations and initial cost estimates. Phase 4A concluded with the preparation and submission to DOE of a Preliminary Report (dated 12/15/14).

3.5 PHASES 4B, 5 AND 6

The work during this period of time covered addressing DOE comments on the Preliminary Report, completing the structural, thermal, shielding and criticality analyses, completing the cost estimates and capturing thoughts on special features which could improve the base designs. One item was considering the impacts of increasing the thermal limit from 24 kW to 28 kW and another was modifying the design to accommodate South Texas and AP1000 fuel assemblies. Evaluations of potential loading scenarios were also completed and the results documented (Section 8.1). The first evaluation verified that the proposed cask systems will be able to take fuel from operating plants as necessary to assure full core offload capability (without the plant having to resort to additional on-site dry storage). The second evaluation determined how many years after plant shutdown would be required to fully unload a shutdown plant's spent fuel pool, using the proposed cask systems. Phases 4B, 5 and 6 concluded with the preparation and submission to DOE of a Draft Final Report.

3.6 PHASE 7

During Phase 7, the Team addressed the DOE's comments on the Draft Final Report and issued to the DOE this Final Report and the Task Order 17 Closeout Report.

4 TRANSPORTATION PACKAGE DESCRIPTION FOR BARE FUEL AND DAMAGED FUEL

4.1 DESCRIPTION OF DESIGN CONCEPT

The proposed cask concept features a transportation cask that directly accepts intact fuel assemblies or damaged assemblies inside DFCs. General arrangement drawings for the transportation cask are provided in Appendix D.

The dimensions of the internal cask cavity are selected to accommodate the entire US PWR and BWR used nuclear fuel assembly inventory (with the exception of South Texas and AP1000 PWR assemblies), and to maximize cask payload capacity while ensuring acceptable cask exterior dose rates without requiring unacceptably long assembly cooling times prior to cask loading. The cask system is designed to accommodate any PWR or BWR fuel assembly payload that has an overall heat generation level of 24 kW or less. The overall envelope of the package (including the 128 inch diameter of the impact limiters) meets standard Association of American Railroads requirements. Details of the cask design are presented in Section 4.1.1.

The casks contain different internal baskets that accommodate PWR and BWR fuel assemblies. For both PWR and BWR assemblies, two basket designs are evaluated, including a higher-capacity basket that can accommodate bare intact fuel in most loading cells, and DFCs containing damage fuel in some basket periphery cells, and a lower-capacity basket that can accommodate DFCs containing damaged fuel in all basket loading cells. The lower capacity

baskets are evaluated to address the contingency where most of the fuel inventory is required to be placed in DFCs (due to having a burnup level over 45 GWd/MTU). Thus, a total of four cask interior basket designs, and associated assembly payloads, are evaluated. Details of the four cask interior basket designs are presented in Section 4.1.2 and the general arrangement drawings for the baskets are provided in Appendix E.

A summary of cask component weights is presented in Table 4-1. Weights are presented for each of the proposed design configurations, which include the four basket designs described above and in Section 4.1.2, and a long and short cask configuration (discussed in Section 4.1.1). The cask system is designed to be accommodated by a spent fuel pool lifting crane with a capacity of 125 tons. The majority (>75%) of US nuclear plant sites have a pool crane capacity of at least 125 tons. Alternative, lower-capacity cask system designs that can be accommodated by a pool crane capacity of 100 tons are discussed in Section 12.

4.1.1 **Transportation Cask**

The transportation cask (see Figure 4-1 and Figure 4-3) is designed to carry up to 32 PWR fuel assemblies, or 68 BWR fuel assemblies as determined by the insert (basket) designed and implemented. The materials, geometry and construction of the transportation cask are typical of that implemented in the spent fuel transportation industry today. With the exception of the neutron shield design, the transportation cask design resembles that of the NAC MAGNATRAN Package. The inner shell of the cask body is SA-240 Type 304 stainless steel. The bottom plate can be made of SA-240 Type 304 or SA-336 Type F304 stainless steel and the upper and lower forgings manufactured from SA-336 Type 304 stainless steel. The lid is made from SA-564 Type 630 (17-4PH) stainless steel, while the cask body's outer shell is manufactured from SA-240 Type XM-19 stainless steel. Lead and NS-4-FR are used to provide gamma and neutron shielding, respectively. To aid heat dissipation, copper heat fins are attached to the outer shell surface and pass through the neutron shield material terminating at the neutron shield shell.

Table 4-1. Cask Component Estimated Weights

Component	Weight (lbs.)					
	32-PWR Long[5]	32-PWR Short[6]	28-PWR Long[5]	28-PWR Short[6]	68-BWR Long[5]	61-BWR Long[5]
Cask Body	159,400	153,200	159,400	153,200	159,400	159,400
Cask Lid	10,655	10,655	10,655	10,655	10,655	10,655
Impact Limiters	19,000	19,000	19,000	19,000	19,000	19,000
Yoke	5,500	5,500	5,500	5,500	5,500	5,500
Basket	16,700	16,000	23,500	22,500	17,000	16,800
Assembly Payload[1]	48,000	55,200	42,000	48,300	48,008	43,066
Damaged Fuel Cans[2]	1,080	1,040	3,780	3,640	680	5,200
Crane Hook Weight[3]	241,335	241,595	244,835	243,795	241,243	240,621
Transport Weight[4]	254,835	255,095	258,335	257,295	254,743	254,121

Notes:

1. Calculated based on upper bound PWR and BWR assembly weights of 1,725 lbs and 706 lbs, respectively, except for the long versions of the 32-PWR and 28-PWR casks, as discussed below. The PWR and BWR assembly weights include the presence of maximum-weight inserted control components and flow channels,

respectively. For the 32-PWR and 28-PWR long configurations, the assembly payload weighs are based on a maximum weight of 1,500 pounds per assembly, which bounds the heaviest PWR fuel types (i.e., CE System 80 without control components) that are too long to fit within the short PWR casks. However, heavier PWR fuel assemblies may be permitted in the long PWR cask configurations if the site's pool crane can accommodate more than 125 tons.

2. The DFC weight estimates are based on DFCs being present in the 8 basket periphery cells of the 32P basket (only) and in the 8 basket periphery cells of the 68B basket (only), with no DFCs present in the other basket cells. For the 28P and 61B baskets, DFCs are assumed to be present in all basket cells.
3. Includes the weight of the cask body, cask lid, yoke, basket, DFCs and assembly payload. Does not include impact limiter weight.
4. Includes the weight of the cask body, cask lid, basket, DFCs, assembly payload, and impact limiters. Does not include yoke weight.
5. The long cask (also referred to as "regular") has an internal cavity length of 182″ and a maximum pre-irradiation fuel assembly length (including any inserted control components) of 178.5″.
6. The short cask has an internal cavity length of 174″ and a maximum pre-irradiation fuel assembly length (including any inserted control components) of 170.5″.

The 182 inch cavity regular transportation cask body is 202.0 inches in overall length and has an outer diameter of 85.0 inch at the upper and lower forgings with a net O.D. of 99.50 inches at the neutron shield shell. The cask cavity has a diameter of 70.0 inches and a gross cavity length of 182.0 inch with closure lid installed. The incorporation of a 2.0 inch spacer, attached to the lid, reduces the net cavity to 180.0 inches. The closure lid's main body is 10.0 inches thick and its bolt flange is 3.25 inches thick. The bottom of the cask is also 10.0 inches thick. Both the closure lid and the cask bottom utilize recessed areas where the impact limiter installation results in an effective 10.0 inches of axial shielding. The closure lid (see Figure 4-2) is attached to the cask body using forty-two, 1.5 inch diameter, high-strength nickel alloy bolts. The inner and outer shells of the cask are 1.75 inches and 2.63 inches thick, respectively. The lead gamma shielding is located between the inner and outer shells of the cask and has a length of 180.0 inches and a thickness of 3.63 inches.

The neutron shielding, NS-4-FR, is captured between the outer diameter of the cask and the neutron shield shell at an effective thickness of 7.0 inches. The neutron shield shell is 0.25 inches thick. Both the gamma shield and the neutron shield are cast in place during the construction of the cask body. Twenty four copper fins, 0.25 inches thick, are welded to the outer surface of the cask body and to the neutron shield shell to provide conductive heat dispersion from the cask body through the neutron shield.

The regular transportation cask has a target "under-the-hook" weight of 125 Tons (250,000 lbs) when loaded with the internals and fuel. In an effort to maximize the shielding for the transportation cask, it has been determined that the loading operation will include the removal of internal water prior to lifting the cask from the pool. This is an accepted operation that has been used at several sites. Measures can be taken to reduce any additional exposure that may occur as a result of the absence of the water. As such, the maximum cask body weight is restricted to 177,000 lbs based on a content (basket/fuel) weight restriction of 73,000 lbs. The current cask body, lid, spacer and lifting beam weight, for those materials described above, is just at the 177,000 lb limit. Further optimization with shielding and contents, as well as finer modeling in solids, can provide additional margin to any degree dictated.

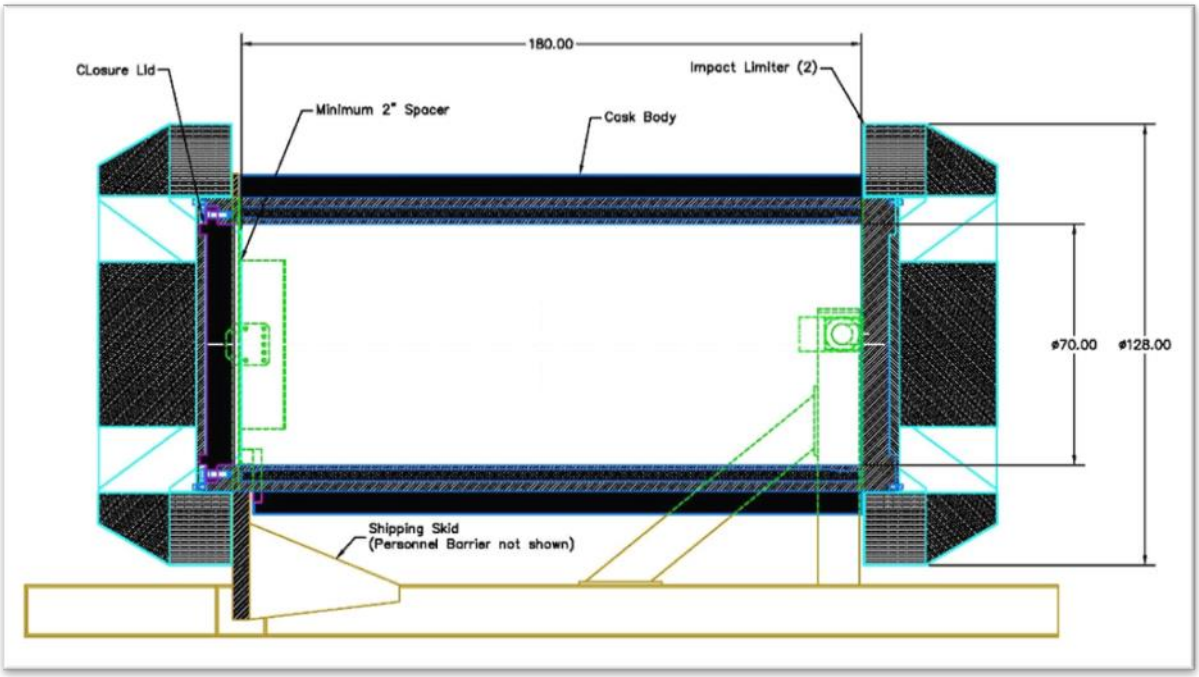

Figure 4-1. Cross-Section View of the Regular Transportation Cask

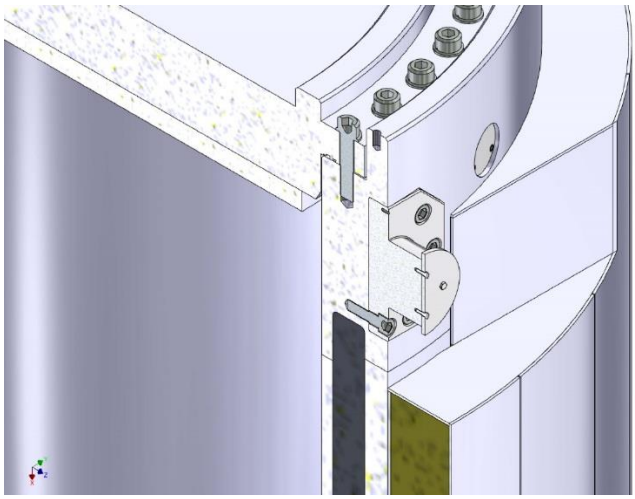

Figure 4-2. Section View Showing Attachment of the Closure Lid to the Cask Body

Incorporated into the cask body upper forging, there are two, diametrically opposed, lifting trunnion attachment points. The transportation cask utilizes removable lift trunnions such that, when removed, the upper forging is flush diametrically for interface with the upper impact limiter. This approach eliminates complexity with the design of the upper limiter as well as eliminates protrusions that would have to be addressed at impact. The cask body also has two rotation pockets incorporated into the lower neutron shield area of the cask body and are located "off-center" of the cask body axial center of gravity for assisting in the placement and rotation of the cask to a horizontal position. When the cask is rotated to the horizontal position for transport, the cask body rests on a saddle which contacts the upper forging just above the neutron

shield and remains engaged with the lower trunnion pockets. This design resists the implied loads for transport both axially and tangentially. Vertical restraint of the package is achieved with the rear trunnion pockets and a horseshoe type retainer, which is placed over the transportation package upper forging and is bolted to the cask saddle.

The transportation cask impact limiters are constructed of 0.19″ stainless shells, 0.19″ gussets and a 3″ thick mounting plate. Combination of foam and wood are utilized for crush materials. Construction of the limiter will utilize gussets and wood segmentation to ensure wood crush properties are consistent radially. The foam may be cast-in-place or custom manufactured to size for installation during the limiter construction progresses. The limiters are restricted by AAR requirements to have a maximum diameter of 128.0 inches and are approximately 48.0″ thick. As noted above, the impact limiter mounting plates are 3″ thick which provides additional axial shielding for the package in transport configuration. Each limiter is attached to the cask body forgings using twelve 1.0 inch socket head cap screws.

Lifting and handling of the transportation cask is accomplished with an industry standard type lift yoke. The lift yoke consists of a beam weldment which would be designed to be compatible with multiple crane hook design through the use of sleeves and bushings. The lift arms are closed palm, keyhole type and interface with the transportation cask removable trunnions to lift and rotate the transportation cask package both in and out of the pool as well as placement and transition onto and off of a transportation skid.

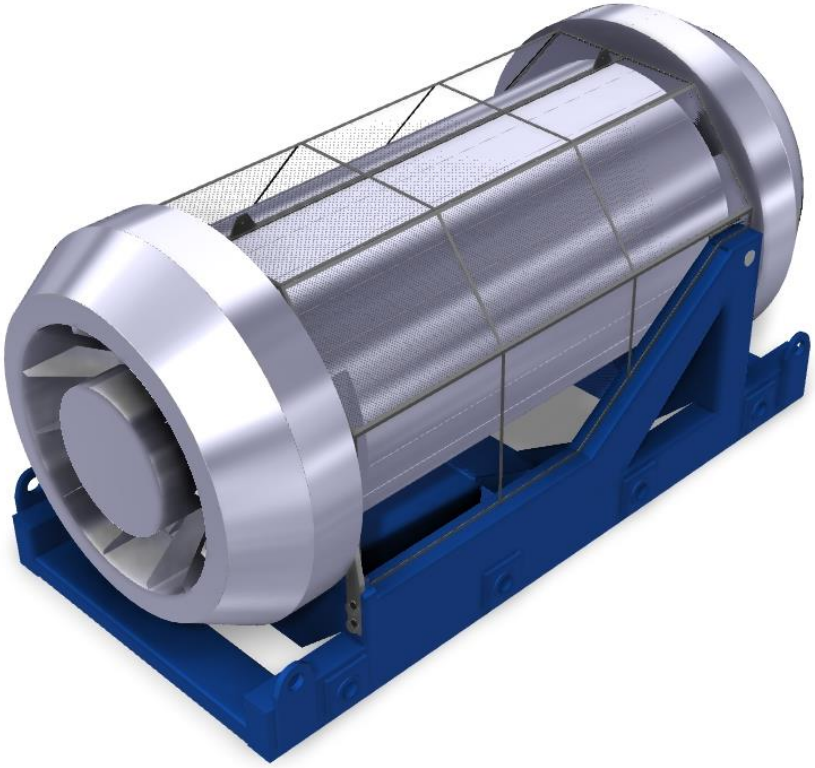

Figure 4-3. General View of Transportation Cask Mounted on Railcar Skid

The transportation cask is to be analyzed in accordance with 10 CFR 71 and ASME Section III-NB. The following sections address some initial structural analyses of the cask in the areas of lid closure, cask body structural integrity for side drops and impact limiter evaluation. Within the limits of this report, there are evaluations for both normal and accident conditions of transport. Further analysis demonstrating the structural adequacy of the transportation cask would need to be performed to fully meet regulatory requirements.

4.1.2 **Cask Internal Baskets**

Four internal basket structures are evaluated in this report. Different basket configurations are necessary to accommodate PWR and BWR fuel. For each fuel type (PWR and BWR), two basket designs are developed, one that accommodates intact fuel assemblies, and one that accommodates truly damaged fuel assemblies or high burn-up (HBU) assemblies that have been placed into DFCs.

Since the damaged fuel cans are larger than bare (intact) assemblies, they require lower-capacity baskets that have larger cell openings. The intact fuel baskets actually can accommodate a small number of DFCs in the somewhat larger cell openings that are present around the basket perimeter. The damaged fuel baskets can accommodate a DFC in every cell opening. The primary reason for evaluating baskets that can accommodate DFCs in all cell openings is to support DOE evaluations on the system impacts of pre-packaging fuel into DFCs prior to transport.

All four baskets fit inside a 70-inch diameter cask cavity. The four developed basket designs are described in the subsections below.

4.1.2.1 32-Assembly Intact PWR Fuel Basket (32P)

The 32P basket consists of a continuous fuel support structure that extends the full length of the cask cavity. The structure is essentially uniform in the axial direction. The basket structure is illustrated in Figure 4-4, which shows perspective and top end views of the basket. Key dimensions of the basket structure are listed in Table 4-2.

Each quadrant of the 32P basket contains a welded structure of 0.25-inch thick carbon steel plates which form eight square cell openings to accommodate PWR fuel assemblies. The widths of the openings vary from 9.0 inches to 9.2 inches. This creates 9.2″ × 9.2″ cell openings for eight basket periphery locations that can accommodate DFCs.

Borated aluminum angles that are 0.125 inches thick are inserted into each of the basket cell openings (as illustrated in Figure 4-4), except the eight perimeter cells that are designed to accommodate damaged fuel cans. These borated aluminum angles provide criticality control, and also enhance the basket's thermal performance. Each borated aluminum angle is inserted directly into the basket cell opening and attached to the top and bottom of the basket assembly using rivets. Slotted holes are provided in the borated aluminum angles at one end to allow free axial differential thermal expansion between the borated aluminum angles and the egg-crate walls.

The 32P basket features a 0.5 inch thick borated aluminum central cross structure that lies between the steel structures that make up the four quadrants of the basket. The cross has a criticality and heat transfer function. At the four sides of the basket edge, a thick steel plate which extends from the basket structure side to the cask cavity edge is welded to the two adjacent steel quadrant structures (see Figure 4-4). This bonds the four quadrant structures together and contains the borated aluminum center cross.

As shown in Figure 4-4, 1-inch thick steel gusset plates are welded around the periphery of the P32 basket that transfer load from the outer edges of the basket structure to the cask cavity wall. These structures do not extend the full length of the basket structure, but are axially periodic with 9-inch center-to-center spacing over most of the basket assembly length, and slightly smaller spacing at the top and bottom ends of the basket assembly. These gusset plates support the edge walls of the basket structure, thus minimizing stresses and deformations of those structures during cask drop events.

The smallest cells in the basket (i.e., the 9.0″ × 9.0″ openings in the steel structure that occur nearest the basket center) have an 8.875 inch square opening to accommodate the PWR fuel (after the 0.125 inch thick borated aluminum sheets are inserted into the cells). The 9.2 inch square openings in the structure, in the eight “corner” cells on the basket periphery, do not contain borated aluminum sheets. These cells can accommodate a DFC with an outer width of 8.97 inches, while allowing 0.23 inches of clearance, to accommodate fabrication tolerances, potential bends or twists in the DFC walls, and to allow ease of insertion. Given the DFC wall thickness of 0.0595 inches (16 gauge), an 8.97-inch DFC outer width corresponds to a DFC interior width of 8.85 inches to accommodate PWR fuel assemblies.

4.1.2.2 28-Assembly Damaged PWR Fuel Basket (28P)

As discussed above in Section 4.1.2, a lower-capacity PWR basket, with larger cell openings, is designed to allow damaged PWR fuel in DFCs to be placed into every basket cell opening. This requires a larger cell size, which results in a reduced basket capacity of 28 PWR assemblies (vs. 32 for the intact PWR assembly basket).

As with the 32P basket, the 28P basket employs a continuous fuel support structure that extends the full length of the cask cavity, and is essentially uniform in the axial direction. The basket structure is illustrated in Figure 4-5, which shows perspective and top end views of the basket. Key dimensions of the basket structure are listed in Table 4-2.

The center 16 cells of the 28P basket consist of four welded steel 2×2 sub-structures that consist of an outer box and interior cross, that are all made from 0.25 inch thick carbon steel plates. The four steel sub-structures are separated by a 0.5 inch thick borated aluminum central cross. On the four sides of the central (16 cell) structure, the four steel sub-structures are welded to together, thus forming a single steel structure that contains the central borated aluminum cross.

A 0.125 inch thick borated aluminum angle is inserted into each of the center 16 cell openings, with the poison sheets positioned toward the center of each 2×2 subassembly, providing a total of 0.25-inch thick poison material between the adjacent fuel assemblies within the 2×2 subassembly. These borated aluminum sheets, as well as the thick borated aluminum central cross, have both criticality and thermal design functions.

The steel box structure containing the 16 center cell is surrounded by four 0.5 inch thick carbon steel "bridge" plates, which transfer load from the central box to the basket periphery cells (which are offset from the center cells). A 0.5 inch thick sheet of borated aluminum lies between each bridge plate and the central box structure (which has criticality and thermal design functions).

Between the bridge plates and the cask cavity edge lie steel structures that form the outer 12 cell openings of the basket (with three cells in each quadrant). These structures are welded structures consisting of 0.5 inch thick carbon steel plates that are also welded to the bridge plates. Two borated aluminum sheets (0.125 inches thick) are fastened to two of the sides of the center cell opening of each of the four basket edge structures.

The four basket edge steel structures, which form the outer 12 basket cells, and contain the central box structure, are fastened using large bolts that fasten the ends of the bridge plates together (as illustrated in Figure 4-5. Also, stiffening plates are placed in the corners of the basket periphery (adjacent to the bolts). These plates are axially periodic, having 9-inch center-to-center spacing over most of the basket assembly length, and slightly smaller spacing at the top and bottom ends of the basket assembly.

4.1.2.3 68-Assembly Intact BWR Fuel Basket (68B)

The intact BWR assembly basket employs a "tube and disk" basket structure. Unlike the PWR basket structures, this basket structure is not axially uniform. Perspective and top end views of the basket are shown in Figure 4-6. Key dimensions of the 68B basket are listed in Table 4-2.

A series of steel disks (or "spacer plates") extend over the axial span of the cask cavity, at a uniform axial spacing of 9 inches, and slightly smaller spacing at the top and bottom ends of the basket assembly. The axial spacing is maintained by the four steel support rod assemblies illustrated in **Figure 4-6**. The interior spacer disks are constructed from 1-inch thick SA-537 Class 2 carbon steel plate, whereas the top and bottom spacer plates are constructed from 2-inch thick SA-240, Type XM-19 stainless steel. Sixty eight square holes are cut into the spacer plates. Thin-walled stainless steel guide tubes are inserted through the square holes of the interior spacer plates, and captured axially by the top and bottom spacer plates. As a result, the interior spacer plates provide lateral support to the guide tubes and fuel assemblies, whereas the top and bottom spacer plates provide axial support of the guide tubes only. The BWR assemblies will be inserted into the guide tubes. The spacer plates transfer the loads from the assemblies and guide tubes to the cask cavity wall, under a horizontal cask drop.

The interior width of the guide tubes is 5.85 inches, which allows the loading of the largest (5.52 inch) cross-section BWR assemblies, with ample room to spare to accommodate bowed or twisted assemblies. The guide tube walls are 0.0595 inches thick (16 gauge), which results in a guide tube outer width of 5.97 inches. The square holes cut into the spacer plates are somewhat wider (6.15 inches), to allow the guide tubes to be fed through the (axial) series of spacer plate holes. Finally, the spaces between the square holes (cut into the spacer plates) are 0.6 inches in width. Thus, 0.6 inch wide steel "ligaments" exist between adjacent guide tubes, which provide the support for those guide tubes. The resulting pitch between guide tubes is 6.75 inches.

The steel ligaments in the spacer plates ensure a minimum separation of 0.6 inches between guide tubes. Thus, between the spacer plates, a 0.6 inch (minimum) space exists between the guide tubes. This space is occupied by 0.375 inch thick borated aluminum plates, which provide criticality control and heat transfer out of the basket. A series of borated aluminum plates are used to create an "egg-crate" structure that fits between the guide tubes (over the axial spans between the spacer plates). Grooves are machined into the borated aluminum plates, at approximately 6.75-inch intervals, which extend over half the height of the plates. The grooves allow the plates to be slid together into an egg-create (i.e., tic-tac-toe board like) structure. This structure fits into the spaces between the guide tubes, as illustrated in **Figure 4-6**. The borated aluminum egg-crate has only criticality and thermal design functions, and provides no structural support.

Larger spacer plate cutout holes and guide tubes are provided for 8 cells around the basket edge, as shown in **Figure 4-6**. These larger cells can accommodate DFCs containing damaged BWR fuel. The DFCs have the same 5.85 inch inner width, 0.0595 inch (16 gauge) wall thickness, and 5.97 inch outer width as the standard basket guide tubes (that are used for the 60 inner cell locations). The guide tube inner width, for the 8 larger basket edge cells, is 6.2 inches, which provides a 0.23-inch diametral clearance for the inserted DFC. The larger guide tubes used in the 8 peripheral cells that accommodate DFCs also have a 0.0595-inch (16 gauge) wall thickness, which results in an outer width of 6.32 inches. The square spacer plate cutout hole width is 6.45 inches for the 8 basket edge locations that accommodate DFCs, which provides a 0.13-inch diametrical clearance for the guide tube.

4.1.2.4 61-Assembly Damaged BWR Fuel Basket (61B)

As discussed above in Section 4.1.2, a lower-capacity BWR basket, with larger cell openings, is designed to allow damaged BWR fuel in DFCs to be placed into every basket cell opening. This requires a larger cell size, which results in a reduced basket capacity of 61 BWR assemblies (vs. 68 for the intact BWR assembly basket). Perspective and top end views of the 61 assembly damaged BWR fuel basket are provided in Figure 4-7. Key dimensions of the 61B basket are listed in Table 4-2.

The 61B basket is very similar to the 68B basket described in Section 4.1.2.3, the primary difference being that a smaller number of wider (square) holes are cut into the spacer plates. The guide tubes are also wider, allowing them to accommodate DFCs containing damaged BWR fuel assemblies. The 61B spacer plate design has uniform 6.45-inch square cells, but variable ligament thicknesses. The spacer plate ligament thicknesses, working from the spacer plate centerline to the plate perimeter, are 0.65-inch, 0.60-inch, 0.55-inch, and 0.90-inch. The egg-crate structure of borated aluminum plates, that occupies the spaces between the guide tubes, is also very similar to the structure used in the 68B basket, with the same plate thickness of 0.375 inches.

The DFCs have an inner width of 5.85 inches and a wall thickness of 0.0595 inches (16 gauge). The guide tubes have an inner width of 6.2 inches and a wall thickness of 0.0595 inches (16 gauge).

4.1.3 **Damaged Fuel Cans**

DFCs are designed to accommodate damaged fuel assemblies[2] in all of the bare fuel transportation packages. Each DFC assembly is fabricated entirely from austenitic stainless steel and consists of 16-gauge (0.0595-inch thick) sheet metal formed into a square tube with a ½-inch thick fixed bottom end plate and a removable lid assembly. The top section of the DFC tube is made from thicker 8 gauge (0.165-inch thick) sheet material for greater strength and rigidity needed for the lid connection and lifting. Two opposing corners of the DFC lid assembly are fitted with steel bars (i.e.”bosses”) that are machined to form locking mechanisms for the grapple that are used for lid insertion and removal operations. The corner location of these bars avoids interference with the top end fittings and inserts for spent fuel assemblies. Both the bottom plate and lid assembly include screened holes that are designed to permit gas and fluids (water) to enter and exit the DFC internal volumes and prevent any loose fissile material from escaping the DFC. The DFC assemblies for PWR and BWR fuel are similar in design, and vary primarily in the tube size (5.85-inch square inside dimension for BWR fuel versus 8.85-inch square inside dimension for PWR fuel.) Figure 4-8 shows the top end view of a typical PWR DFC in several operation configurations, as discussed later in this section. Key dimensions of the DFCs are listed in Table 4-2.

The primary function of the DFC assembly during transportation is criticality control; the DFC confines any loose fuel pellets or fuel fragments to the volume within the DFC, thus limiting the extent of potential fuel reconfiguration for Hypothetical Accident Condition (HAC) tests. For NCT loading, it is assumed, consistent with the current NRC position, that the geometric form of damaged fuel inside DFCs is not substantially altered, as required by 10 CFR 71.55(d)(2). Under HAC, the DFC confines any loose fuel pellets or fuel fragments within its internal cavity. To satisfy the requirements of 10 CFR 71.55(d), the criticality analysis of the DFC for HAC must demonstrate that the fuel pellets and/or fragments remain subcritical in the most reactive credible configuration within the confines of the DFC cavity. Following transportation the function of the DFC assembly is to provide a means to retrieve and handle fuel assemblies after transportation, although *fuel retrievability* is not a requirement of the 10 CFR 71 regulations.

The DFC cans are pre-staged inside the specified cells of the basket prior to the fuel loading operations and a DFC lid assemblies is inserted into the top end of each DFC can (see Figure 4-8(A)) following fuel loading and prior to insertion of the transportation cask’s lid assembly. During transportation, the proximity of the DFC top end to the cask lid prevents the DFC lids from coming off the DFC body. To lift the DFC with its spent fuel assembly contents, a custom grapple assembly with two rotating dogs is lowered onto the DFC and inserted through the two corner holes in the lid (see Figure 4-8(B)) and, once engaged, the two dogs are rotated to engage the cutouts in the DFC can wall (see Figure 4-8(C)). Once the dogs are engaged with the DFC wall and locked into position, the grapple is used to lift the loaded DFC can out of the transportation cask. To remove the DFC lid assembly, the two dogs are rotated the opposite

[2] Damaged fuel is defined by the NRC’s Division of Spent Fuel Storage and Transportation, ISG-1, Revision 2 as “*any fuel rod or fuel assembly that cannot fulfill its fuel-specific or system related functions.*” Intact fuel and undamaged SNF (i.e., fuel that may be breached or have assembly defects, but can meet all fuel-specific and system related functions) is not required to be placed inside a damaged fuel can.

direction to engage pockets that are machined into the steel bars of the DFC lid assembly. Once the dogs are engaged with the DFC lid and locked into position, the grapple is used to lift the DFC lid off the DFC body (see Figure 4-8(D)).

Table 4-2. Key Basket and DFC Dimensions

Component Dimension (in.)	Basket Type			
	32P	28P	68B	61B
Minimum Cell Opening Width[1]	8.875	9.2	5.85	6.20
PWR Basket Main Structural Steel Plate Width	0.25	Varies[1]	N/A	N/A
BWR Basket Guide Tube Inner Width	N/A	N/A	5.85[2]	6.20
BWR Basket Guide Tube Wall Thickness	N/A	N/A	0.06[2,3]	0.06[2]
BWR Basket Guide Tube Outer Width	N/A	N/A	5.97[2]	6.32
BWR Basket Spacer Plate Ligament Thickness (min. guide tube spacing)	N/A	N/A	0.5	0.5
Spacer Plate / Edge Steel Axial Thickness[4]	1.00	1.00	1.00	1.00
Spacer Plate / Edge Steel Axial Spacing[4]	9.00	9.00	9.00	9.00
Borated Aluminum Plate Thickness	Varies[5]	Varies[6]	0.375	0.375
DFC Inner Width (cell opening)	8.85	8.85	5.85	5.85
DFC Wall Thickness	0.0595[3]	0.0595[3]	0.0595[3]	0.0595[3]
DFC Outer Width	8.97	8.97	5.97	5.97

Notes:

1. Most structural plates are 0.25 inches thick. Bridge plates are 0.5 inches thick. Basket edge structure plates are 0.375 inches thick. Refer to Figure 4-5.
2. The guide tube dimensions shown for the 61B basket apply for the guide tubes in the 8 periphery locations of the 68B basket.
3. 16 gauge steel.
4. For the BWR baskets, this refers to the spacer plates. For the PWR baskets, it refers to the axially-periodic steel stiffening structures around the basket edge. Refer to Figure 4-6 and Figure 4-7.
5. At a minimum, a 0.125 inch thick plate exists between all adjacent PWR assemblies. The central cross of the basket structure is 0.5 inches thick. Refer to Figure 4-4.
6. The central borated aluminum cross is 0.5 inches thick. Two 0.125 inch thick plates exist between all other adjacent cells in the 16-assembly basket center structure. A 0.25 inch plate lies between the central structure and the four basket edge structures. A single 0.125 inch thick plate lies between the adjacent cells within the basket edge structures. Refer to Figure 4-5.

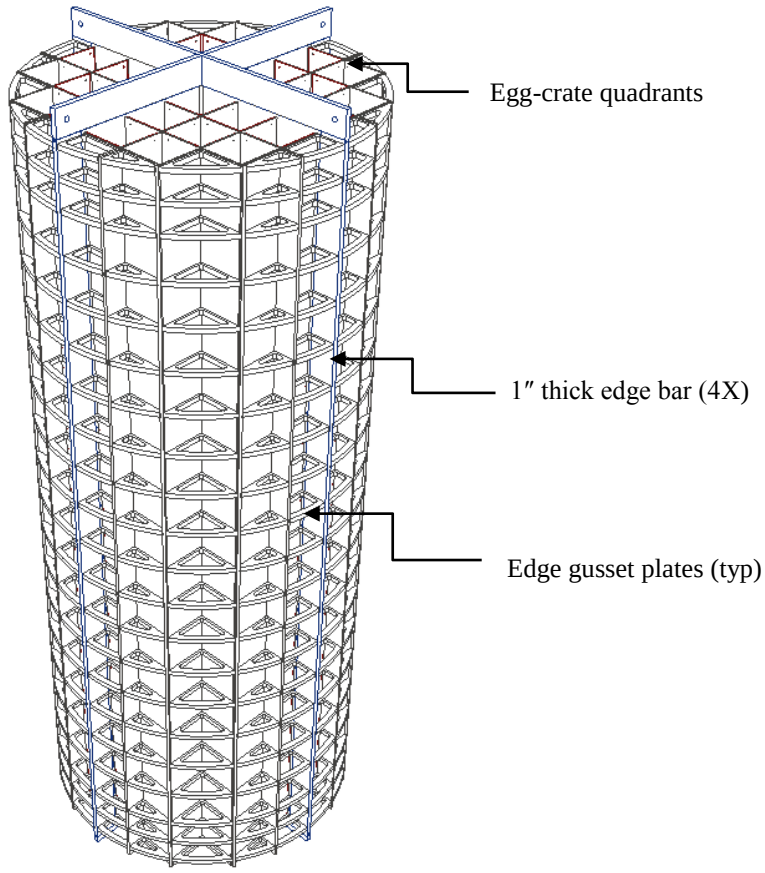

Perspective View

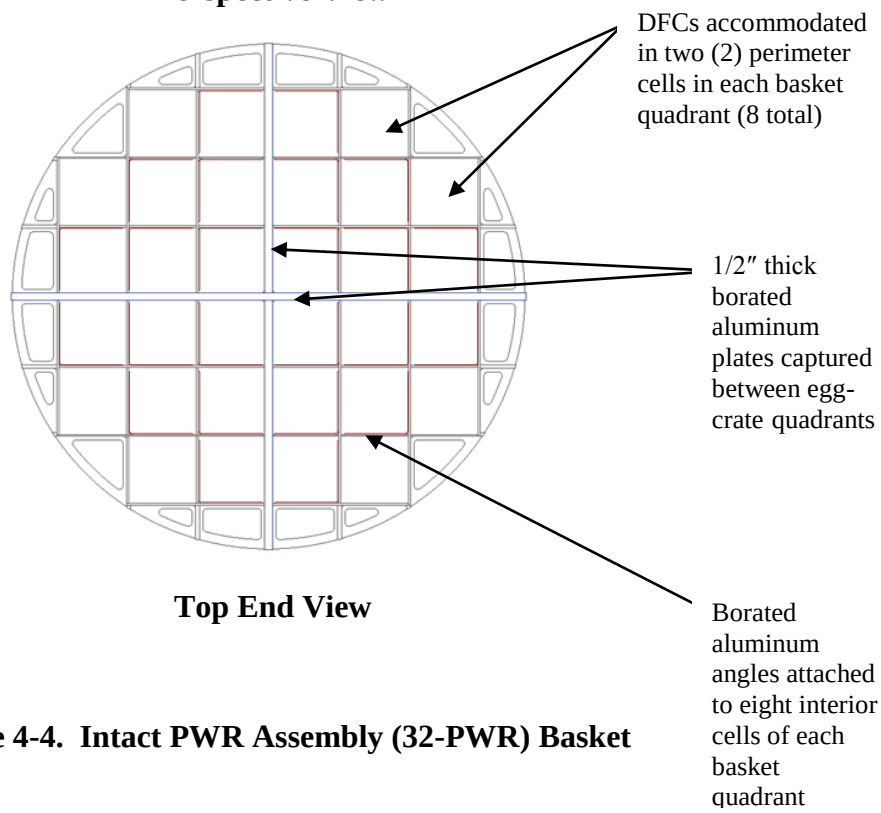

Top End View

Figure 4-4. Intact PWR Assembly (32-PWR) Basket

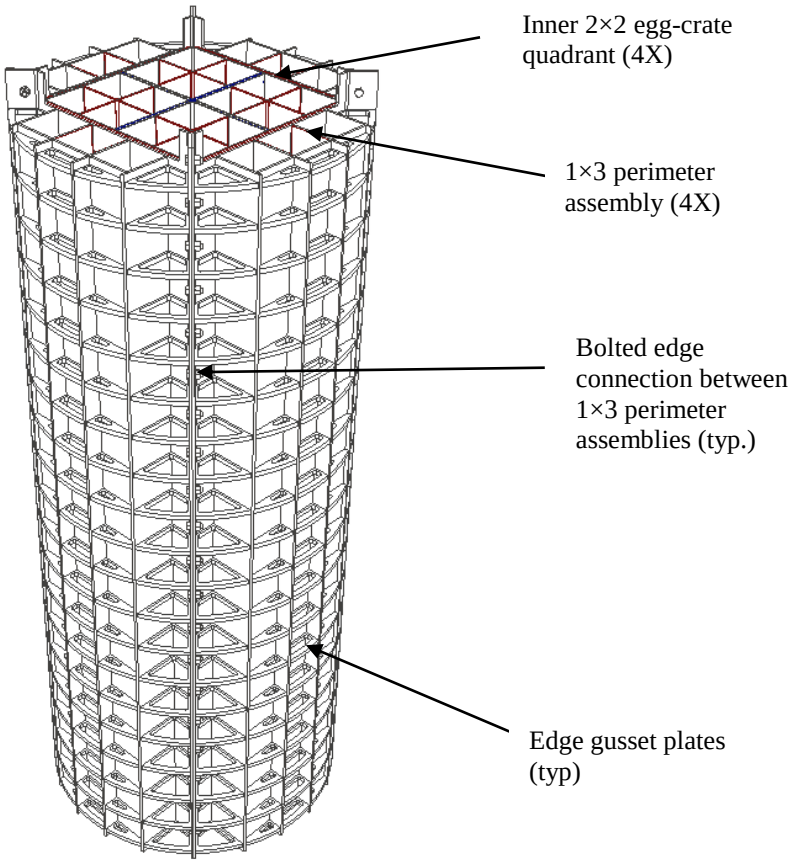

Perspective View

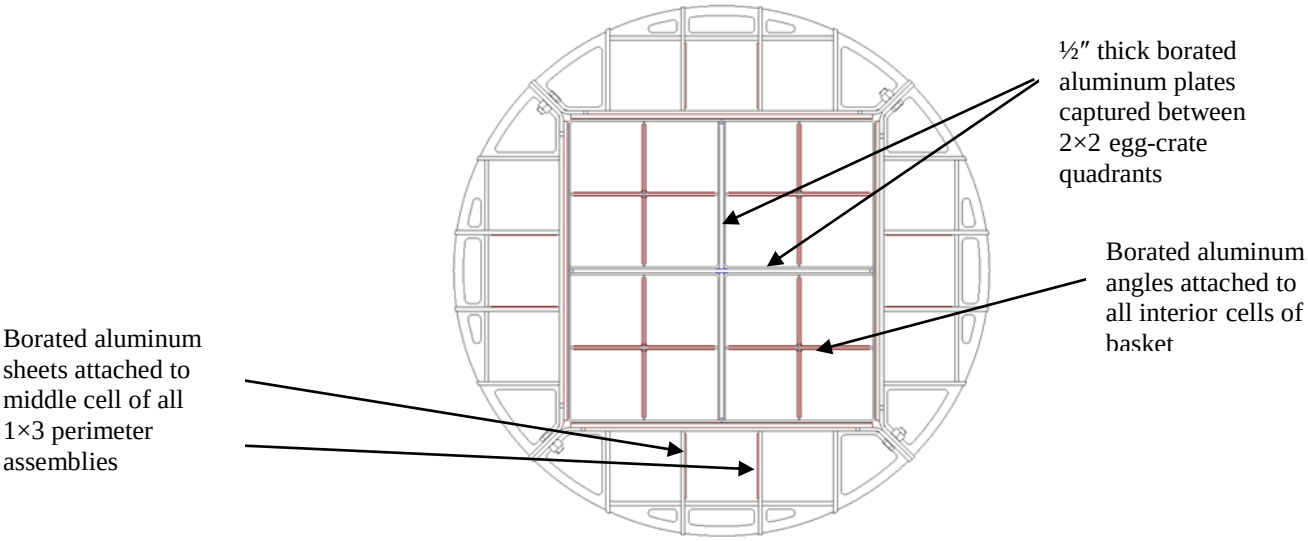

Top View

Figure 4-5. Damaged PWR Assembly (28-PWR) Basket

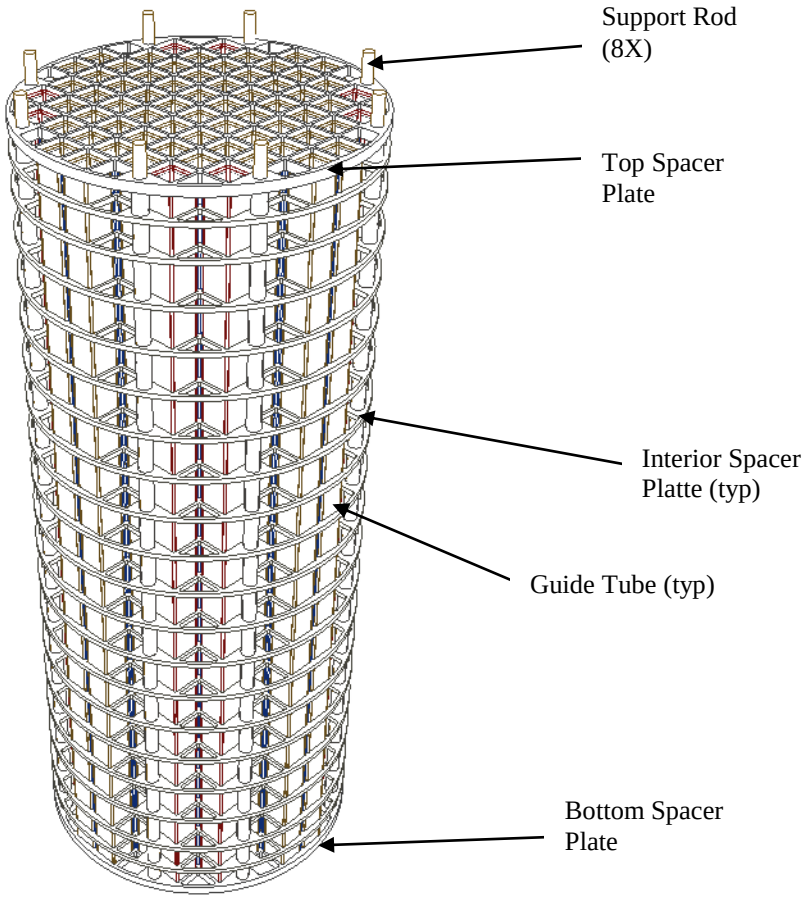

Perspective View

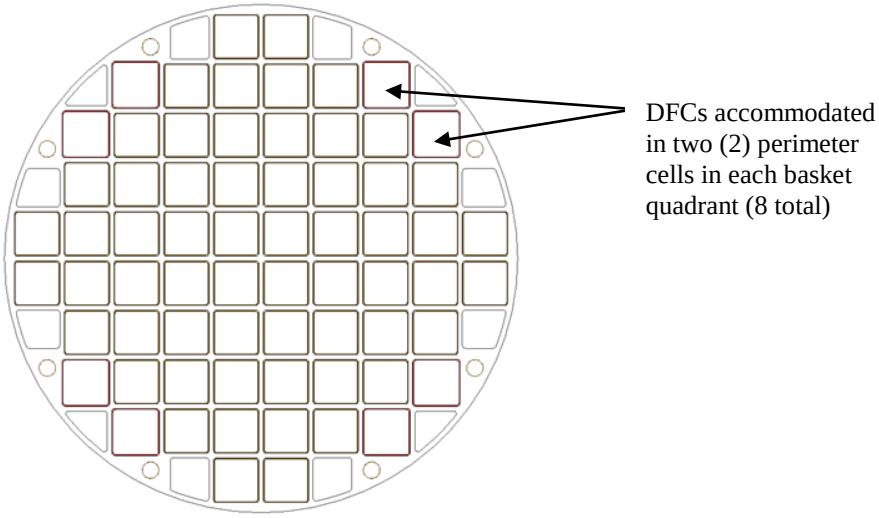

Top View

Figure 4-6. Intact BWR Assembly (68-BWR) Basket

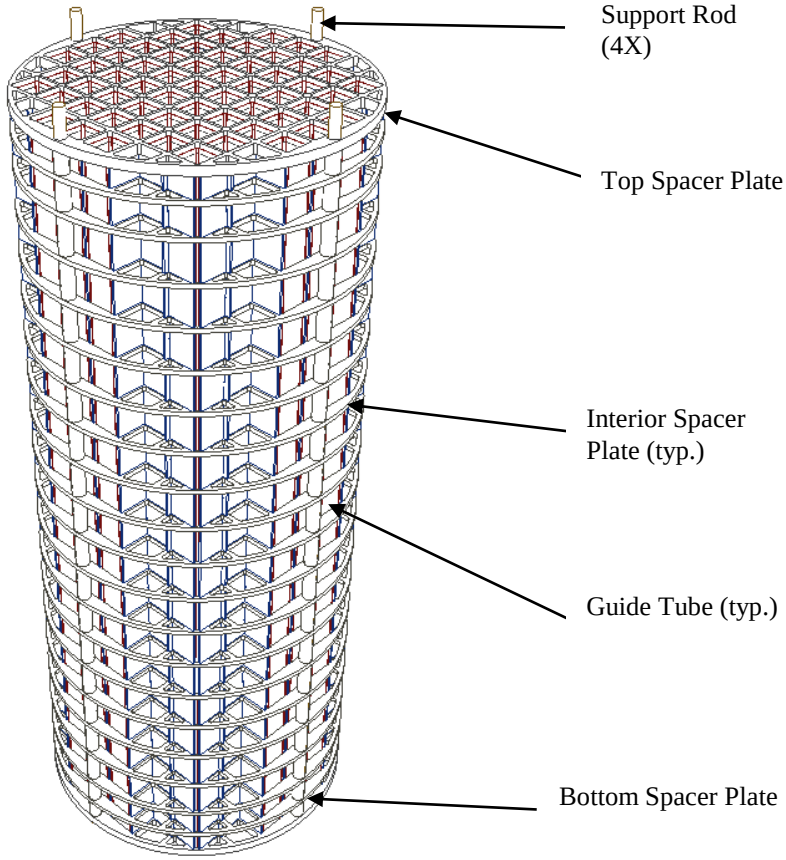

Perspective View

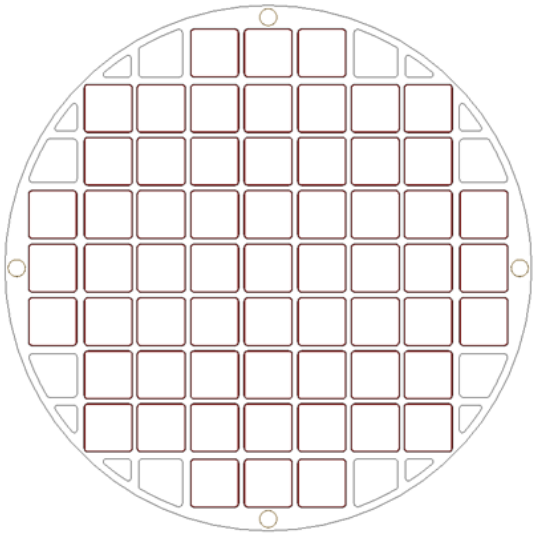

Top View

Figure 4-7. Damaged BWR Assembly (61-BWR) Basket

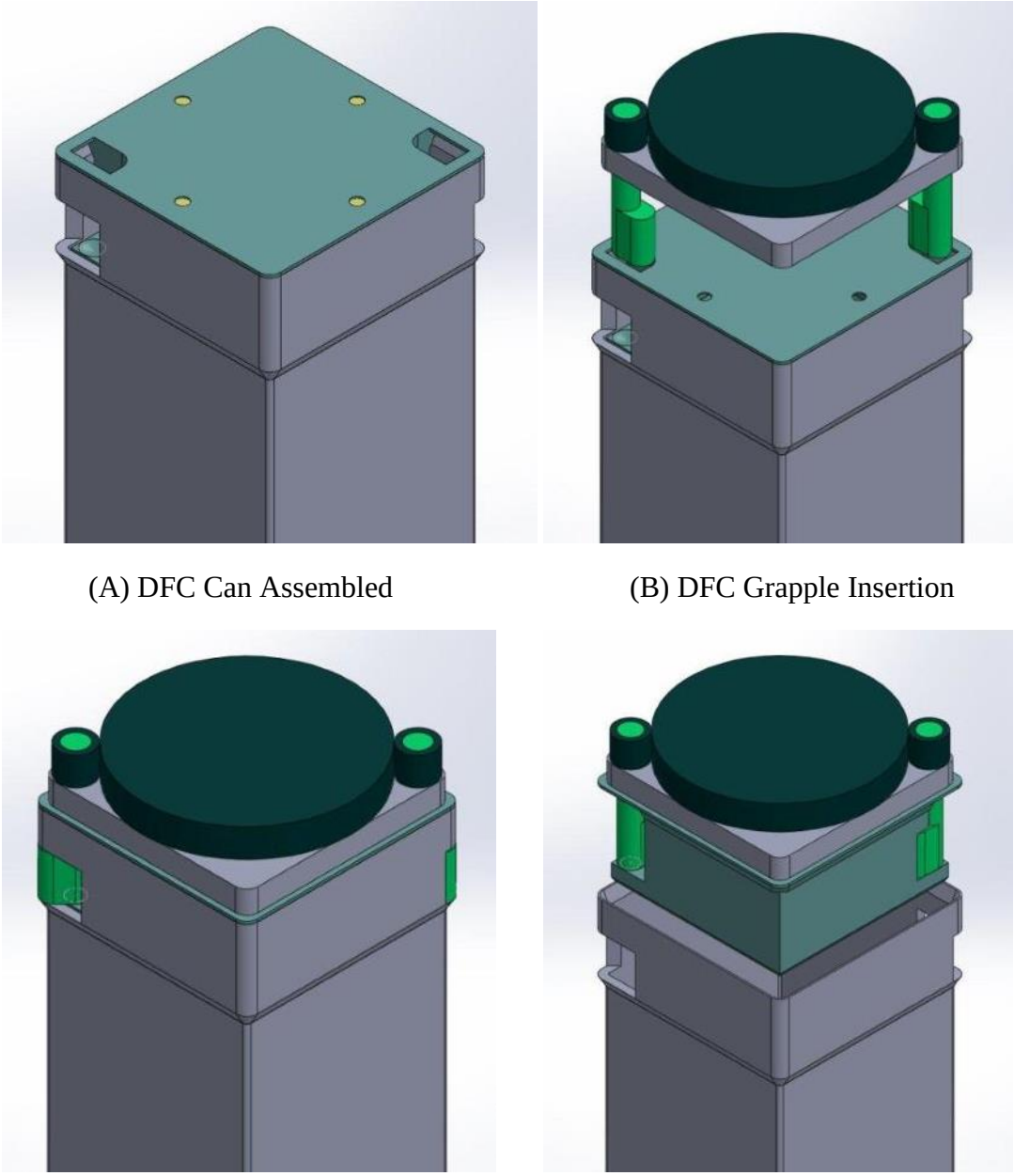

(A) DFC Can Assembled (B) DFC Grapple Insertion

(C) DFC Can Lifting (D) DFC Lid Removal

Figure 4-8. Damaged Fuel Can Assembly for PWR Fuel

4.2 PACKAGE CONTENTS

The 32-PWR and 28-PWR baskets described in Section 4.1.2 can accommodate all US PWR assembly types with the exception of South Texas assemblies, and Combustion Engineering 16×16 assemblies with inserted control components, whose lengths exceed that of the 182-inch cask cavity. The possibility of designing an extra-long cask, that can accommodate these very long fuel assemblies and weighs less than 150 tons, is discussed in Section 13.

The 32-PWR basket can accommodate damaged PWR assemblies, in DFCs, in eight loading cells that lie on the basket periphery. Only intact bare fuel may be loaded into the other 24 locations. The eight basket periphery cells may also be loaded with intact fuel. The 28-PWR basket can accommodate either intact PWR assemblies or damaged PWR assemblies in DFCs in all basket locations.

The 68-BWR and 61-BWR baskets described in Section 4.1.2 can accommodate the entire US BWR assembly inventory. Assemblies with or without flow channels can be loaded.

The 68-BWR basket can accommodate damaged BWR assemblies, in DFCs, in 8 loading cells that lie on the basket periphery. Only intact bare fuel may be loaded into the other 60 locations. The 8 basket periphery cells may also be loaded with intact fuel. The 61-BWR basket can accommodate either intact BWR assemblies or damaged BWR assemblies in DFCs in all basket locations.

Specific allowable fuel assembly parameters and dimensions are discussed in the subsections below and are summarized in Table 4-4.

4.2.1 **Allowable Dimensions**

The minimum opening for the PWR basket cells or DFCs is 8.85 inches. This is wide enough to accommodate all US PWR fuel, as the maximum US PWR assembly width is 8.54 inches.[3] The 5.85 inch minimum cell opening width for the BWR basket cells or DFCs is wide enough to accommodate all US BWR fuel, as the maximum US BWR assembly width is 5.52 inches.[1]

As discussed in Section 4.1.1, there are two cask cavity lengths, 182 inches and 174 inches (for the “long” and “short” casks, respectively). Assembly hardware with significant activation must not be present in the top two inches of the cask cavity, as that region lies above the top of the radial lead shield (and unacceptable gamma streaming over the top of the lead shield would result). The tops of inserted control rod assemblies (CRAs) (which are not exposed to significant neutron fluence during reactor operation) and DFC top hardware may extend into the top two inches of the cask cavity.

Thus, with the exception of assemblies containing CRAs, assemblies loaded into the “long” and “short” casks must not exceed 180 inches and 172 inches in length, respectively, after accounting for assembly thermal and irradiation growth. A margin of approximately 1.5 inches should be enough to account for the effects of assembly thermal and irradiation growth, so the casks can accommodate nominal, pre-irradiation assembly lengths (including any inserted control components) of 178.5 and 170.5 inches, for the “long” and “short” casks, respectively.

The maximum lengths for US PWR and BWR fuel assemblies (with the exception of South Texas fuel and CE 16×16 fuel with control components) are 178.3 and 176.2, respectively.[1] Thus, all such PWR and BWR fuel can be shipped in the “long” cask, as long as the overall cask system weight does not exceed the crane capacity available at the power plant. If 1.5 inches is

[3] MAGNATRAN Transport Cask SAR, Revision 12A, October 2012, NRC Docket No. 71-9356, NAC International.

not sufficient to account for both thermal and irradiation growth, then minor modifications to the cask may be necessary to accommodate the longest assembly, i.e., the 178.3 inch long CE 16x16 System 80 assembly. The cask cavity length could be lengthened slightly, or the top nozzle of that assembly could be allowed to extend slightly into the upper two inches of the cask cavity (which may require the addition of local shielding in the vicinity of the cavity top corner).

With a maximum allowable nominal (pre-irradiation) assembly height of 170.5 inches, the "short" cask can accommodate all US PWR fuel, with the exception of CE 16×16 fuel, with or without inserted control components. Most US BWR assemblies cannot be loaded into the "short" cask.

B&W 15×15 assemblies with inserted CRAs are longer than 170.5 inches but are shorter than 172.5 inches. Thus, they will fit into the "short" cask cavity, but the head of the CRA will extend into the top two inches of the cavity. This is acceptable since CRA heads do not have significant activation. The only potential issue is that a B&W 15×15 assembly with a CRA insert will be too long to place inside a DFC. Thus, if a B&W 15×15 assembly is damaged, any CRA inserts must be removed before placing the assembly in a DFC. (If using the "long" cask, a B&W 15×15 assembly with a CRA insert may be placed into a DFC). B&W 15×15 assemblies with any other type of control insert are less than 170 inches long, and can therefore be loaded into the "short" cask (even if they are placed within a DFC).

4.2.2 **Allowable Assembly Weights**

The Section 4.3.1 structural evaluations cover PWR and BWR assembly weights of up to 1725 lbs and 706 lbs, respectively. Thus, individual assemblies with weights equal to or lower than those values may be loaded. Note that the weight of any inserted control components must be included in the overall assembly weight.

The only other restriction is that the overall weight of the cask, the internal basket structure, the fuel assembly payload, the yoke, and any water within the cask cavity must not exceed the capacity of the crane at the plant. As discussed in Section 4.1, the weight of the cask, basket and yoke is such that full payloads, for all four basket types, at the maximum assembly weights given above, can be accommodated by a 125 ton plant crane. Note that this assumes that all of the cask cavity water is pumped out before lifting the cask out of the pool, in order to reduce weight. The cask cavity water (which weighs approximately 15,000 lbs) need not be pumped out if the plant's crane capacity can accommodate the additional weight.

Note that loading the maximum allowable PWR assembly weight of 1725 lbs. will not be possible with a 125 ton plant crane unless the "short" cask discussed in Sections 4.1.1 and 4.2.1 is used. For the "long" cask, the PWR assembly weight (including any control component inserts) must not average more than approximately 1,500 lbs., if the overall hook weight is to be kept under 125 tons. Fortunately, the heaviest US PWR assemblies (e.g., B&W and Westinghouse assemblies) can be loaded into the "short" cask, as discussed above in Section 4.2.1. The only assemblies that are too long to be loaded into the "short" cask (other than South Texas and AP1000 assemblies) are CE 16×16 assemblies, whose weight is only 1,430 lbs (i.e., well under 1,500 lbs). CE 16×16 assemblies will not be shipped with control inserts. Thus, all US PWR assembly (excluding AP1000 and South Texas) can be loaded, to full basket capacity, with a crane capacity of 125 tons.

4.2.3 **Radiological and Thermal Constraints**

The shielding and thermal evaluations, presented in Sections 4.3.3 and 4.3.2 respectively, demonstrate that cask payloads with an overall heat generation level of 24 kW or less may be shipped. The same overall payload heat generation limit also applies for the 28P and 61B DFC baskets.

Assemblies loaded in the periphery cells of the baskets may not have per-MTU fuel heat generation levels in excess of 1.8 kW/MTU for PWR fuel and 2.0 kW/MTU for BWR fuel (which corresponds to per-assembly heat generation limits ranging from 0.65 kW/assembly to 0.85 kW/assembly for PWR fuel and from 0.35 kW/assembly to 0.42 kW/assembly for BWR fuel, depending on assembly uranium loading). This requirement is necessary to keep cask exterior dose rates within regulatory limits. For the interior cells of the basket, any assembly with a burnup level up to 62.5 GWd/MTU, a cooling time of at least 5 years, and a heat generation level up 2.0 kW/assembly for PWR or 0.85 kW/assembly for BWR may be loaded. (These are the limiting parameters evaluated in the basket thermal and shielding analyses.) Note that the overall payload thermal limit of 24 kW may not allow the loading of 2.0 kW PWR assemblies or 0.85 kW BWR assemblies in all non-periphery cells of the basket (as discussed below).

With respect to the shielding related requirement for “periphery” basket cells discussed above, a periphery cell is any cell that has a face or corner that is adjacent to the basket exterior. The 32P basket has 20 periphery cells and 12 interior cells. The 28P basket also has 12 interior cells, but only has 16 periphery cells. The 68B basket has 36 periphery cells and 32 interior cells. The 61B basket has 32 periphery cells and 29 interior cells.

Assemblies that exceed the per-MTU limits discussed above, such as 62.5 GWd/MTU, 5 year cooled assemblies, must be placed into basket interior cells. Thus, the 32P, 28P, 68B and 61B baskets can contain no more than 12, 12, 32 and 29 such assemblies, respectively. The PWR baskets could accommodate twelve 62.5 GWd/MTU, 5 year cooled assemblies (that have heat generation levels of almost 2.0 kW/assembly), but only if all the remaining basket cells are left empty of spent fuel or are loaded with assemblies that have negligible heat generation. For the BWR baskets, the overall payload heat generation limit of 24 kW would only allow the loading of 28 BWR assemblies with the maximum allowable heat generation of 0.85 kW/assembly, even if all the periphery cells were left empty. To fully load all interior basket slots, the BWR assembly heat generation levels could be no more than 0.75 kW/assembly for the 68B basket, and no more than 0.828 kW/assembly for the 61B basket. Some BWR assemblies with 62.5 a GWd/MTU burnup level and a cooling time of 5 years may meet these (lower) heat generation level requirements, based on their uranium loading and initial enrichment.

The maximum quantities of 62.5 GWd/MTU, 5 year cooled assemblies that may be loaded into the baskets, discussed above, are predicated on leaving all the remaining basket cells empty of spent fuel. To allow the loading of assemblies in other locations, the quantity of 62.5 GWd/MTU, 5 year cooled assemblies in the basket will have to be reduced. The governing constraint is that the total heat generation of the payload may not exceed 24 kW.

4.2.4 **Criticality Constraints**

4.2.4.1 PWR Assemblies

During licensing, the 32P and 28P baskets will be qualified based on burnup-credit criticality analyses, which determine maximum allowable initial enrichment as a function of assembly burnup. Mathematical formulas that determine the maximum allowable initial enrichment, as a function of assembly burnup, for the major US PWR assembly types, are shown in Table 4-3.

The presented formulas were determined for the MAGNATRAN transport cask using detailed burnup-credit licensing analyses. Criticality analyses presented in Section 4.3.4 of this report demonstrate that for intact PWR fuel, the 32P and 28P baskets are less reactive than the MAGNATRAN cask system. Thus, the formulas presented in Table 4-3 are applicable for both the 32P and 28P baskets (for intact fuel).

The center 24 cells of the 32P basket must contain bare, intact PWR assemblies. Those (center) cells do not have room to accommodate a DFC. The eight cell locations around the basket periphery may contain a bare intact assembly or a DFC containing a damaged PWR assembly. The edge locations could also contain a DFC containing an intact assembly (which could be used if assembly damage or reconfiguration under HAC were anticipated). All 28 cells of the 28P basket may contain either an intact assembly or a (intact or damaged) PWR assembly inside a DFC.

The modeled intact and damaged PWR assembly configurations that are the basis of Table 4-3 results are described in Section 4.3.4. Additional criticality analyses, which model alternative assembly configurations to evaluate various contingencies that may arise during cask system licensing, are also presented in Section 4.3.4. The results (i.e., allowable initial enrichment vs. burnup values) of those alternative analyses, which differ from those presented in Table 4-3, are presented and discussed in Section 4.3.4.

As discussed in Section 4.3.4, the results shown in Table 4-3 are actually conservative for the evaluated 32P and 28P basket and payload configurations described above. When detailed burnup-credit criticality analyses are performed on those configurations, as part of the cask system licensing process, higher allowable initial enrichment levels (for a given assembly burnup level) are expected. As shown in Figure 4-50 and discussed in Section 4.3.4, the results shown in Table 4-3 accommodate the great majority of the US PWR inventory; the 32P and 28P baskets are expected to be able to accommodate an even larger fraction of the US PWR inventory. Insertion of CRAs into under-burned assemblies and the use of partially-loaded baskets (where a few cells are left empty of spent fuel) will allow the baskets to accommodate the entire US PWR fuel inventory, with respect to criticality requirements.

4.2.4.2 BWR Assemblies

The Section 4.3.4 criticality evaluations show that BWR fuel assemblies with peak planar average initial U-235 enrichment values up to 5.0% can be loaded all locations of either the 68B or 61B baskets.

Bare intact BWR assemblies, with or without a flow channel, can be loaded into the center 60 cells of the 68B basket. DFCs may not be loaded into the center 52 cells because these cells are not large enough to accommodate DFCs. The 8 cells on the periphery of the 68B basket may be loaded with bare intact BWR assemblies or BWR assemblies (damaged or undamaged) inside DFCs. All 61 cells of the 61B basket may be loaded with bare intact BWR assemblies or BWR assemblies (damaged or undamaged) inside DFCs. BWR assemblies inside DFCs may or may not have a flow channel.

The modeled intact and damaged BWR assembly configurations that are the basis of the above results are described in Section 4.3.4. Additional criticality analyses, which model alternative assembly configurations to evaluate various contingencies that may arise during cask system licensing, are also presented in Section 4.3.4. The corresponding maximum allowable initial enrichment levels, which are less than 5.0% in some cases, are presented and discussed in Section 4.3.4.

Table 4-3. PWR Fuel Allowable Initial Enrichment vs Burnup for 32P and 28P Baskets

Assembly ID	Zero (0) Burnup Max. Enr. (wt %)	Max Initial Enrichment (wt% ^{235}U) = C_4 × Burnup (GWd/MTU) + C_5					
		Burnup (GWd/MTU) < 18		18 ≤ Burnup (GWd/MTU) ≤ 30		Burnup (GWd/MTU) > 30	
		C_4	C_5	C_4	C_5	C_4	C_5
BW 15 × 15	1.9	0.0501	1.69	0.0693	1.65	0.0748	1.60
BW 17 × 17	1.9	0.0502	1.72	0.0687	1.70	0.0742	1.66
CE 14 × 14	2.1	0.0473	2.04	0.0675	2.03	0.0759	1.93
CE 16 × 16	2.1	0.0464	2.03	0.0657	2.06	0.0733	1.99
WE 14 × 14	2.2	0.0496	2.08	0.0672	2.21	0.0725	2.29
WE 15 × 15	1.9	0.0494	1.74	0.0683	1.72	0.0742	1.67
WE 17 × 17	1.9	0.0494	1.71	0.0685	1.68	0.0749	1.61

Table 4-4. Fuel Loading Specifications

	32P	28P	68B	61B
Overall Assembly Length (in.)[1,2]	≤ 178.5	≤ 178.5	≤ 178.5	≤ 178.5
Assembly Width (in.)	≤ 8.6	≤ 8.6	≤ 5.6	≤ 5.6
Overall Assembly Weight (lbs)[3]	≤ 1,725[8]	≤ 1,725[8]	≤ 706	≤ 706
No. of Damaged Fuel Cans[4]	≤ 8	≤ 28	≤ 16	≤ 61
Overall Payload Heat Generation (kW)	≤ 24	≤ 24	≤ 24	≤ 24
Basket Periphery Fuel Heat Gen (kW/MTU)[5]	≤ 1.8	≤ 1.8	≤ 2.0	≤ 2.0
Maximum Assembly Heat Generation (kW)	≤ 2.0	≤ 2.0	≤ 0.85	≤ 0.85
Basket Periphery Assembly Heat Gen (kW)[6]	≤0.85	≤0.85	≤0.40	≤0.40
Assembly Burnup (GWd/MTU)	≤ 62.5	≤ 62.5	≤ 62.5	≤ 62.5
Assembly Cooling Time (yr.)	≥ 5	≥ 5	≥ 5	≥ 5
Initial Enrichment (w/o U-235)[7]	Varies[9]	Varies[9]	≤ 5	≤ 5

Notes:

1. Nominal, pre-irradiation-growth length including any inserted control components.
2. The presented lengths apply for the "long" cask configuration. Assemblies must be ≤ 170.5 inches long to be loaded into the "short" cask configuration. Bare assemblies (not in a DFC) with inserted CRAs may be up to 180.5 and 172.5 inches long, for the "long" and "short" cask configurations, respectively.
3. Including any inserted control components (PWR) or flow channels (BWR).
4. DFCs may only be loaded into eight periphery slots of the 32P basket and 16 periphery slots of the 68B basket (see Figure 4-4 and Figure 4-6, respectively). Damaged assemblies must be placed in DFCs. For all basket types, DFCs containing damaged fuel must be placed into basket periphery slots (including the eight periphery slots in the 28P basket and the 12 periphery slots in the 61B basket, as shown in Figure 4-5 and Figure 4-7, respectively). DFCs containing initially undamaged fuel (e.g., high burnup fuel) may be placed into any of the slots in the 28P and 61B baskets.
5. Basket periphery assemblies refers to the assemblies loaded in the outer 20 cells of the 32P basket, the outer 16 cells of the 28P basket, the outer 36 cells of the 68B basket, or the outer 32 cells of the 61B basket. PWR fuel assemblies with fuel heat generation levels over 1.8 kW/MTU and BWR fuel assemblies with fuel heat generation levels over 2.0 kW/MTU may not be loaded into basket periphery cells
6. Note that the fuel kW/MTU limit may limit periphery assembly heat generation levels to lower values than those shown, especially for assemblies with lower uranium loadings (MTU/assembly).
7. Limits refer to maximum planar average initial enrichment (at any axial elevation).
8. Loading a full payload of PWR assemblies with an overall weight (including any inserted control componeents) of more than 1,500 lbs (each) will result in an overall pool crane hook weight in excess of 125 tons if the long cask described in Section 4.1 is used.
9. Maximum allowable PWR initial U-235 enrichment varies with assembly burnup, as shown in Table 4-3.

4.3 DESIGN AND ANALYSIS APPROACH

4.3.1 **Structural Analyses**

4.3.1.1 Transportation Cask Structural Analysis

This section includes the following structural analyses and evaluations of the transportation cask:

- Closure Analysis
- Cask Lid Bolt Preload
- Bolt Thread Evaluation

- Bolt Fatigue Evaluation
- Bolt Bearing Load
- Closure Lid Deformation
- Pin Puncture Evaluation
- Impact Analysis
    - End Drop
    - Side Drop
    - Corner Drop and
- Lifting and Tie-Down Analysis

4.3.1.1.1 *Closure Analysis*

The transportation cask closure lid and the lid bolts are required to satisfy two criteria: (1) calculated maximum stresses must be less than the allowable stress limit (the material yield strength is conservatively selected); and (2) lid deformation or rotation at the O-rings must be less than the elastic rebound of the O-rings. Using consistently conservative assumptions, the NUREG/CR6007 analysis of the cask closure system demonstrates that the cask closure assembly satisfies the performance and structural integrity requirements of 10 CFR 71.71(c)(7) for NCT. The NUREG/CR-6007 analysis is summarized in the following paragraphs.

NUREG/CR-6007 provides formulas for calculating bolt forces generated by all regulatory (normal and hypothetical accident) transportation loading. Specifically, the report deals with the bolt stress analysis of a circular, cylindrical cask with a flat, circular closure lid.

To ensure positive closure, the cask has forty two 1-1/2–8 UN–2A 12-point flanged head bolts fabricated from SB-637, grade N07718 material. Material properties used for analytical assessment are based on an estimated 300°F for the cask lid, closure bolts and cask wall. For evaluation purposes, a maximum internal pressure of 135 psi is used.

Cask body impact accelerations used in analysis are based on completed impact limiter analysis for hypothetical accident (30’ drop) and normal (1’ drop) conditions of transport. As the scope of this report does not provide full evaluations of the impact limiters, most cases will assume the bounding analysis to be the HAC and accelerations of 40g end drop and 60g side drop. If any normal condition evaluations are performed, an acceleration of 20g (1-ft drop) is taken to be the worst case. A factor of 1.1 is applied for dynamic loads.

4.3.1.1.2 *Cask Lid Bolt Preload*

The following calculations follow a NUREG/CR-6007 evaluation and result in a calculated maximum installed preload of 121,519 lb/bolt. The preload on the cask lid closure bolt performance considers the following factors: (1) an internal pressure force on the inner lid of 135 psi; (2) the O-ring compression force; and (3) the inertial weight of the lid, basket and fuel due to the 30-ft accident end drop conditions (considering a bounding 40g acceleration for end and corner drop accident conditions). Although the closure bolts have a greater coefficient of thermal expansion than the lid flange material, (i.e., as the temperatures of the lid flange and closure bolts increase from their thermal stress-free condition of 70°F to their maximum temperatures associated with the hot condition, the bolts expand more than the lid flange,

resulting in relief of a portion of the initial bolt preload) this level of detail is not addressed at this time.

The following considerations were the basis of the conservative preload of 121,519 pounds/bolt, derived from the calculation below, for the cask lid closure bolts.

The cask lid bolts are preloaded to insure the integrity of the cask seals. In calculating the required preload for the cask lid closure bolts, the following factors are considered:

- Estimated Internal pressure on cask lid – 135 psig
- O-ring compression force
  - 50 lb/in (elastomeric, outer)
  - 50 lb/in (elastomeric, inner)
- Weight of cask lid – 10,850 lb
- Bounding Weight of Fuel – 53,760 lb
- Bounding Weight of Basket – 19,240 lb
- End drop accident acceleration – 40g (assumed for bolt closure analysis)

The load per bolt due to internal pressure, F_P, is:

$$F_P = \frac{P_{max}}{N_b}\left(\frac{\pi D_i^2}{4}\right) = 12{,}810 \text{ lb ---}$$

where:

P_{max} = 135 psig	Maximum internal cask pressure
D = 71.236 in	Inner O-ring diameter
N_b = 42	Number of bolts

The load per bolt due to O-ring compression force, F_O, is:

$$F_O = \frac{C_F \pi D_o + C_{F2} \pi D_i}{N_b} = 537 \text{ lb}$$

where:

C_{F2} = 50 lb/in	Inner O-ring compression force
C_F = 50 lb/in	Outer O-ring compression force
D_i = 71.236 in	Inner O-ring diameter
D_o = 72.236 in	Outer O-ring diameter
N_b = 42	Number of bolts

The load per bolt due to inertial loads, F_I, is:

$$F_I = \frac{(W_{lid} + W_{fuel} + W_{basket})G\ DLF}{N_b} = 87{,}476 \text{ lb}$$

where:

W_{lid}	=	10,500 lb	Cask lid weight
W_{fuel}	=	53,760 lb	Maximum fuel weight
W_{basket}	=	19,240 lb	Basket weight
G	=	40g	End drop acceleration
N_b	=	42	Number of bolts
DLF	=	1.1	Dynamic load factor

Therefore, the minimum required bolt preload, F_{Bolt}, is:

$$F_{Bolt} = F_P + F_O + F_I = 100{,}823 \text{ lb}$$

The torque required to generate the minimum required bolt preload is calculated as follows.

$$T = F_{Bolt}kd = 23{,}895 \text{ in-lb} \div 12 \text{ in/ft} = 1{,}991 \text{ ft-lb}$$

where:

F_{Bolt}	=	100,823 lb	Bolt load
d	=	1.5 in	Bolt diameter
k	=	0.158	Torque Coefficient or Nut factor

For the transportation cask, the bolt torque should be specified as 2,200 ± 200 ft-lb.

Therefore bolt preload force for the maximum torque is:

$$F_{maxT} = \frac{T}{kd} = \frac{2{,}400 \times 12}{(0.158 \times 1.5)} = 121{,}519 \text{ lb}$$

4.3.1.1.3 *Cask Lid Bolt Thread Evaluation*

For a maximum closure lid bolt load of 121,519 lb, the bolt threads are evaluated according to the methodology presented in Machinery's Handbook. The following equations are required to calculate thread areas for tensile and shear.

$$A_t = 3.1416\left(\frac{E_{s\,min}}{2} - \frac{0.16238}{n}\right)^2 = 1.4713 \text{ in}^2$$

$$A_s = 3.1416nL_eK_{n\,max}\left[\frac{1}{2n} + 0.57735(E_{s\,min} - K_{n\,max})\right] = 5.454 \text{ in}^2$$

$$A_n = 3.1416nL_eD_{s\,min}\left[\frac{1}{2n} + 0.57735(D_{s\,min} - E_{n\,max})\right] = 7.4238 \text{ in}^2$$

where:

d	=	1.5 in	Bolt Diameter
n	=	8	Threads per inch
L_e	=	2.12 in	Thread length of engagement
K_{nmax}	=	1.390 in	Maximum minor diameter of internal thread
E_{nmax}	=	1.4283 in	Maximum pitch diameter of internal thread
E_{smin}	=	1.4093 in	Minimum pitch diameter of external thread
D_{smin}	=	1.4828 in	Minimum major diameter of external thread

The total load on the bolt is:

$$S_t = \frac{P}{A_t} = \frac{121{,}519}{1.4713} = 82{,}593 \text{ psi} = 82.6 \text{ ksi}$$

where:

P = 121,519 lbs maximum bolt load

The factor of safety against bolt failure in tension is:

$$FS = \frac{0.7S_u}{S_t} = \frac{0.7(173.5)}{82.6} = 1.47$$

where:

S_u = 173.5 ksi Ultimate strength, SB-637 Grade N07718, 300°F

The closure lid bolts are threaded into the top forging. The top forging material is SA336 Type 304 stainless steel which has a lower tensile strength than the bolt material, i.e., SB637 Grade N07718. If mating internal and external threads are manufactured of materials having equal strength, the length of engagement (Le) required to ensure that the threads will not strip is calculated using the below formula. In this formula the factor of 2 is used to ensure that the shear area of the thread is twice the tensile-stress area so that the full strength of the thread is ensured despite the difference in tensile strength between bolt and lid materials. This value is slightly larger than required and thus provides a small additional factor of safety against stripping.

$$L_e = \frac{2A_t}{3.1416(K_{n\,max})\left[\frac{1}{2} + 0.57735(n)(E_{s\,min} - K_{n\,max})\right]} = 1.14 \text{ in}$$

where:

K_{nmax} = 1.390

E_{smin} = 1.4093

n = 8

Since the bolt and plate materials are different, the required length of engagement (Q) is:

$$Q = L_e J = 1.57 \times 2.06 = 2.35 \text{ in}$$

where:

$$J = \frac{A_s \times S_{u\,bolt}}{A_n \times S_{utf}} = \frac{5.454 \times 173.5}{7.424 \times 61.8} = 2.06 > 1.0$$

$S_{u\,bolt}$ = 173.5 ksi Ultimate Strength, SB-637 Grade N07718, 300°F

$S_{u\,tf}$ = 61.8 ksi Ultimate Strength, SA-336 Type 304, 300°F

The available thread length is 2.5 inches (> 2.35 inches); therefore, the limiting condition for the closure bolts is tensile failure rather than thread shear failure of the bolt or cask body.

4.3.1.1.4 *Cask Lid Bolt Fatigue Evaluation*

The following evaluation calculates the maximum number of times or cycles that the closure bolts can be torqued to the maximum value during lid installation.

The maximum stress, S, on the cask closure bolts due to initial torque is:

$$S = \frac{KF}{A_t} = \frac{4 \times 121{,}519}{1.4713} = 330{,}372 \text{ psi} = 330.4 \text{ ksi}$$

where:

F = 121,519 lb Bolt load due to maximum torque

K = 4.0 Fatigue strength reduction factor (NB-3232.3(c))

$$A_t = 3.1416\left(\frac{E_s \min}{2} - \frac{0.16238}{n}\right)^2 = 1.4713 \text{ in}^2$$ ----- Bolt tensile area

$E_s$min = 1.4093 in Minimum pitch diameter of ext. thread

n = 8 Threads per inch

Estimated maximum stress, S_{th}, on the cask closure bolts due to bolt thermal load is:

$$S_{th} = \frac{KF}{A_t} = \frac{4 \times 12{,}000}{1.4713} = 32{,}624 \text{ psi} = 32.6 \text{ ksi}$$

where:

F_{Tc} = 12,000 lb Estimated thermal load at the cold condition

K = 4.0 Fatigue strength reduction factor (NB-3232.3(c))

$$A_t = 3.1416\left(\frac{E_s \min}{2} - \frac{0.16238}{n}\right)^2 = 1.4713 \text{ in}^2$$ ---- Bolt tensile area

$E_s$min = 1.4093 in Minimum pitch diameter of ext. thread

n = 8 Threads per inch

The alternating stress (S_a) is:

$$S_a = \frac{(S + S_{th}) - 0}{2} = \frac{(330.4 + 32.6) - 0}{2} = 181.5 \text{ ksi}$$

The number of cycles (N) determined using Table I-9.1 and Figure I-9.2.1 ASME Section III, Division 1, Appendix I is:

$$N = N_i \left(\frac{N_j}{N_i} \right)^{\log\left(\frac{S_i}{S}\right) / \log\left(\frac{S_i}{S_j}\right)} = 500 \left(\frac{1000}{500} \right)^{\log\left(\frac{148}{146}\right) / \log\left(\frac{148}{119}\right)} = 522 \text{ cycles}$$

This is bounded by the number of cycles (N) determined using Table I-9.1 and the Figure I-9.4 data for the maximum nominal stress (MNS) value ≤ 3Sm.

Therefore, using Table I.9-1 (MNS = 3Sm), the maximum number of cycles is:

$$N = N_i \left(\frac{N_j}{N_i} \right)^{\log\left(\frac{S_i}{S}\right) / \log\left(\frac{S_i}{S_j}\right)} = 200 \left(\frac{500}{200} \right)^{\log\left(\frac{205}{146}\right) / \log\left(\frac{205}{122}\right)} = 364 \text{ cycles}$$

Conservatively, the number of times the closure lid bolts may be torqued will be set to 350 times over the life of the bolts. This is conservative since the empty configuration torque value is less than the loaded configuration value.

4.3.1.1.5 *Cask Lid Bolt Bearing Load Evaluation*

The following evaluation calculates the maximum bearing stress that the bolt head imparts on the lid flange corresponding to the maximum bolt torque plus the estimated maximum bolt thermal load. The stress is compared with lid material's yield stress at a conservative temperature of 300°F. The evaluation considers the lid area as the weaker material.

The area of the lid flange loaded by the bolt head is:

$$A = \frac{\pi \left(D_{bh}^{\ 2} - D_{hole}^{\ 2} \right)}{4} = 1.99 \text{ in}^2$$

where:

D_{bh} =	2.25 in	Bolt head flange diameter.
D_{hole} =	1.59 in	Lid flange bolt hole diameter.

The maximum bearing stress, S_b, on the lid flange due to maximum torque plus maximum bolt thermal load is:

$$S_b = \frac{F}{A} = \frac{121{,}519 + 12{,}000}{1.99} = \frac{133{,}519}{1.99} = 67{,}095 \text{ psi} = 67.1 \text{ ksi}$$

where:

F = 121,519 lb	Bolt load due to maximum torque
F = 12,000 lb	Estimated Bolt thermal load at cold condition
$A = \pi(D_{bf}^2 - D_h^2)/4 = 1.99 \text{ in}^2$	Area of lid flange load by the bolt
D_{bf} = 2.25 in	Outer diameter of the bolt head flange
D_h = 1.59 in	Diameter of the lid flange bolt hole

Therefore, the Factor of Safety in bearing is:

$$F.S. = \frac{S_y}{S_b} = \frac{93.0}{67.1} = 1.39$$

where:

Lid material (SA-564, Type 630 (17-4PH)) yield strength at 300°F (conservatively greater than the maximum temperature of lid flange for the 100°F ambient case).

Note: Bolt material (SB-637, Grade NO7718) yield strength at 300°F is 138.3ksi.

4.3.1.1.6 *Cask Lid Pin Puncture Deformation*

The lid drop on pin is performed to assure the transportation cask maintains containment during HAC.

The lid design is such that there are no significant prying loads or moments for outwardly applied loads such as internal pressure and the inertial load of the cask contents. Lid material, thickness and diameter are similar to that of the MAGNATRAN cask design. As the MAGNATRAN package is designed for over 312,000 lbs loaded versus 256,000 lbs for the cask examined here, by comparative assessment, the transport cask lid design will be adequate for the effects of the pin puncture.

4.3.1.1.7 *Cask Body Pin Puncture Evaluation*

In accordance with 10 CFR 71 a puncture evaluation of the cask body is required. The puncture accident outlined in 10 CFR 71 requires that the cask suffer no loss of containment as a result of a 40 inch free fall onto an upright 6 inch diameter mild steel bar, which is supported on an unyielding surface. The impact orientation of the cask is required such that the maximum damage is inflicted upon the cask. The maximum cask damage will result from direct impacts of the pin on the following locations: (1) midpoint of cask side, (2) center of cask lid and (3) center of cask bottom.

The side, cask lid, and cask bottom punctures are typically analyzed using the cask finite element model methods. For this evaluation, a simple puncture/shell shear evaluation is performed.

Using the perimeter of the pin as a shear plane through the outer shell, the shear stress in the outer shell due to pin puncture is calculated below.

$$\tau_{os} = \frac{P}{A} = \frac{P}{\pi Dt} = 26.8 \text{ ksi}$$

where:

S	=	47,000 psi	Dynamic yield stress for pin
D	=	6.0 in	Pin Diameter
P	=	$\frac{S\pi D^2}{4}$ = 1,329 kip	Shear load due to pin
t	=	2.63in	Outer shell thickness

The factor of safety against failure in shear is:

$$FS = \frac{0.42S_u}{\tau_{os}} = \frac{26.04}{26.8} = 0.972$$

where:

S_u	=	65,100 psi	Tensile Strength, SA240 Type 304, 350°F

The margin for the Type 304 is less than 0, therefore the outer shell of the cask body is not adequate. Increased outer shell thickness will increase cask weight which is already at the limit. Therefore, evaluate SA240, Type XM-19.

The factor of safety against failure in shear is:

$$FS = \frac{0.42S_u}{\tau_{os}} = \frac{38.9}{26.8} = 1.45$$

where:

S_u	=	92,650 psi	Tensile Strength, SA240 XM-19, 350°F

This margin is satisfactory; therefore, the XM-19 outer shell of the cask body is not punctured.

4.3.1.1.8 *Impact Analysis*

The conceptual impact limiter design is based on proven geometry and materials. Wood is used in many impact limiter designs, in particular, NAC has licensed three transportation casks with variations of a single limiter design based on redwood and balsa wood. Although there have been two sets of this limiter design produced, complexities in the procurement of the redwood and balsa are the reason for the alternative design presented in this report. As such, the basis of this design incorporates the use of more readily available wood and an engineered material: foam. The structural components of the limiter, outer shells, mounting faces and gussets, are

made of 304 stainless steel. This material provides excellent corrosion and fatigue resistance. Finalization of the impact limiter analysis is required to be validated by scale model drop testing and materials testing.

Impact limiter attachments are through twelve 1-8UN socket head cap bolts which thread into the cask upper and lower forgings. Both the upper and lower attachment patterns are the same allowing for a single limiter design that can be installed on either end of the cask. Each limiter will weigh approximately 12,000 lbs and will have "hard-points" designed into them for rigging to support placement on the cask ends.

The limiter design must meet both normal conditions and HAC free-drop analyses. The cask impact orientation evaluated is the orientation that results in the maximum damage to the cask. Regulations also require that the cask be evaluated at the most unfavorable ambient temperature in the range from -20°F to +100°F.

For this report, there are two methods used to provide the preliminary evaluations of the wood/foam limiter design shown in Sections 4.3.1.1.8.1 through 4.3.1.1.8.3. For the end drop foam evaluation, there is a very basic arithmetic evaluation to determine foam thickness and density. The side drop and corner drop, for the wood and foam respectively, require an additional level of analysis. These two evaluations have been validated using a version of RBcubed, which is a closed form combinatorial geometry based impact evaluation tool.

The RBcubed impact limiter crushing evaluation is performed by moving the impact limiter into an unyielding-rigid impact surface. For each displacement of the impact limiter, the energy due to the crushing of the foam/wood is computed using the crush strength versus strain for the material(s). As the impact limiter is being crushed, the total potential energy is being recomputed accounting for any additional movement of the center of gravity. The solution continues until the crush energy exceeds the potential energy, i.e., the cask stops. Both hot and cold conditions are evaluated to ensure there is adequate material (hot) and accelerations are bounded (cold). The hot condition typically reduces the crush strength by 10% resulting in further crushing, i.e., the maximum crush of the impact limiter. The cold condition increases the crush strength by 10% resulting in higher accelerations.

Upon finalization of the design validation and prior to performing any scale drop evaluations, there would most likely be additional calculations using a high fidelity analytical tool such as LS-Dyna.

4.3.1.1.8.1 End Drop

<u>Energy/Volume Evaluation of Foam</u>

- Foam performance (General Plastics FR-3700)
- Kinetic Energy = 275,000lb x 30' = $8.25e^6$ft-lb and is absorbed by $47.5^2 \times \pi/4$ x 28.25 = 50,000 in^3 of foam)
- Foam crush calculation:

- First check is crush distance: theoretical end drop deceleration (assumes uniform deceleration of distance) = h1/h2 = A, where h1 is 30' (360") & h2 = 28" = 13g - Actual is about 3 x theoretical => 13 x 3 ~40
- Develop average stress to absorb energy, 275,000x 360"/50,000 = 1980psi
- Either 15lb/ft^3 or 18lb/ft^3 foam can develop 2000psi crush strength
- Verify deceleration with 2000psi foam: 2000 x (47.5^2 × π/4)/275000 = ~13, Actual performance is about 3X theoretical, therefore ~40g.
- Corner drops require more complex analysis to validate the crush distance does not bottom out the impact limiter, estimated 2500psi foam

RB Cubed End Drop Analysis

- The graph (Figure 4-9) demonstrates the material crush distance as it correlates to dissipation of the end drop energy. The Table 4-5 provides the maximum accelerations and maximum crush distance for the temperatures and orientations inspected.

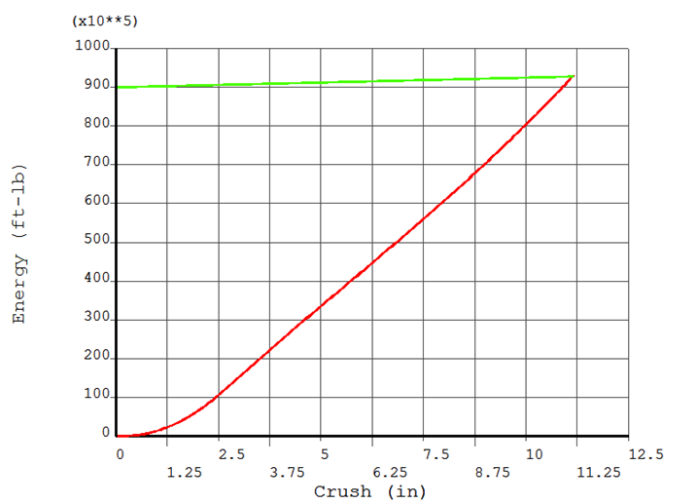

Figure 4-9. End Drop – Energy Dissipation by Crush Distance

Table 4-5. End Drop - Maximum Accelerations and Crush Distances

END DROP	Cold	Hot
Max Acceleration (g)	46.9	52.3
Max Crush (% strain)	43	61

4.3.1.1.8.2 Side Drop

Energy/Volume Evaluation of Wood

- Wood performance (parallel to grain crush)
- Kinetic Energy = 250,000lb × 30' = $7.5e^6$ ft-lb and is absorbed by 85 × π/4 × 13.0 × 20 = 17,357in^3 × 2 (2 limiters) = 34,715 in^3 of wood
- Wood crush calculation
- First check is crush distance: theoretical side drop deceleration (assumes uniform deceleration of distance) = h1/h2 = A, where h1 is 30' (360") & h2 = 20" = 18g - Actual is about 3 x theoretical => 18 × 3 ~54
- Develop average stress to absorb energy, 250,000 × 360"/34,715 = 2,593 psi
- Aspen develops close to 4,250 psi crush strength
- Verify deceleration with 4,250 psi wood: 4,250 × (85 × π/4 × 13.0 × 2)/250000 = ~30, Actual performance is about 3× theoretical, therefore ~90g.
- Accelerations exceed target of 60g and requires more complex analysis to validate.

RB Cubed Side Drop Analysis

The graph (Figure 4-10) demonstrates the material crush distance for dissipation of the side drop energy. Table 4-6 provides the maximum accelerations and maximum crush distance for the temperatures and orientations inspected.

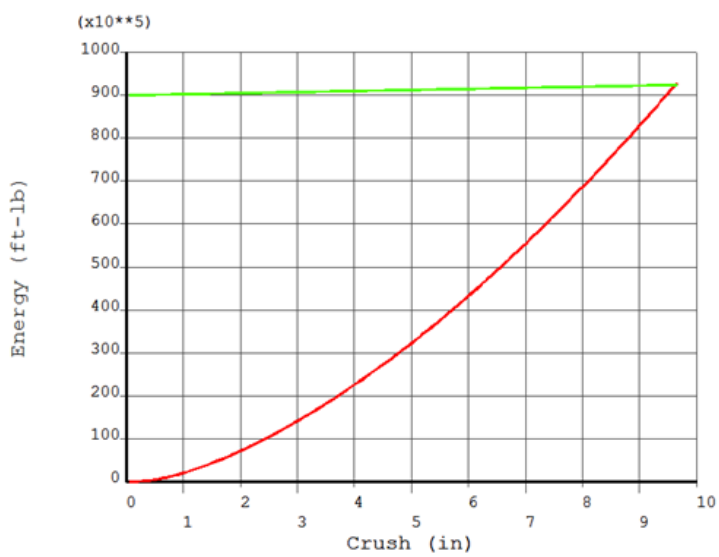

Figure 4-10. Side Drop – Energy Dissipation by Crush Distance

Table 4-6. Side Drop - Maximum Accelerations and Crush Distances

SIDE DROP	Cold	Hot
Max Acceleration (g)	62.9	49.8
Max Crush (% strain)	46	65

4.3.1.1.8.3 Corner Drop

Corner drop geometry is too complex to develop reasonable basic energy/volume calculations for and therefore the scoping evaluation is based on the following closed form solutions.

RB Cubed Analysis

The corner drop orientation corresponds to the cask body center of gravity over the cask edge being dropped 30-feet. Just as the side and end drop evaluations, the movement of the cask is into the impact plane and compares the crush energy to the potential energy up to termination of the impact limiter solution. As the corner drop initiates with a small contact area, the maximum crush strain is substantially greater than that of the side or end drops and is accommodated for in the limiter design. Only the backed area of the impact limiter is used to determine the crush energy. The properties for the hot and cold conditions are performed in the same manner as for the end and side drop.

Figure 4-11 shows the approximated deformed shape resulting from a corner drop. Table 4-7 provides the maximum accelerations and maximum crush distance for the temperatures and orientations inspected.

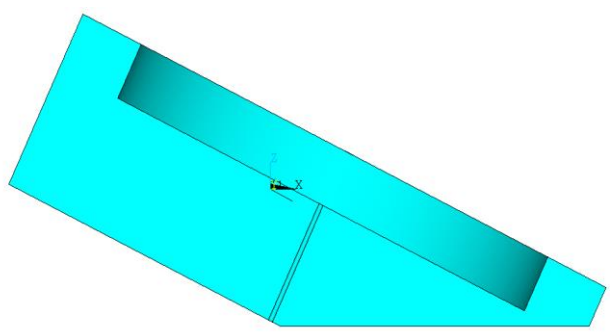

Figure 4-11. Corner Drop – Approximated Deformed Shape

Table 4-7. Corner Drop – Maximum Acceleration and Crush Distances

CORNER DROP	Cold	Hot
Max Acceleration (g)	65	49.8
Max Crush (% strain)	60	82

4.3.1.1.9 *Lifting and Tie-Down Evaluation*

The transportation cask has two diametrically opposed lifting trunnions located on the upper forging. These are the lift points for the transportation cask for operations within the nuclear facility and for loading onto a shipping conveyance. The lifting trunnions are designed to satisfy the requirements of 10 CFR 71.45(a), NUREG-0612 and ANSI N14.6. The design criteria in NUREG-0612 and ANSI N14.6 equal, or exceed, those of 10 CFR 71.

NUREG-0612, Section 5 provides guidance for control of heavy loads in operating plants. Specifically, in section 5.1.1(4), it is provided that "special lifting devices" should satisfy the guidelines of ANSI N14.6-1978. Special lifting devices are defined within NUREG-0612 as:

"A lifting device that is designed specifically for handling a certain load or loads, such as the lifting rigs for the reactor vessel head or vessel internals, or the lifting devices for spent fuel cask."

Section 4.2 within ANSI N14.6 provides the necessary design criteria for the lifting device. For a general lift, this would require the lifting yoke or strong-back to be capable of lifting 3 times the load without exceeding yield strength of the materials or 5 times the load without exceeding the tensile strength of the materials. For a transport cask loaded with spent fuel, the lift is typically considered to be a "Critical Load" and invokes additional requirements. Guidance for these lifts are found in ANSI N14.6, Section 7, and address both redundant load path lifts and single load path lifts. The transport cask, by use of a single set of trunnions, will not meet the redundant load path criteria and is then typically defined as a "single-failure proof" lift requiring an additional 2x load factor be applied. The resulting criteria for the lifting rig is then considered to be 6 times the load without exceeding yield strength of the materials or 10 times the load without exceeding tensile strength of the materials. Evaluations are performed for materials whose yield strengths are found to be within 80% of their tensile strengths to assure the bounding condition has been evaluated. The criteria for the lifting device which directly affects the transport cask design are identified in ANSI N14.6, Section 4.3.4. This is the criteria that guide the designer to ensure the lifting rig adequately distributes the load(s) to all load bearing attachment points, i.e. the lifting trunnions. As such, the lifting trunnions and their attachments are evaluated as N14.6 components.

The two lifting trunnions are bolted to the top forging of the cask, located at 180° intervals. Two rotation trunnions located on the outer shell near the bottom of the cask permit rotation of the cask to and from the horizontal position and also provide longitudinal and vertical tie-down restraint during transport.

A single-failure proof two-arm lift beam (designed to critical load requirements) is used to lift and handle the transportation cask. Typically, the facility overhead crane is used to lift and position the transportation cask. The impact limiters are removed during lifting and handling.

4.3.1.1.9.1 Lifting Trunnion Analysis

NAC currently implements this design in the MAGNATRAN cask. As such, the design is validated, using a much higher design load, with both the finite element code "ANSYS", through the generation of a three-dimensional model of the cask upper forging/lifting trunnion, and

classic analysis, specifically thread analysis for the trunnion attachment bolts. NAC's ANSYS model is used to evaluate a quarter-symmetry (90°) 3D model of the lifting trunnion and top forging constructed using ANSYS solid elements. Bolts are modeled using beam elements, and the interaction between the lift trunnion and the bolts is modeled using gap elements. Pressure loads are applied to the trunnion to represent lift conditions. Details of the ANSYS model and boundary conditions are presented in Figure 4-12. Classic hand calculations are used to qualify the trunnion bolts.

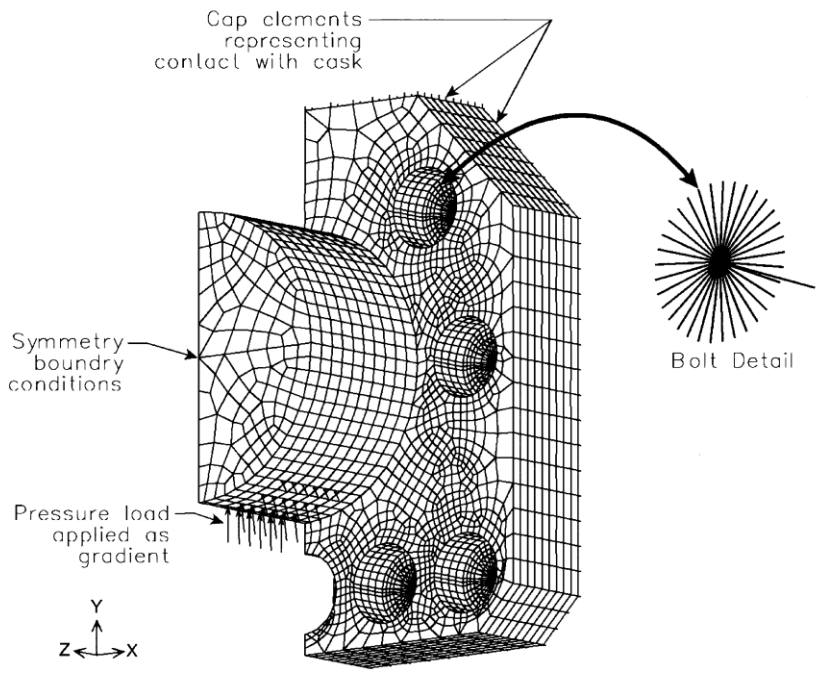

Figure 4-12. Details of the ANSYS Model and Boundary Conditions

Analysis Criteria

The lifting trunnions are designed in accordance with NUREG-0612 and ANSI N14.6 for critical lift conditions. Linearized stress values are compared to a factor of 6 on yield strength and a factor of 10 on ultimate strength for lifting components. Membrane stresses are compared to 1.0 S_m and membrane plus bending stresses are compared to 1.5 S_m for the top forging. Since the bolts are not in the load path for the lift, the bolt stresses are compared to the allowable stresses shown in Table 4-8.

Table 4-8. Bolt Stresses

Stress	Stress Criteria
Shear	0.6 S_m
Tensile	S_m

Design Input

The calculated weight of MAGNATRAN without impact limiters is 296,500 pounds. In the ANSYS model, a maximum loaded cask weight of 297,000 pounds is used and bounds the maximum transportation cask configuration weight. A dynamic load factor of 1.10 is also applied. The lifting trunnion and bolts are fabricated from 17-4PH, SA-564, Type 630 (17-4PH) and Inconel, SB-637, Grade N07718, respectively.

Finite Element Method

A three-dimensional finite element model of a lifting trunnion and the top forging, using ANSYS, is constructed using SOLID45 (trunnion) and SOLID95 (forging) elements, respectively (see Figure 4-12) taking advantage of the symmetry of the transport cask, the model represents a one-quarter (90°) section. Bolts are modeled using BEAM4 elements and the interaction between the lift trunnion and top forging is modeled using CONTAC52 elements. The trunnion will load the cask body forging during lifting operations because the gap between the cask body and trunnion is smaller than the radial gap between the trunnion and bolts. To simulate the bolt, actual properties, including area and moment of inertia, are included. The model is constrained at both ends in the circumferential direction for all nodes in the planes of symmetry, and the nodes at the bottom of the shells are axially restrained. Gap elements are used to transmit compression loads from the trunnion to the cask forging. Pressure equivalent to one-quarter of the total lift load times a dynamic load factor of 1.10 is applied to the element faces on the surface of the lift trunnion. This pressure load is applied to an area equivalent to the contact area with the lift yoke arm.

Trunnion Results

The stress evaluation for the lifting trunnion is performed by comparing average stresses against allowable stresses. The averaging is performed using element table operations in ANSYS. For the trunnion, the stresses are averaged across the axial trunnion section where maximum bending occurs. The maximum average trunnion stresses are:

σ_b	=	-9,435 psi	Bending Stress
τ	=	5,430 psi	Shear Stress
σ_t	=	-8 psi	Axial Stress

Conservatively assuming the stresses occur at the same point, the Von Mises stress is:

$$\sigma = \sqrt{(\sigma_t + \sigma_b)^2 + 3(\tau)^2} = \sqrt{(-8 - 9{,}435)^2 + 3(5{,}430)^2} = 13.33 \text{ ksi}$$

The factor of safety for the material yield strength (93.0 ksi at 300°F, SA-564 Type 630 (17-4PH)) is:

$$FS = 7.0 \geq 6.0$$

The factor of safety for the material ultimate strength (135.0 ksi at 300°F, SA-564 Type 630 (17-4PH)) is:

$$FS = 10.1 \geq 10.0$$

The lift load is transmitted from the trunnion to the cask body forging. The resulting load induces a prying action in the five bolts at the base of the trunnion and the plate section between bolts. The maximum calculated stresses for the section between the bolts are:

σ_{b1}	= 4,010 psi	Top layer average bending stress
σ_{b2}	= -2,690 psi	Bottom layer average bending stress
σ_m	= 660 psi	Average membrane stress

The maximum membrane plus bending stress is:

$$\sigma = 660 + 4{,}010 = 4{,}670 \text{ psi}$$

The factor of safety for the material yield strength (93.0 ksi at 300°F, SA-564 Type 630 (17-4PH)) is:

$$FS = 19.8 \geq 6.0$$

The factor of safety for the material ultimate strength (135.0 ksi at 300°F, SA-564 Type 630 (17-4PH)) is:

$$FS = 28.7 \geq 10.0$$

<u>Bolt Evaluation</u>

The bolts do not carry shear loads due to the lifting of the cask. The cask weight is carried through bearing of the trunnion on the cask body, which is evaluated above. The bolts only carry the prying loads of the trunnion lift. The trunnion bolts are evaluated using the methodology presented in Machinery's Handbook. The bolt preload torque is 120±20 ft-lb.

The maximum bolt preload is:

$$P = \frac{T}{kD} = \frac{140 \times 12}{0.158 \times 1.125} = 9{,}451 \text{ lb}$$

where:

T = 140 ft-lb	Maximum bolt torque
D = 1.125 in	Bolt diameter
K = 0.158	Torque coefficient for dry threads

The finite element model reported the maximum bolt load to be 12,984 pounds. Combining this load with the bolt preload, the maximum bolt load is 22,435 pounds.

The following equations are required to calculate thread areas for tensile and shear.

$$A_t = 3.1416\left(\frac{E_{s\,min}}{2} - \frac{0.16238}{n}\right)^2 = 0.776 \text{ in}^2$$

Area to compute the shear stress for the bolt:

$$A_s = 3.1416 n L_e K_{n\,max}\left[\frac{1}{2n} + 0.57735\left(E_{s\,min} - K_{n\,max}\right)\right] = 4.602 \text{ in}^2$$

Area to compute the shear stress for the forging:

$$A_n = 3.1416 n L_e D_{s\,min}\left[\frac{1}{2n} + 0.57735\left(D_{s\,min} - E_{n\,max}\right)\right] = 6.408 \text{ in}^2$$

where:

d = 1.125 in	Bolt diameter
n = 8	Threads per inch
L_e = 2.44 in	Thread length of engagement
K_{nmax} = 1.015 in	Maximum minor diameter of internal thread
E_{nmax} = 1.0528 in	Maximum pitch diameter of internal thread
E_{smin} = 1.0348 in	Minimum pitch diameter of external thread
D_{smin} = 1.1079 in	Minimum major diameter of external thread

Table 4-9 provides a summary of the factors of safety for the maximum bolt load.

Table 4-9. Factors of Safety for the Maximum Bolt Load

Applied Load	
Maximum Bolt Load	22.44 kips
Thread Stress Evaluation	
External Thread Shear Stress (SB-637, Grade N07718)	4.9ksi
Factor of Safety (0.6Sm)	5.74
Internal Thread Shear Stress (SA-336, 304)	3.50ksi
Factor of Safety (0.6Sm)	3.43
Bolt Tensile Stress (SB-637, Grade N07718)	28.91ksi
Factor of Safety (Sm)	1.62

Allowable stresses defined as:

SA-336, 304 Stainless Steel @ 300°F (internal threads) 20.0 ksi

SB-637, Grade N07718 46.9 ksi

Top Forging Evaluation

The top forging as presented for the transportation cask is very close to that of the MAGNATRAN cask design. There are slight differences in outer shell thickness and height of upper forging and will require specific evaluations to assure performance. The upper forging is evaluated by taking sections, through representative cross-sections in the top forging, away from the localized stresses near the trunnion (see Figure 4-13).. Two sections are taken at 10 degrees in the model and two sections are taken at 45 degrees to show the decay in stresses with distance from the trunnion region. The section path end-point locations are listed in Table 4-10 in a cylindrical coordinate system with the origin located at the center of the top forging at the height of the top of the lead. The stresses and safety factors are listed in Table 4-11. A temperature of 300°F is used to determine the allowable values.

Table 4-10. Section Path End Point Locations

Section	**Node 1**			**Node 2**		
	X	**Y**	**Z**	**X**	**Y**	**Z**
1	36.12	10.26	0	36.12	10.26	20.04
2	43.35	9.78	0	43.35	9.78	20.04
3	36.12	45	0	36.12	45	20.04
4	43.35	45	0	43.35	45	20.04

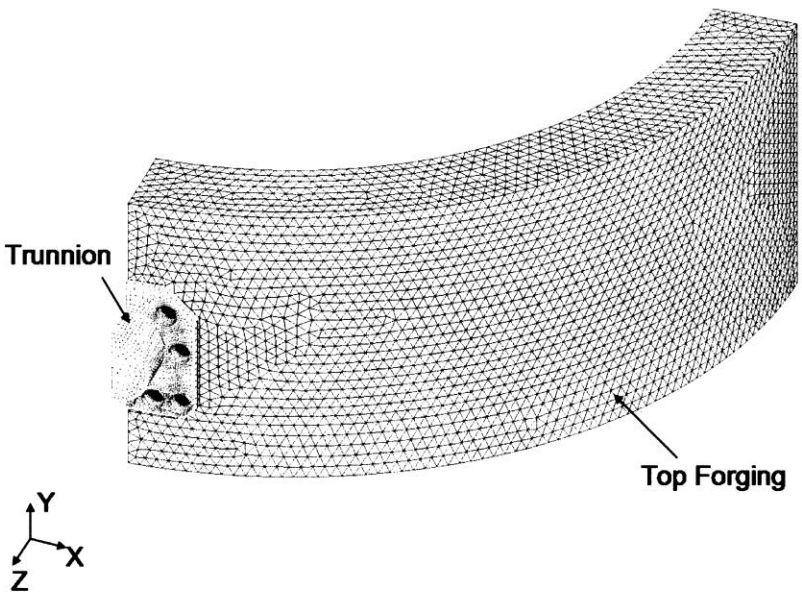

Figure 4-13. Top Forging Showing Stresses near Trunnion

Table 4-11. Stresses and Safety Factors for Section Path End Point Locations

Section	Node 1	Node 2	Membrane SI (ksi)	Membrane Allowable (ksi)	Membrane FS	M+B SI (ksi)	M+B Allowable (ksi)	M+B FS
1	67309	89523	0.84	20	23.87	1.24	30	24.11
2	73197	83218	3.06	20	6.54	4.01	30	7.48
3	67353	89567	0.64	20	31.4	1.02	30	29.48
4	73251	83272	0.13	20	159.28	0.3	30	100.31

As indicated by the margins presented, lifting and handling of the transportation cask using a MAGNATRAN type trunnion arrangement will meet regulatory requirements in all handling cases. Implementation of the bolted trunnion design supports the development of a more uniform impact limiter design by avoiding protrusions from the cask body that require pockets which reduce the depth of section in the limiter and require protection from impact on side drop evaluations.

4.3.1.1.9.2 Tie Down Analysis

Transportation cask tie downs are associated with the performance of the package when in the transport configuration. Typical arrangement for a rail conveyance or heavy haul transportation vehicle is the utilization of a “skid” type support cradle. In some instances this is a set fixture incorporated into the conveyance design or it can also serve as an intermodal type device which allows the cask and skid to be moved from a rail conveyance to an over the road conveyance without removing limiters and lifting the cask body independently.

The MAGNATRAN cask tie down system is designed to satisfy the requirements of 10 CFR 71.45(b) and the AAR Field Manual, Rule 88. Note that 10 CFR 71.45(b) requires the structural components integral with cask body, that are used for the tie down, must be capable of withstanding the specified forces without generating stresses in any material of the package in excess of its yield strength.

The cask body components, rotation trunnions at the lower end of the cask and the shear ring located on the top forging within the neutron shield and their attachment to the cask are analyzed using classical hand calculation methods.

The weight of the transportation cask, conservatively assumed to be 315,000 lbs., is multiplied by the following factors to calculate the reaction forces at the cask support locations.

Per 10 CFR 71.45(b) the shipping inertia loads are:

- 10 g longitudinal acceleration in the direction of travel
- 2.0 g vertical acceleration
- 5.0 g lateral acceleration perpendicular to the direction of travel

Per AAR Rule 88, the shipping inertia loads are, noting that the Federal Regulations are bounding:

- 7.5 g longitudinal acceleration in the direction of travel
- 2.0 g vertical acceleration
- 2.0 g lateral acceleration perpendicular to the direction of travel

<u>ASSUMPTIONS</u>

• Moment loading of the rotation trunnions need not be evaluated.

Basis: The rotation trunnions only restrain longitudinal loading of the cask from the rear (cask bottom) direction. The rotation trunnion design thereby only accepts longitudinal load from the rear side of the trunnion shaft, which places the weld ahead of the shaft in compression. Therefore, the trunnion support welds only need to be evaluated for shear.

• Temperature of that portion of the cask body external surface which is in contact with the saddle remains below 250°F.

Basis: The maximum cask body external temperature near the saddle is estimated as 275°F however,

1. the cask body external surface is in contact with the saddle portion of the cooler transportation support frame
2. this external surface area is not subject to solar insolance
3. the saddle location is not in the cask heat zone

• Temperature of that portion of the rotation trunnions which is in contact with the transportation support frame remains below 150°F.

Basis: The maximum cask body external temperature near the rotation trunnion support is estimated as 275°F however,

1. the rotation trunnions are projected 8.5 inches outboard of the cask body outer shell and are surrounded by ambient air
2. the rotation trunnions are in contact with the cooler transportation frame

Side and end views of the cask system in the shipping configuration are given in the preceding Figure 4-14. The appropriate dimensions that locate the cask center of gravity to the cask support points are shown. End 1, which is the top end of the cask, is supported (Pt 1) by a saddle for lateral (+Z or -Z) and downward loads (-Y), a tie down strap for upward loads (+ Y), and a shear ring for longitudinal loads in the -X direction. The opposite end of the cask at End 2 is supported by (Pt 2) two rotation trunnions, locations that support the cask for vertical loads (+ Y or - Y) and longitudinal loads in the +X direction.

At End 1, the resultant force on the cask from the saddle due to a longitudinal load (-X) is assumed to act at the saddle and the shear ring. For a lateral load, the contact surface is only one-half of the saddle, and the resultant force is assumed to act at one location. This location is found by assuming that the contact pressure between the saddle and cask is proportional to the sine function of the angular distance measured from the lowest point on the saddle.

The load reactions at the cask support locations are calculated using summation of moments about the center of gravity.

$$\sum M = 0$$
$$\sum F = 0$$

Loading is considered in both the positive and negative directions for each of the three principle directions, and therefore reaction forces at the cask support locations are calculated for a total of six cases. The individual reactions in the three loading directions are then combined to provide the resultant reactions at the cask support locations. These results are used for computing stress and evaluated against allowable limits.

As seen in Table 4-12, areas inspected demonstrate adequate margins with the exception of the rear rotation trunnion shear which is just below allowable limits indicating a slightly larger diameter may be required or some conservatism (MAGNATRAN basis) can be removed from the package weight.

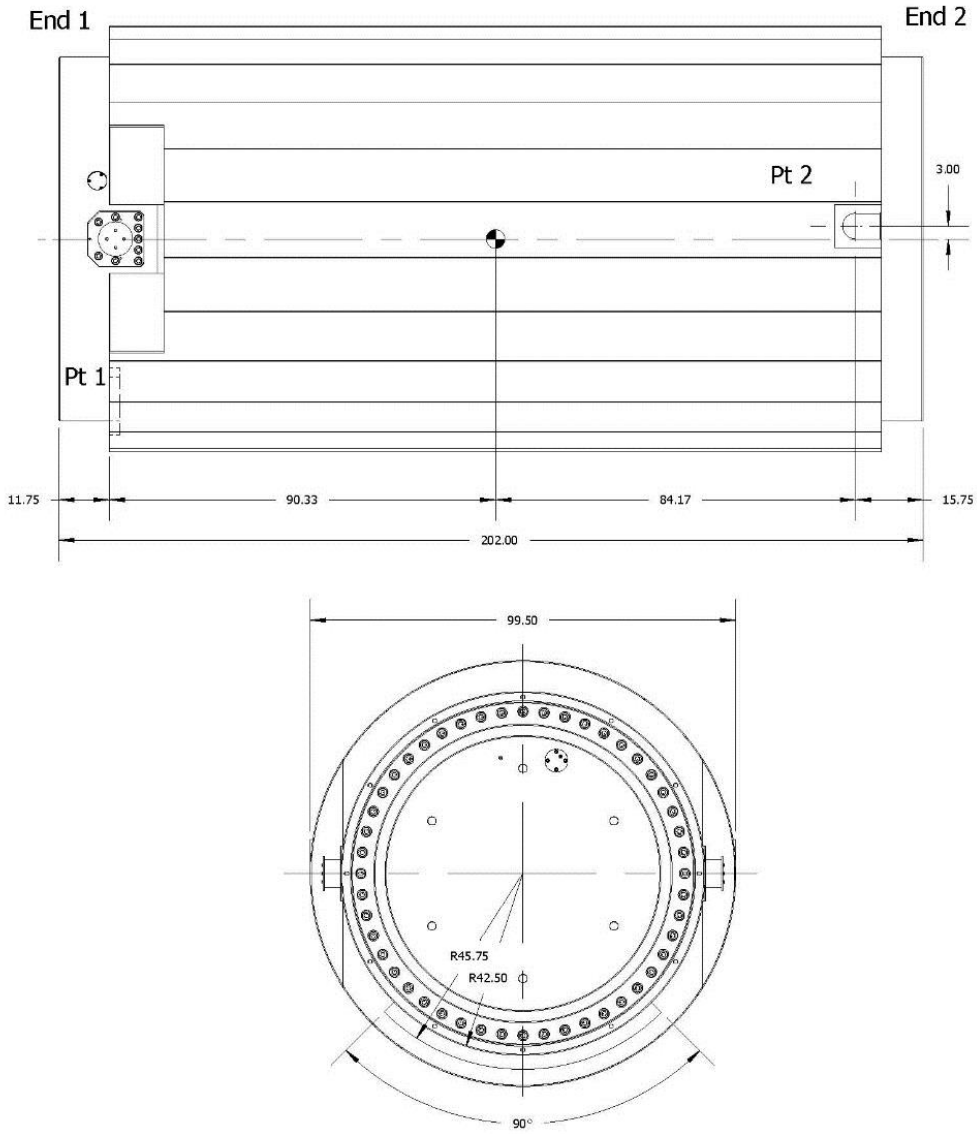

Figure 4-14. Side and End Views for the Transportation Cask

Table 4-12. Stress Evaluation Results

		Minimum Factor of Safety (F.S.)
Stress Evaluation	**CG[1] location 102 (in) est**	**MIN**
Bearing on Shear Ring	All	1.46
Shear in Shear Ring	All	1.13
Vertical Bearing on Cask Body	All	4.08
Lateral Bearing on Cask Body	All	5.45
Combined Bearing on Cask Body	All	3.25
Shear in Rotation Trunnion Pin	All	0.99
Vertical Shear in Rotation Trunnion Support	All	1.54
Axial Shear in Rotation Trunnion Support	All	1.86
Rotation Trunnion Support Weld	All	1.14
		Minimum Overall F.S.
		0.99

Note: CG = center of gravity

Table 4-13 and Table 4-14 present the results of the load case evaluations. Table 4-13 provides the results of 10 CFR 71.45b Load cases and reactions. Table 4-14 provides the results of AAR Rule 88 Load cases and reactions.

Table 4-13. Reactions for CFR 71.45b Loading

Case	Fx1	Fy1	Fz1	Fx2a	Fx2b	Fy2a	Fy2b	Fz2
1 +X	0.0	54.9	0.0	-1575.0	-1575.0	-27.4	-27.4	0.0
2 -X	3150.0	713.0	0.0	0.0	0.0	-356.5	-356.5	0.0
3 +Y	0.0	-312.8	0.0	0.0	0.0	-158.6	-158.6	0.0
4 -Y	0.0	312.8	0.0	0.0	0.0	158.6	158.6	0.0
5 +Z	0.0	0.0	-782.1	0.0	0.0	252.0	-252.0	-792.9
6 -Z	0.0	0.0	782.1	0.0	0.0	-252.0	252.0	792.9
Load Case Combinations								
1 + 3 + 5	0.0	-258.0	-782.1	-1575.0	-1575.0	66.0	-438.0	-792.9
2 + 3 + 5	3150.0	400.1	-782.1	0.0	0.0	-263.0	-767.1	-792.9
1 + 4 + 5	0.0	367.7	-782.1	-1575.0	-1575.0	383.2	-120.9	-792.9
2 + 4 + 5	3150.0	1025.8	-782.1	0.0	0.0	54.1	-449.9	-792.9

Table 4-14. Reactions for AAR Rule 88 Loading

Case	Fx1	Fy1	Fz1	Fx2a	Fx2b	Fy2a	Fy2b	Fz2
1 +X	0.0	41.2	0.0	-1181.3	-1181.3	-20.6	-20.6	0.0
2 -X	2362.5	534.7	0.0	0.0	0.0	-267.4	-267.4	0.0
3 +Y	0.0	-312.8	0.0	0.0	0.0	-158.6	-158.6	0.0
4 -Y	0.0	312.8	0.0	0.0	0.0	158.6	158.6	0.0
5 +Z	0.0	0.0	-312.8	0.0	0.0	100.8	-100.8	-317.2
6 -Z	0.0	0.0	312.8	0.0	0.0	-100.8	100.8	317.2
Load Case Combinations								
1 + 3 + 5	0.0	-271.7	-312.8	-1181.3	-1181.3	-78.4	-280.0	-317.2
2 + 3 + 5	2362.5	221.9	-312.8	0.0	0.0	-325.1	-526.8	-317.2
1 + 4 + 5	0.0	354.0	-312.8	-1181.3	-1181.3	238.8	37.2	-317.2
2 + 4 + 5	2362.5	847.6	-312.8	0.0	0.0	-8.0	-209.6	-317.2

4.3.1.2 Basket Structural Analyses

Analyses have been performed to demonstrate that the basket assemblies are capable of satisfying the applicable structural design criteria when subjected to the most severe transportation design loading. For the purposes of this report, the most limiting transportation design loading is assumed to be the HAC 30-foot side drop, for which an equivalent static acceleration load of 60*g* is assumed.

The basket assemblies are designed in accordance with the requirements of Subsection NG of the AMSE Code.[4] Per Regulatory Guide 7.6[5], the design criteria for HAC are similar to those for Level D Service Limits. In accordance with Subsection NG, Article NG-3225, the rules of Appendix F[6] of the ASME Code may be used for evaluating Service Loadings for which Level D limits are designated. Specifically, the acceptance criteria of F-1340 for plastic system analysis are applied to the basket assemblies.

The maximum stresses in each of the basket assembly designs for the 60*g* HAC side drop loading are determined using plastic system finite element analysis (FEA), as discussed in the following subsections. Each basket assembly design is evaluated for a range of side drop impact orientations to determine the maximum stress intensities. In accordance with F-1341.2, the

[4] American Society of Mechanical Engineers (ASME) Boiler and Pressure Vessel Code, Section III, Division 1, Subsection NG, *Core Support Structures*, 2004 Edition.

[5] Regulatory Guide 7.6, *Design Criteria for the Structural Analysis of Shipping Cask Containment Vessels*, Revision 1, U.S. Nuclear Regulatory Commission, Office of Standards Development, March 1978.

[6] American Society of Mechanical Engineers (ASME) Boiler and Pressure Vessel Code, Section III, Division 1, Appendix F, *Rules for Evaluation of Service Loadings with Level D Service Limits*, 2004 Edition.

maximum general primary membrane stress intensity (P_m) and maximum primary stress intensity ($P_L + P_b$) within the basket are demonstrated to not exceed $0.7S_u$ and $0.9S_u$, respectively.

Plastic system analyses of basket assembly designs are also performed to demonstrate that they satisfy the applicable design criteria for buckling under the HAC side drop loading. In accordance with F-1331.5, the maximum compressive loading is limited to 2/3 of the buckling load determined by a comprehensive plastic instability analysis. For the 60*g* HAC side drop loading, this buckling design criterion is satisfied provided that the plastic instability load is shown to be greater than 150% of the design load (i.e., greater than 90*g*).

4.3.1.2.1 *32P Basket Structural Analyses*

The structural analyses of the 32P basket assembly are performed using the ANSYS general-purpose finite element analysis program. The three-dimensional finite element (FE) model shown in Figure 4-15 is used for both the stress and plastic instability analyses. The FE model represents a 9-inch axial segment of the full 32P basket cross-section at the mid-length of the basket assembly where the axial spacing of the edge gusset plates is largest and consequently the maximum stresses will occur. The full cross-section model is used to evaluate four (4) different circumferential impact orientations for the HAC side drop; 0°, 16°, 33° and 45° relative to the basket centerline. Symmetry boundary displacement constraints are modeled at the axial ends of the model. A ring of 1-inch thick gusset plates is included at the mid-length of the model. This modeling approach is used to account for the possibility of lateral buckling of the outer ligaments of the gusset plates in the plastic instability analysis.

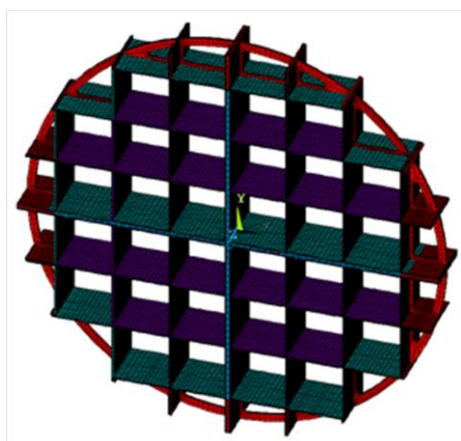

Figure 4-15. 32P Basket Structural Model

All ¼-inch thick egg-crate plates, 1-inch thick and ½-inch thick edge support plates, 1-inch thick gusset plates, and ½-inch thick center plates are modeled using 3-D 8-node solid brick elements. The fuel assemblies and DFC assemblies are not explicitly modeled; instead the loading on the basket assembly structure from these items is modeled as uniform pressure loads on the supporting egg-crate plates. The heaviest PWR assembly (B&W 15×15 with control components) weighs 1,725 pounds and has an overall length of approximately 173.5 inches, resulting in an average line load of 9.94 lb/inch. However, an upper bound line load of 10.0 lb/inch is conservatively assumed for each PWR fuel assembly. The line load used for the DFCs

inside the eight perimeter cells, which have an 8.85-inch square inside dimension and a 0.0595-inch thick wall, is 0.61 lb/inch. Based on these line loads, the total tributary weight applied to each of the 24 basket cells for intact fuel and the 8 basket cells for DFC are 90.0 pounds and 95.49 pounds, respectively. In addition, the neutron absorber angles, which are attached to the insides of 24 of the 32 egg-crate cells, are not explicitly modeled; instead the density of the egg-crate plates that support the neutron absorber angles is increased to account for their mass, as discussed below.

The nodes and elements at the locations of the welded connections between the various components of the basket assembly are merged, assuming complete joint penetration welds or equivalent. The non-linear interfaces between the center plates and egg-crate plates are modeled using surface-to-surface contact elements and target elements. In addition, contact elements are used to model the non-linear interface between the basket edge support plates and the cask cavity.

The plastic behavior of the basket assembly SA-537 Class 1 carbon steel structural members is modeled using bilinear kinematic hardening, defined by the initial elastic modulus, yield strength, and tangent modulus, as defined in Table 4-15. These properties are defined at two different temperatures; 700°F for the basket interior and 500°F for the basket perimeter. The carbon steel components of the basket assembly are modeled with a density of 0.284 lb/in^3 and Poisson's ratio of 0.3. For the egg-crate plates that support the neutron absorber angles, the material density is increased to 0.340 lb/in^3 to account for the mass of the neutron absorber plates which are not explicitly modeled.

For each of the four side drop impact orientations evaluated, a non-linear large deflection plastic-system analysis is performed. The 60*g* HAC side drop design loading is gradually applied to determine the maximum stresses. The loading is then increased to 90*g* (i.e., 150% of the 60*g* HAC side drop load) to demonstrate compliance with the plastic instability buckling design criteria.

Table 4-15. Plastic Material Properties for SA-537 Class 1 Carbon Steel

Material Property	Temperature	
	700°F	500°F
Elastic Modulus (ksi)	25,500	27,300
Yield Strength (ksi)	32.3	35.4
Tangent Modulus (ksi)	165	151

The results of the 32P basket assembly HAC side drop stress analyses, which are summarized in Table 4-16 demonstrate that the 32P basket assembly satisfies the plastic-system analysis design criteria of ASME Appendix F, Article F-1341.2 for all impact orientations evaluated. The maximum primary membrane (P_m) stress intensity results from the 0-degree impact, whereas the maximum general primary ($P_L + P_b$) stress intensity results from the 16° impact Stress intensity contour plots for the 0° and 16° impact orientations are shown in Figure 4-16 and Figure 4-17, respectively. Both maximum stresses occur at the periphery of the basket assembly.

Table 4-16. 32P Basket HAC Side Drop Stress Analysis Results

Impact Angle	Stress Type	Maximum S.I. (ksi)	Allowable S.I. (ksi)
0°	P_m	33.2	47.9
	$P_L + P_b$	46.6[1]	61.6
16°	P_m	31.2	47.9
	$P_L + P_b$	48.0[1]	61.6
33°	P_m	33.0	47.9
	$P_L + P_b$	46.1[1]	61.6
45°	P_m	33.1	47.9
	$P_L + P_b$	45.7[1]	61.6

Notes:

1. The highest stress intensity occurring anywhere in the model is conservatively reported as the maximum membrane plus bending intensity.

The results of the plastic instability analyses demonstrate that the 32P basket remains structurally stable for HAC side drop loading up to 90*g* (i.e., 150% of the 60*g* HAC side drop loading) for all four impact orientations evaluated. The results indicate that the limiting member for all impact orientations is the outer ligaments on the gusset plates. The lowest plastic instability load for the 32P basket assembly is 1.94 (corresponding to a side drop load of 116*g*), resulting from the 45° impact orientation. The deformed shape of the 32P basket assembly immediately preceding the plastic instability load is shown in Figure 4-18. The figure shows significant in-plane deformation of the outer ligament of the gusset plate nearest the point of impact, indicating member buckling. Therefore, the results demonstrate that the 32P basket assembly satisfies the applicable buckling design criteria for the 60g HAC side drop.

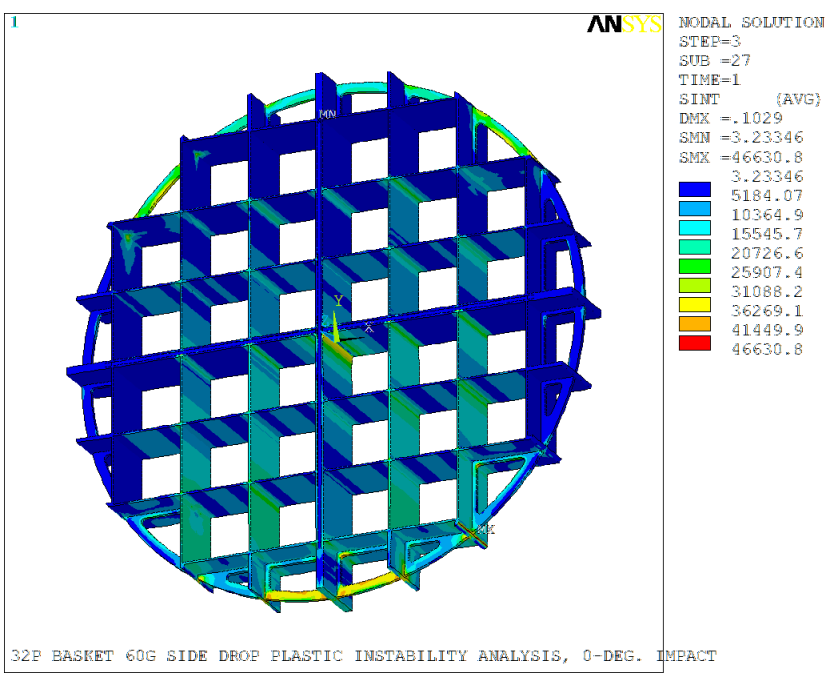

Figure 4-16. 32P Basket 60*g* 0° Side Drop S.I. Contour Plot

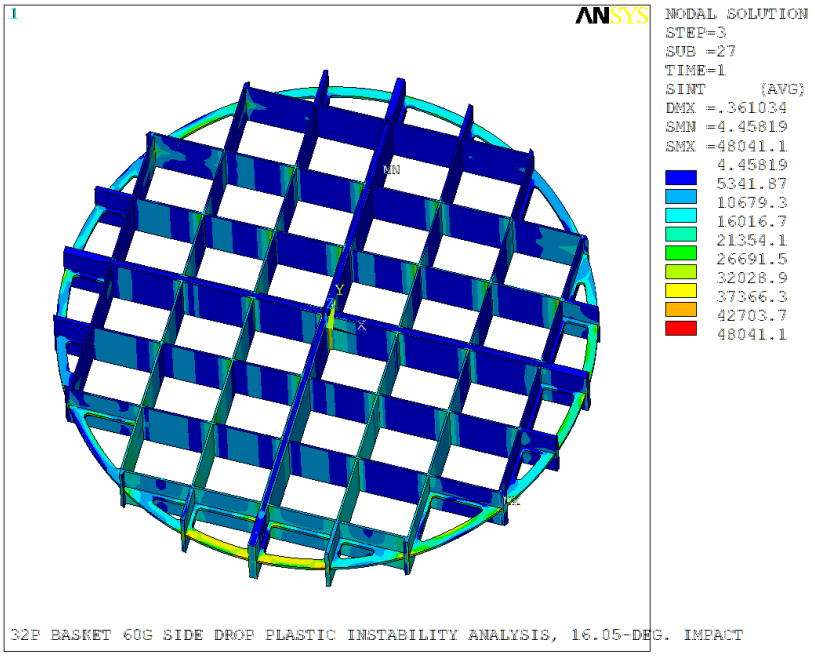

Figure 4-17. 32P Basket 60*g* 16° Side Drop S.I. Contour Plot

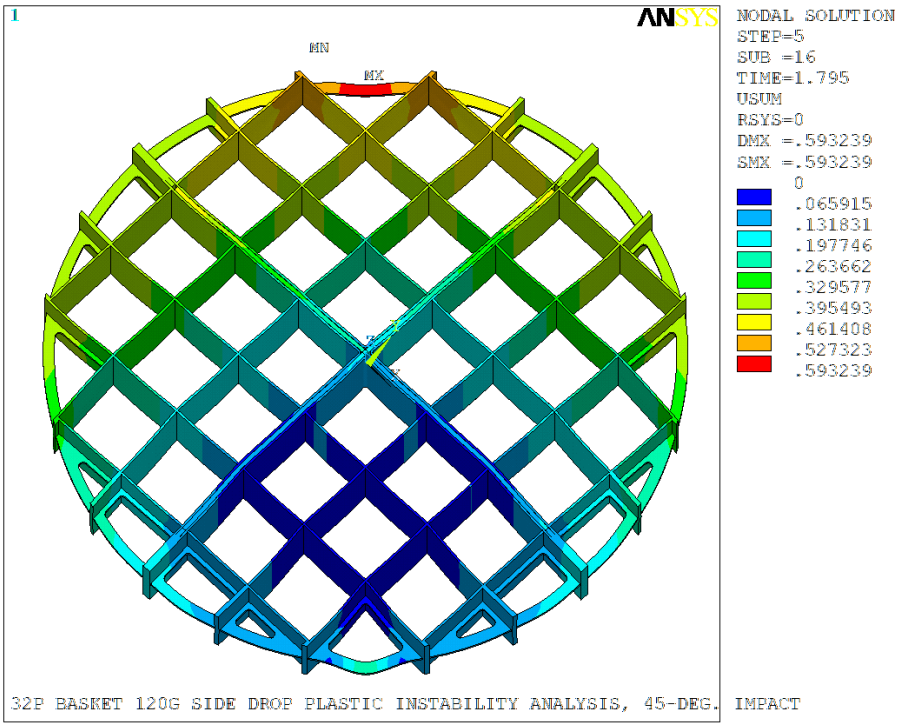

Note: Deformed Shape shown magnified 5×

Figure 4-18. 32P 45° Side Drop Deformations Preceding Plastic Instability

4.3.1.2.2 *28P Basket Structural Analyses*

The structural analyses of the 28P basket assembly are performed using the ANSYS general-purpose finite element analysis program. The three-dimensional FE model shown in Figure 4-19 is used for both the stress and plastic instability analyses. The FE model represents a periodic axial segment of the full 28P basket cross-section at the mid-length of the basket assembly where the axial spacing of the edge gusset plates is largest and consequently the maximum stresses will occur. The axial segment extends a total length of 4.5 inches, from the centerline of the gusset plates on the perimeter of the basket to the mid-length of the free-span between the adjacent line of gusset plates. The full cross-section model is used to evaluate four (4) different circumferential impact orientations for the HAC side drop; 0°, 8° ,25° and 45° relative to the basket centerline. Symmetry boundary displacement constraints are modeled at the axial ends of the model.

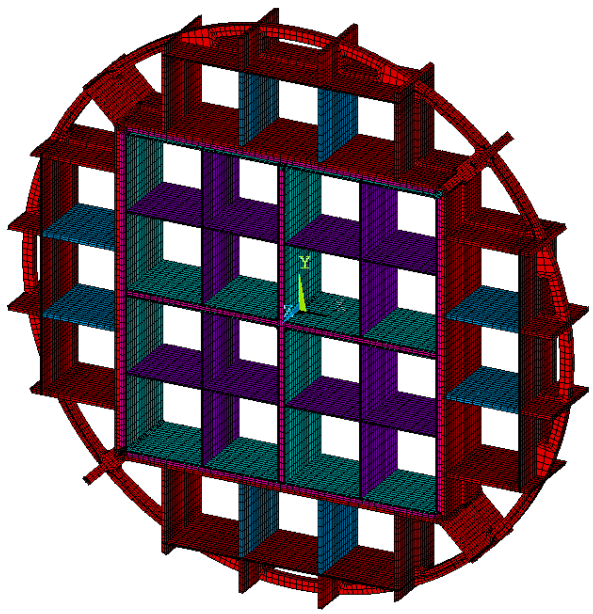

Figure 4-19. 28P Basket Structural Model

All structural plates of the basket assembly, including the ¼-inch thick center 4×4 egg-crate plates, ½-inch 1×3 perimeter egg-crate plates, and ½-inch thick poison plates are modeled using 3-D 8-node solid brick elements. The fuel assemblies and DFC assemblies are not explicitly modeled; instead the loading on the basket assembly structure from these items is modeled as uniform pressure loads on the supporting egg-crate plates. The tributary loads from the fuel assemblies and DFCs are the same as those used for the 32P basket analysis, as discussed in Section 4.3.1.2.1.

In addition, the neutron absorber plates, which are attached to the insides of the 16 inner 4x4 egg-crate cells and 4 of the 12 outer 1×3 egg-crate cells are not explicitly modeled; instead the density of the egg-crate plates that support the neutron absorber angles is increased to account for their mass, as discussed below. The nodes and elements at the locations of the welded connections between the various components of the basket assembly are merged, assuming

complete joint penetration welds or equivalent. The non-linear interfaces between the center plates and egg-crate plates are modeled using surface-to-surface contact elements and target elements. In addition, contact elements are used to model the non-linear interface between the basket edge support plates and the cask cavity.

The plastic behavior of the basket assembly SA-537 Class 1 carbon steel structural members is modeled using bilinear kinematic hardening, defined by the initial elastic modulus, yield strength, and tangent modulus, as defined in Table 4-15 (see Section 4.3.1.2.1). These properties are defined at two different temperatures; 700°F for the basket interior and 500°F for the basket perimeter. The carbon steel components of the basket assembly are modeled with a density of 0.284 lb/in^3 and Poisson's ratio of 0.3. For the egg-crate plates that support the neutron absorber angles, the material density is increased to 0.340 lb/in^3 to account for the mass of the neutron absorber plates which are not explicitly modeled.

For each of the four side drop impact orientations evaluated, a non-linear large deflection plastic-system analysis is performed. The 60*g* HAC side drop design loading is gradually applied to determine the maximum stresses. The loading is then increased to 90*g* (i.e., 150% of the 60*g* HAC side drop load) to demonstrate compliance with the plastic instability buckling design criteria.

The results of the 28P basket assembly HAC side drop stress analyses, which are summarized in Table 4-17, demonstrate that the 28P basket assembly satisfies the plastic-system analysis design criteria of ASME Appendix F, Article F-1341.2 for all impact orientations evaluated. The maximum primary membrane (P_m) stress intensity results from the 45° impact orientation and occurs in the outer ligament of the gusset plate nearest to the point of impact. The maximum general primary ($P_L + P_b$) stress intensity results from the 0° impact orientation and occurs in the outer ligament of the gusset plate nearest to the point of impact. Stress intensity contour plots for the 0° and 45° impact orientations are shown in Figure 4-20 and Figure 4-21, respectively. Both maximum stresses occur at the periphery of the basket assembly.

Table 4-17. 28P Basket HAC Side Drop Stress Analysis Results

Impact Angle	Stress Type	Maximum S.I. (ksi)	Allowable S.I. (ksi)
0°	P_m	32.8	47.9
	$P_L + P_b$	46.8[1]	61.6
8°	P_m	28.8	47.9
	$P_L + P_b$	45.5[1]	61.6
25°	P_m	33.2	47.9
	$P_L + P_b$	46.6[1]	61.6
45°	P_m	33.7	47.9
	$P_L + P_b$	45.6[1]	61.6

Notes:

1. The highest stress intensity occurring anywhere in the model is conservatively reported as the maximum membrane plus bending stress intensity.

The results of the plastic instability analyses demonstrate that the 28P basket remains structurally stable for HAC side drop loading up to 90*g* (i.e., 150% of the 60*g* HAC side drop loading) for all four impact orientations evaluated. The results indicate that the limiting member for all impact orientations is the outer ligaments on the gusset plates. The lowest plastic instability load for the 28P basket assembly is 2.26 (corresponding to a side drop load of 136*g*), resulting from the 45° impact orientation. The deformed shape of the 28P basket assembly immediately preceding the plastic instability is shown in Figure 4-22. Therefore, the results demonstrate that the 28P basket assembly satisfies the applicable buckling design criteria for the 60*g* HAC side drop.

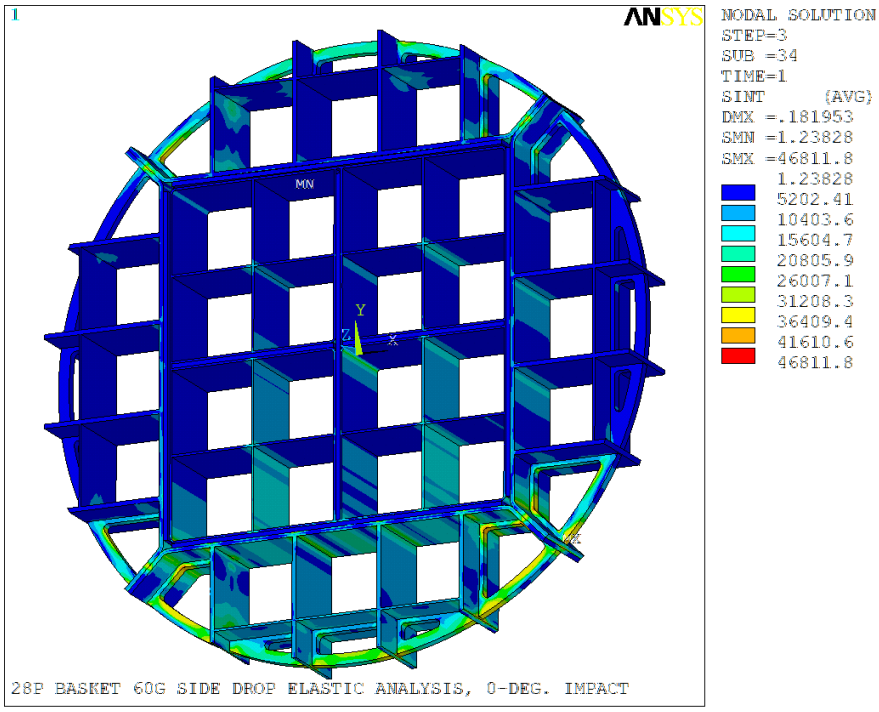

Figure 4-20. 28P Basket 60*g* 0° Side Drop S.I. Contour Plot

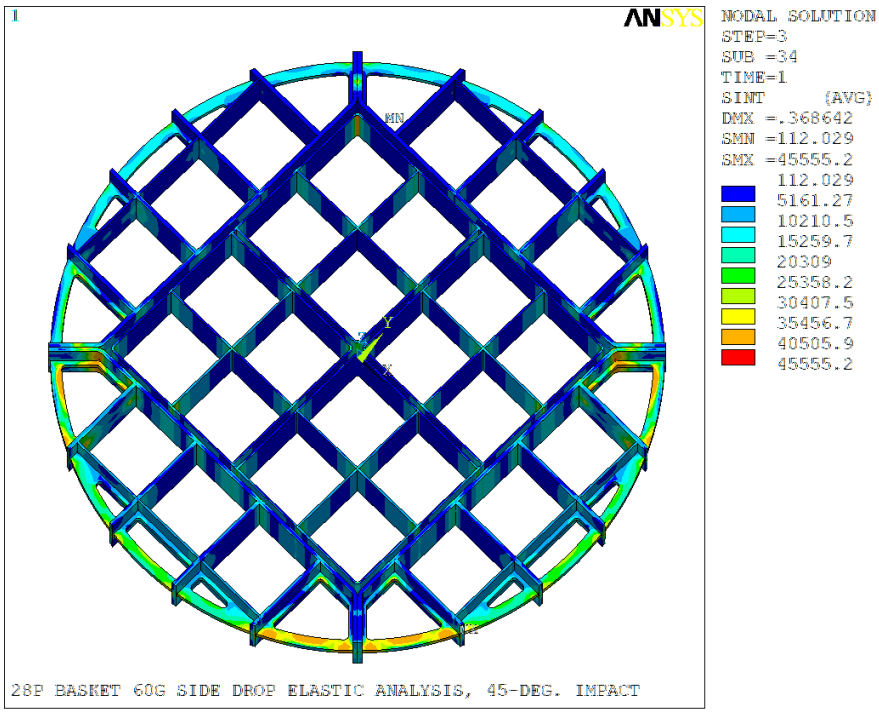

Figure 4-21. 28P Basket 60*g* 45° Side Drop S.I Contour Plot

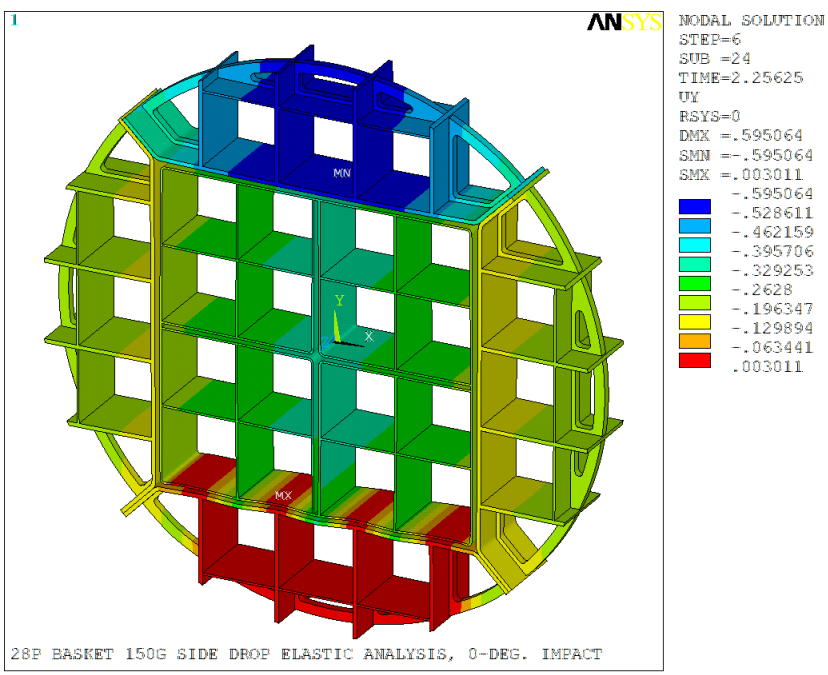

Figure 4-22. 28P 0° Side Drop Deformation Preceding Plastic Instability Load

4.3.1.2.3 *68B Basket Structural Analyses*

The structural analysis of the 68B basket assembly spacer plate is performed using the ANSYS general-purpose finite element analysis program. The three dimensional FE model shown in Figure 4-23 is used for both the stress and plastic instability analyses. The FE model represents the most heavily loaded interior spacer plate at the mid-length of the 68B basket where the axial spacing of the edge gusset plates is largest and consequently the maximum stresses will occur. The model is used to evaluate four (4) different circumferential impact orientations for the HAC side drop; 0°, 13°, 27° and 45° relative to the basket centerline.

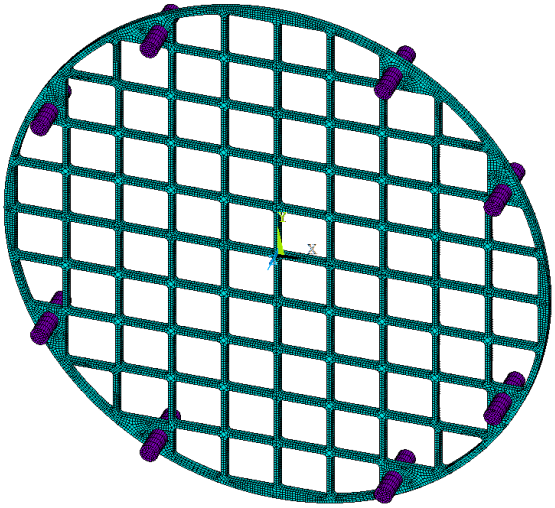

Figure 4-23. 68B Spacer Plate Structural Model

The fuel assemblies, guide tubes, and DFC assemblies are not explicitly modeled; instead the loading on the spacer plate from these items is modeled as uniform pressure loads on the supporting spacer plate ligaments. The heaviest BWR assembly weighs 706 pounds and has an overall length of nearly 180 inches, resulting in an average line load of 3.92 lb/inch. However, an upper bound line load of 4.0 lb/inch is conservatively assumed for the fuel assembly. The line load used for the guide tubes inside the small cell openings and the DFCs inside the eight perimeter cells, both of which have a 5.85-inch square inside dimension and a 0.0595-inch thick wall, is 0.40 lb/inch. The line load used for the guide tubes in the eight perimeter cells that are designed to accommodate DFCs, which have a 6.15-inch square inside dimension and a 0.0595-inch thick wall, is 0.42 lb/inch. In addition, the neutron absorber plates, which are captured by the guide tubes in the spans between spacer plates, are not explicitly modeled; instead the tributary weight of the poison egg-crates is modeled as a uniform pressure load on the supporting spacer plate ligaments. The line load for the poison plate is modeled as 0.43 lb/inch for each cell. Based on these line loads, the total tributary weight applied to each of the 60 basket cells for intact fuel and the 8 basket cells for DFC are 43.65 pounds and 47.25 pounds, respectively. The non-linear interfaces between the perimeter of the spacer plate and the cask cavity are modeled using 2-D node-to-node contact (gap) elements.

The plastic behavior of the spacer plate SA-517 Grade F or P carbon steel spacer plate material is modeled using a bilinear isotropic hardening, summarized in Table 4-18, defined by the stress

and strain at the material yield and ultimate strength at an assumed average spacer plate temperature of 600°F. The carbon steel components of the basket assembly are modeled with a density of 0.284 lb/in^3 and Poisson's ratio of 0.3. The support rods, which are fabricated from SA-479, Type XM-19 stainless steel, are modeled with linear elastic material properties corresponding to an assumed temperature of 400°F near the periphery of the basket. These material properties consist of an elastic modulus of 24.8 ×10^6 psi, Poisson's ratio of 0.3, and an adjusted density (to account for the mass of the support sleeves which are not explicitly modeled) of 0.43 lb/in^3.

For each of the four side drop impact orientations evaluated, a non-linear large deflection plastic-system analysis is performed. The 60*g* HAC side drop design loading is gradually applied to determine the maximum stresses. The loading is then increased to 90*g* (i.e., 150% of the 60*g* HAC side drop load) and beyond to demonstrate compliance with the plastic instability buckling design criteria.

Table 4-18. Plastic Material Properties for SA-517 Grades F or P Carbon Steel

Point	Strain (in./in.)	Stress (psi)
Yield	0.0032	85,500
Ultimate 0.16	0.16	115,000

The results of the 68B spacer plate HAC side drop stress analyses, which are summarized in Table 4-19, demonstrate that the 68B basket assembly satisfies the plastic-system analysis design criteria of ASME Appendix F, Article F-1341.2 for all impact orientations evaluated. The maximum primary membrane (P_m) stress intensity results from the 0° impact orientation and occurs in the outer edge of the spacer plate. The maximum general primary ($P_L + P_b$) stress intensity results from the 27° impact orientation and occurs in a ligament near the center of the spacer plate. Stress intensity contour plots for the 0° and 27° impact orientations are shown in Figure 4-24 and Figure 4-25, respectively. Both maximum stresses occur at the periphery of the basket assembly.

Table 4-19. 68B Basket HAC Side Drop Stress Analysis Results

Impact Angle	Stress Type	Maximum S.I. (ksi)	Allowable S.I. (ksi)
0°	P_m	44.9	80.5
	$P_L + P_b$	77.2[1]	103.5
15°	P_m	43.5	80.5
	$P_L + P_b$	82.2[1]	103.5
30°	P_m	40.0	80.5
	$P_L + P_b$	85.5[1]	103.5
45°	P_m	36.4	80.5
	$P_L + P_b$	84.3[1]	103.5

Notes:

1 The highest stress intensity occurring anywhere in the model is conservatively reported as the maximum membrane plus bending stress intensity.

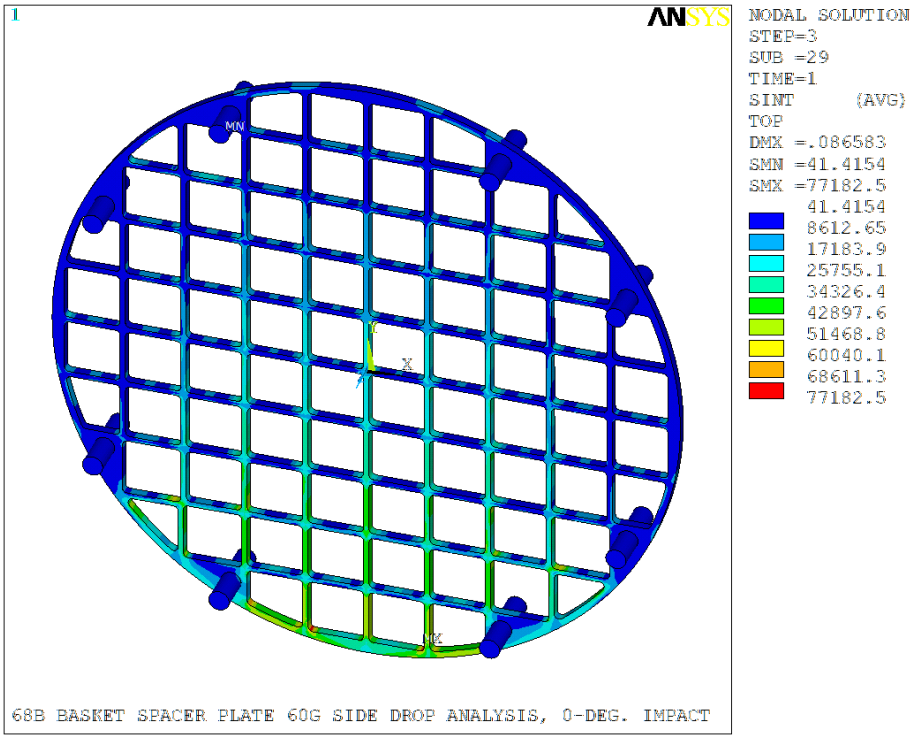

Figure 4-24. 68B Basket 60*g* 0° Side Drop S.I. Contour Plot

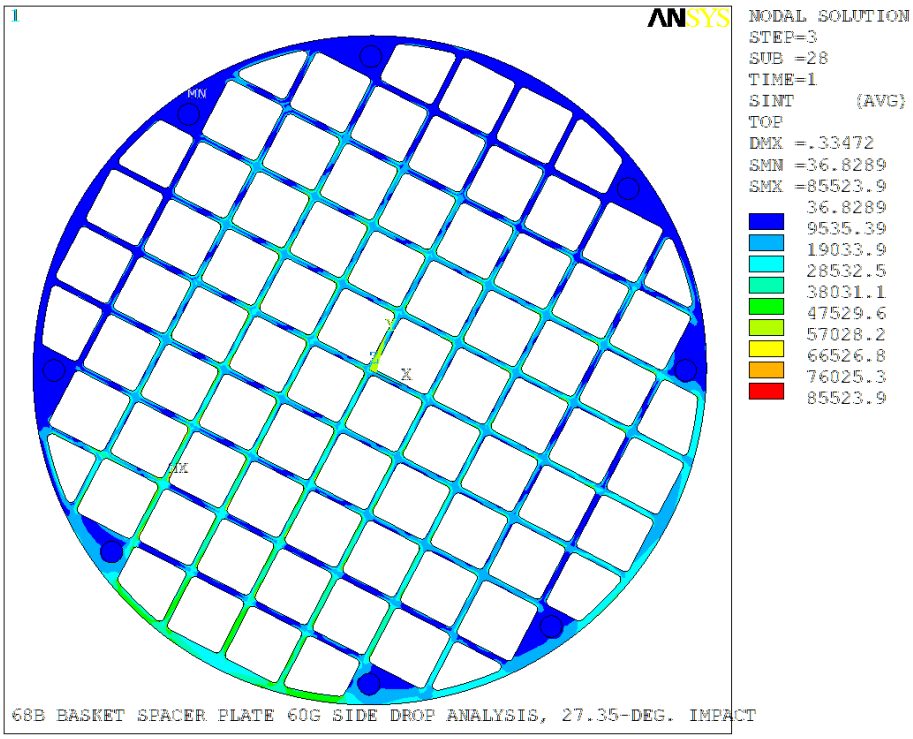

Figure 4-25. 68B Basket 60*g* 27° Side Drop S.I. Contour Plot

The results of the plastic instability analyses demonstrate that the 68B basket remains structurally stable for HAC side drop loading up to 90*g* (i.e., 150% of the 60*g* HAC side drop loading) for all four impact orientations evaluated. The lowest plastic instability load for the 68B basket assembly is 1.97 (corresponding to a side drop load of approximately 118*g*), resulting from the 27° impact orientation. The deformed shape of the 68B basket assembly immediately preceding the plastic instability is shown in Figure 4-26. Therefore, the results demonstrate that the 68B basket assembly satisfies the applicable buckling design criteria for the 60*g* HAC side drop.

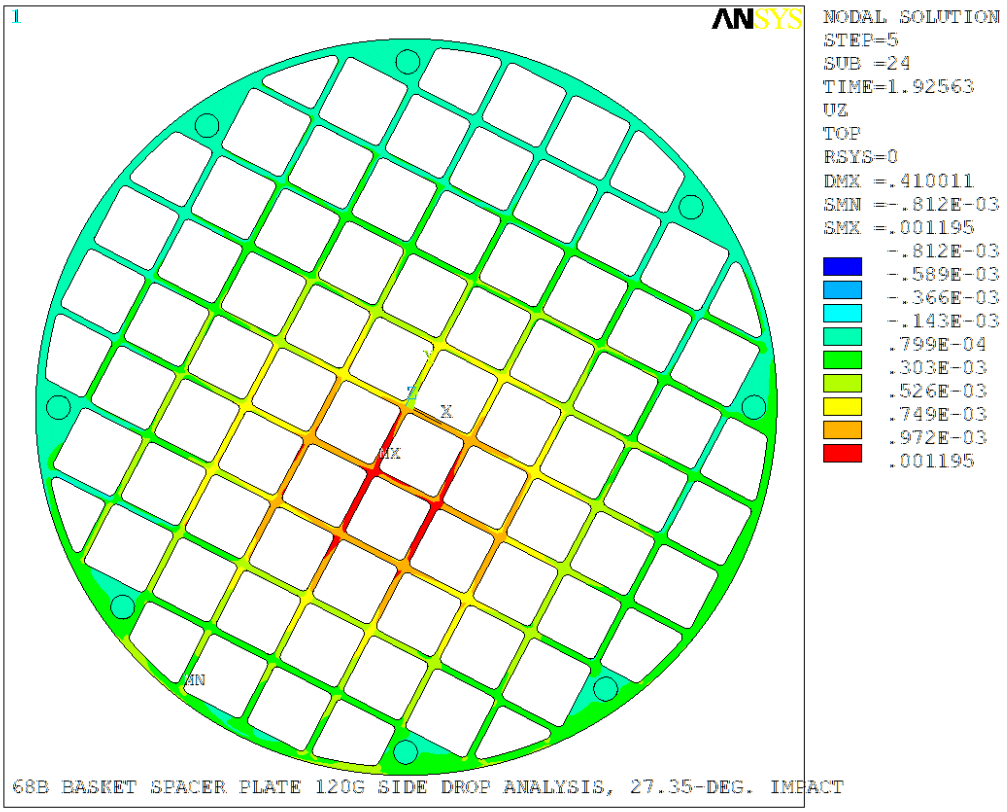

Figure 4-26. 68B 27° Side Drop Deformations Preceding Plastic Instability Load

4.3.1.2.4 *61B Basket Structural Analyses*

The structural analysis of the 61B basket assembly spacer plate is performed using the ANSYS general-purpose finite element analysis program. The three dimensional FE model shown in Figure 4-27 is used for both the stress and plastic instability analyses. The FE model represents the most heavily loaded interior spacer plate at the mid-length of the 61B basket where the axial spacing of the edge gusset plates is largest and consequently the maximum stresses will occur. The model is used to evaluate four (4) different circumferential impact orientations for the HAC side drop; 0°, 21°, 35° and 45° relative to the basket centerline.

The fuel assemblies, guide tubes, and DFC assemblies are not explicitly modeled; instead the loading on the spacer plate from these items is modeled as uniform pressure loads on the supporting spacer plate ligaments. The heaviest BWR assembly weighs 706 pounds and has an overall length of nearly 180 inches, resulting in an average line load of 3.92 lb/inch. However, an upper bound line load of 4.0 lb/inch is conservatively assumed for the fuel assembly. The line loads used for the DFCs, which have a 5.85-inch square inside dimension and a 0.0595-inch thick wall, is 0.40 lb/inch. The line load used for the guide tubes, which have a 6.15-inch square inside dimension and a 0.0595-inch thick wall, is 0.42 lb/inch. In addition, the neutron absorber plates, which are captured by the guide tubes in the spans between spacer plates, are not explicitly modeled; instead the tributary weight of the poison egg-crates is modeled as a uniform pressure load on the supporting spacer plate ligaments. The line load for the poison plate is modeled as 0.43 lb/inch for each cell. Based on these line loads, the total tributary weight applied to each cells is 47.25 pounds. The non-linear interfaces between the perimeter of the spacer plate and the cask cavity is modeled using 2-D node-to-node contact (gap) elements

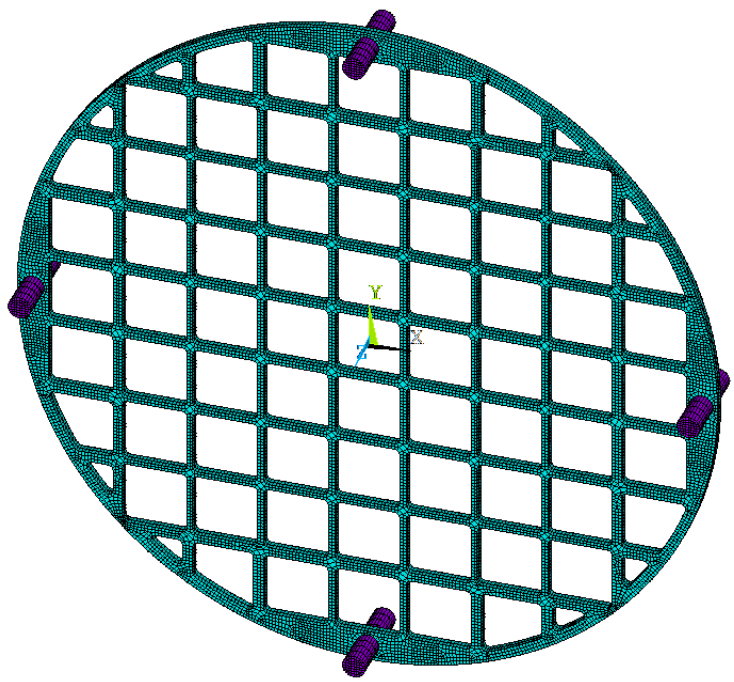

Figure 4-27. 61B Spacer Plate Structural Model

The plastic behavior of the spacer plate SA-517 Grade F or P carbon steel spacer plate material is modeled using a bilinear isotropic hardening summarized in Table 4-20, defined by the stress and strain at the material yield and ultimate strength at an assumed average spacer plate temperature of 600°F. The carbon steel components of the basket assembly are modeled with a density of 0.284 lb/in^3 and Poisson's ratio of 0.3. The support rods, which are fabricated from SA-479, Type XM-19 stainless steel, are modeled with linear elastic material properties corresponding to an assumed temperature of 400°F near the periphery of the basket. These material properties consist of an elastic modulus of 24.8 $\times 10^6$ psi, Poisson's ratio of 0.3, and an adjusted density (to account for the mass of the support sleeves which are not explicitly modeled) of 0.43 lb/in^3.

Table 4-20. 61B Basket HAC Side Drop Stress Analysis Results

Impact Angle	Stress Type	Maximum S.I. (ksi)	Allowable S.I. (ksi)
0°	P_m	40.5	80.5
	$P_L + P_b$	95.2[1]	103.5
21°	P_m	37.7	80.5
	$P_L + P_b$	92.8[1)]	103.5
35°	P_m	37.4	80.5
	$P_L + P_b$	93.0[1]	103.5
45°	P_m	28.7	80.5
	$P_L + P_b$	92.3[1]	103.5

Notes:

1. The highest stress intensity occurring anywhere in the model is conservatively reported as the maximum membrane plus bending stress intensity.

For each of the four side drop impact orientations evaluated, a non-linear large deflection plastic-system analysis is performed. The 60*g* HAC side drop design loading is gradually applied to determine the maximum stresses. The loading is then increased to 90*g* (i.e., 150% of the 60*g* HAC side drop load) and beyond to demonstrate compliance with the plastic instability buckling design criteria.

The results of the 61B spacer plate HAC side drop stress analyses, which are summarized in Table 4-20, demonstrate that the 61B basket assembly satisfies the plastic-system analysis design criteria of ASME Appendix F, Article F-1341.2 for all impact orientations evaluated. The maximum primary membrane (P_m) stress intensity results from the 0° impact orientation and occurs in the outer edge of the spacer plate. The maximum general primary ($P_L + P_b$) stress intensity results from the 35° impact orientation and occurs at the outer edge of the spacer plate. Stress intensity contour plots for the 0° and 35° impact orientations are shown in Figure 4-28 and Figure 4-29, respectively. Both maximum stresses occur at the periphery of the basket assembly.

The results of the plastic instability analyses demonstrate that the 61B basket remains structurally stable for HAC side drop loading up to 90*g* (i.e., 150% of the 60*g* HAC side drop loading) for all four impact orientations evaluated. The lowest plastic instability load for the 61B basket assembly is 1.62 (corresponding to a side drop load of approximately 97*g*), resulting from the 45° impact orientation. The deformed shape (out-of-plane deformation) of the 61B basket assembly immediately preceding the plastic instability is shown in Figure 4-30. The results show that the controlling buckling mode for the 61B spacer plates is a global out-of-plane buckling mode. Therefore, the results demonstrate that the 61B basket assembly satisfies the applicable buckling design criteria for the 60*g* HAC side drop.

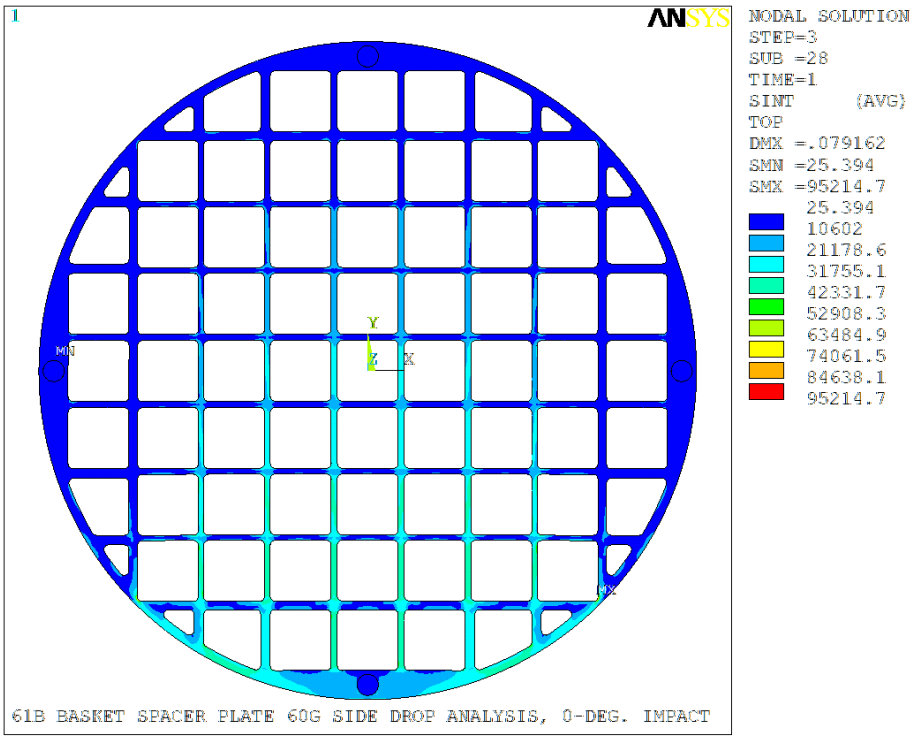

Figure 4-28. 61B Basket 60*g* 0° Side Drop S.I. Contour Plate

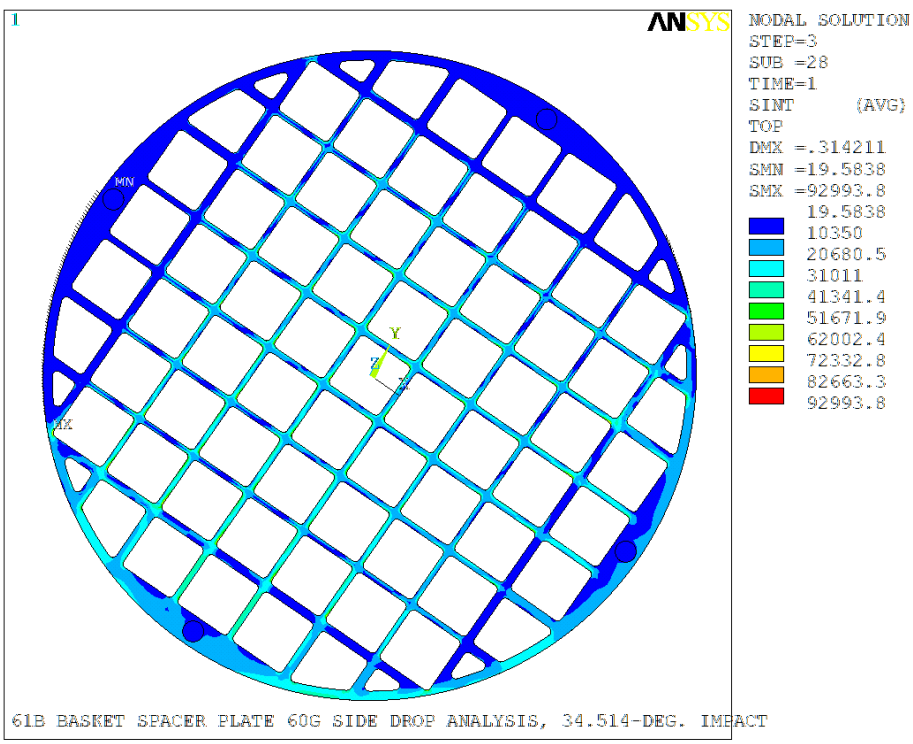

Figure 4-29. 61B Basket 60*g* 35° Side Drop S.I. Contour Plot

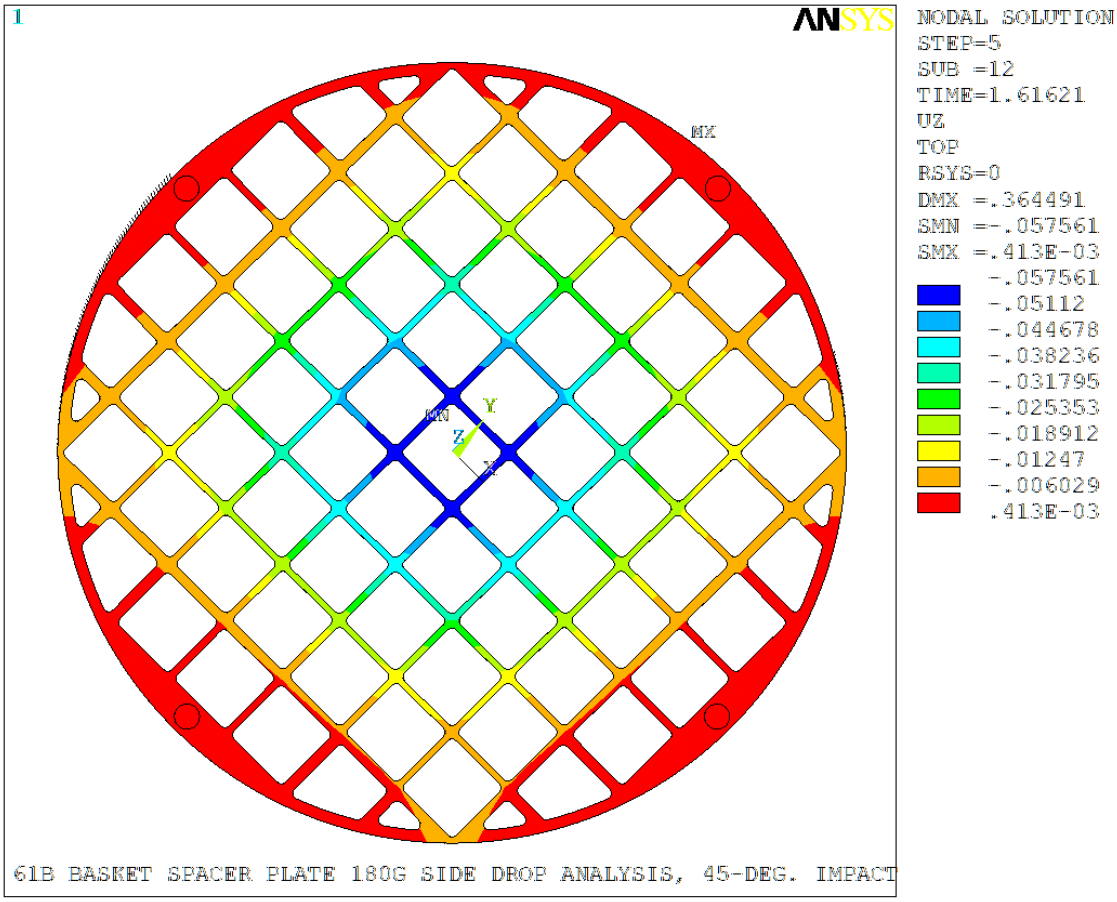

Figure 4-30. 61B 45° Side Drop Deformations Preceding Plastic Instability Load

4.3.2 **Thermal Analyses**

4.3.2.1 Transportation Cask

The transportation cask is designed as a conduction heat transfer device following the industry standard designs. This is due to the cask being horizontal for the primary portion of its design intent – transport. Many storage casks are able to use convective thermal heat transfer models due to their static position, vertical, during their service.

The thermal evaluation for the transportation cask is performed in ANSYS and reflects the placement of a heat flux developed for a tube and disk basket design. Primary areas of inspection in this evaluation are the peak temperatures within the neutron shield and the cask closure lid seal. Limits are restricted to 300ºF based on the licensed thermal performance of the neutron shield material, NS-4-FR and on the recommended steady service temperature of the ethylene propylene diene monomer (EPDM) closure lid seals. Table 4-21 presents areas of thermal performance of materials which may limit the cask's effective heat load.

Table 4-21. Thermal Performance of Materials

Component	Safe Operating Range
Lead Gamma Shield	-40 ºF to +600 ºF
Radial NS-4-FR Neutron Shield	-40 ºF to +300 ºF
EPDM O-Rings	-40 ºF to +300 ºF

The thermal assessment performed used both 24 kW and 28 kW thermal flux distributions on the cask cavity surfaces. Several permutations have been evaluated involving convection coefficients, solar insolance variations and increased number of heat fins. Although the design target is 24 kW, the 28 kW thermal load provides a sensitivity aspect to the analysis and also provides a relative temperature for the cask performance. The analysis primarily evaluates the peak temperatures of the neutron shielding material, external shell, internal shell and seal area temperatures. The range of analysis performed will allow for a certain degree of extrapolation of potential thermal performance for thicker fins, incremental addition of fins or thermal conductivity of the fin material.

Thermal conditions and assumptions:

- Steady state thermal evaluation in horizontal orientation
- Considers solar insolance and regulatory ambient conditions
- Assumes the cask cavity is backfilled with at least 1 atm Helium
- Utilizes basket "effective thermal properties" based on:
    - NAC-STC PWR High-Burnup thermal profile
    - NAC-UMS BWR thermal profile

The thermal model utilizes a full length 360^0 model of the cask generated to account for the asymmetry of the cask ends and the fin design. The thermal boundary conditions are shown in Figure 4-31 and Figure 4-32. Some additional details are:

- Air gaps are absent unless specifically noted
- The lid is treated as being in contact with the cask body

As noted above, the thermal design is targeted at maintaining the neutron shield material at temperatures less than 300 ºF. Variations in the selected copper alloy may have some impact on the thermal performance of the cask. Another thermal performance variance is tied to the change of effective volume of the fins. Modifications in this area can be achieved by either increasing the fin thickness, e.g. change from ¼″ to 5/16″ or increase the number of fins from 24 to 32. There is also the potential for the development of a neutron shielding material capable of handling temperatures of up to 356 ºF. Either of these paths or combinations of both can provide further assurance of the 24 kW performance or provide the potential to increase the cask thermal capacity. For the analysis runs at 28 kW, indications are temperatures are beyond the target of 300 ºF. Although this exceeds the noted performance criteria, possible variations in the fins and even a possible performance increase in the neutron shield material could allow increased thermal loads.

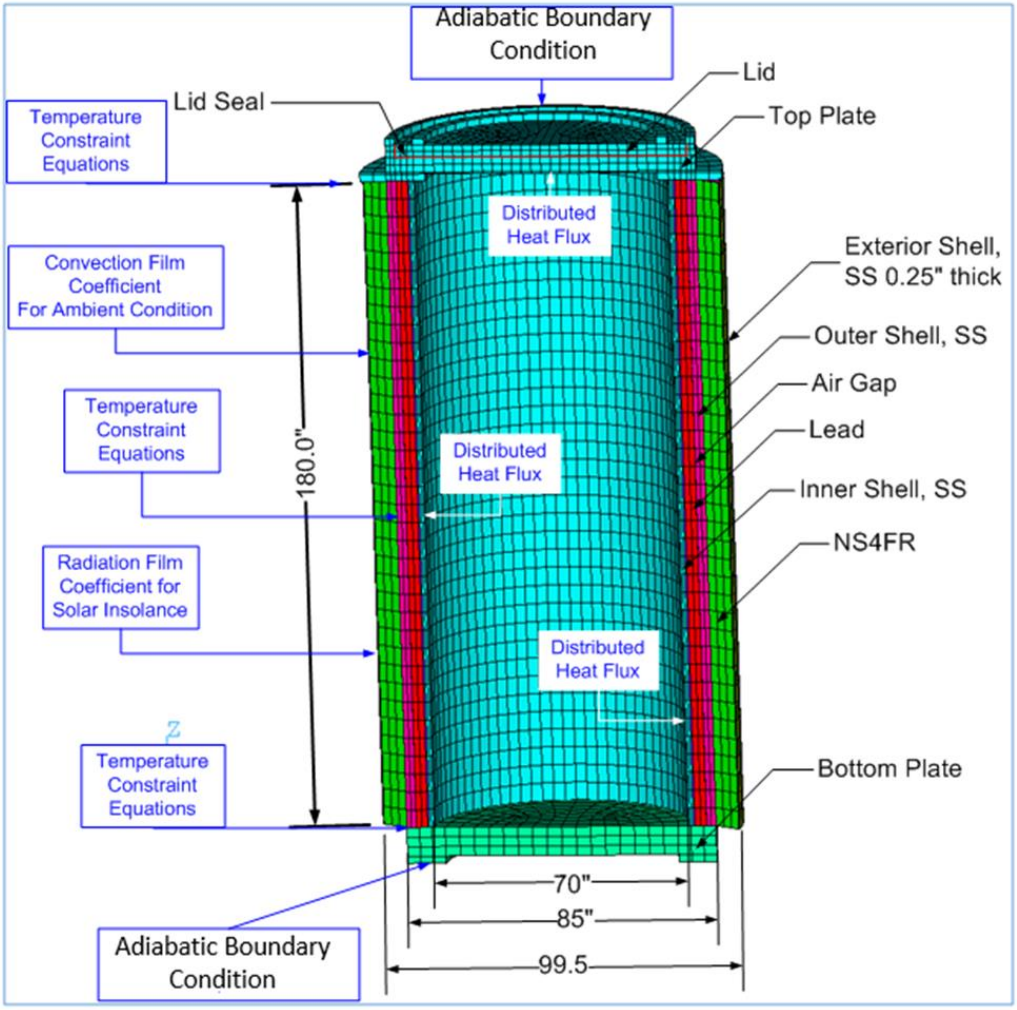

Figure 4-31. Thermal Boundary Conditions – Side View

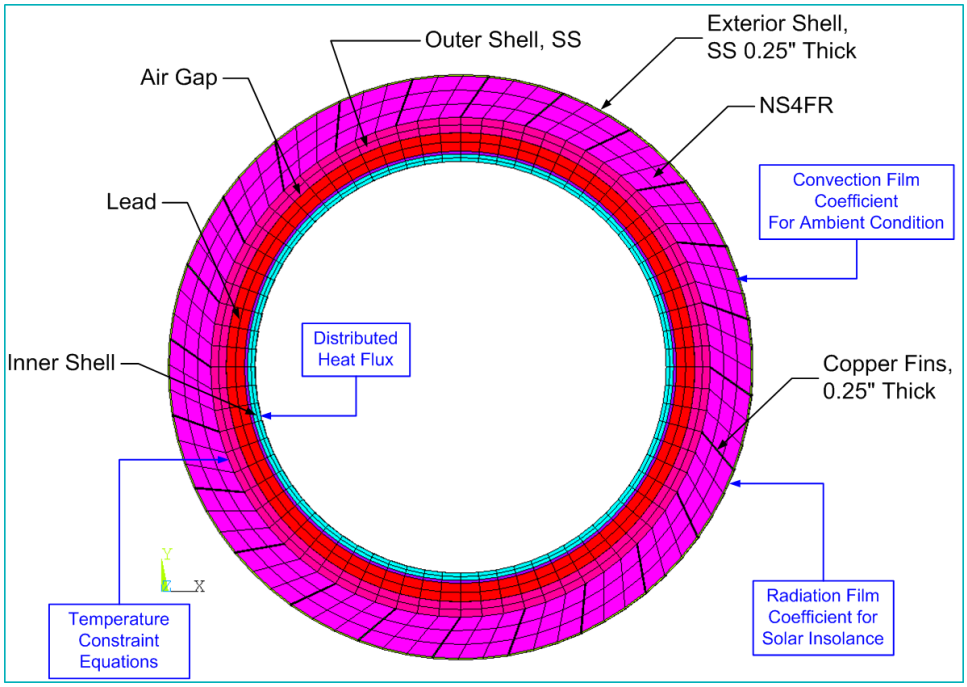

Figure 4-32. Thermal Boundary Conditions – End View

Methodology

The interior inner shell surface temperature distribution corresponds to that of a tube and disk design (NAC-STC HBU). The thermal flux applied to the inner surface was allowed to vary axially and circumferentially with the axial peak temperature depending on the location of the fuel in the cask body.

Following the completion of the runs, the data was examined with respect to the areas of attention, NS-4-FR and cask lid seal area, to ensure the cask was meeting material and operational limits. Figure 4-33 demonstrates the thermal gradients in a half-symmetry model for the PWR thermal profile. Figure 4-33 shows that the PWR thermal profile, for a uniform thermal load, is biased to the lower half of the transport cask and will result in higher fin/NS-4-FR temperatures as indicated in Figure 4-34.

Figure 4-35 is a local evaluation of the area in the upper forging where the cask lid seal resides. In this PWR 24 kW case, the peak temperature is in the 250 ºF range and appears to be sufficient. Further analysis would include the fire accident case which allows a higher short term temperature limit for the seal, but exposes the seal area to a large external heat flux.

Figure 4-36 looks specifically at the junction of the thermal fins and the neutron shield shell. Temperatures in this region exceed the limit of 185 ºF, thereby imposing a personnel barrier. This is of little significance, as the personnel barrier is already utilized to further meet dose limits on the “package”.

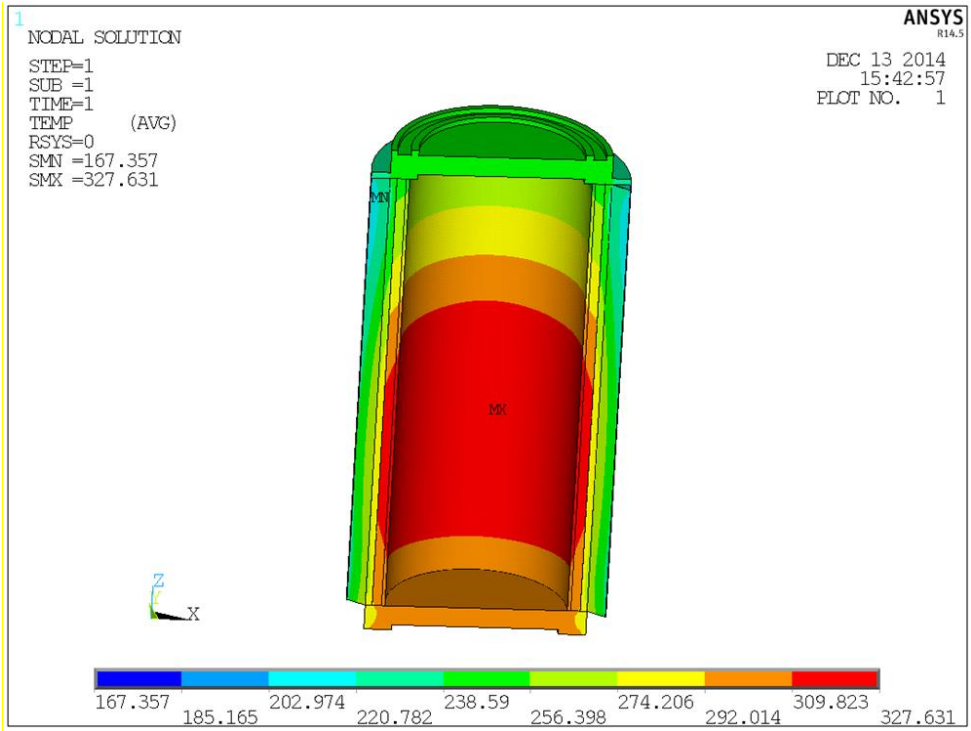

Figure 4-33. Thermal Gradients – Half-Symmetry Model for PWR Thermal Profile

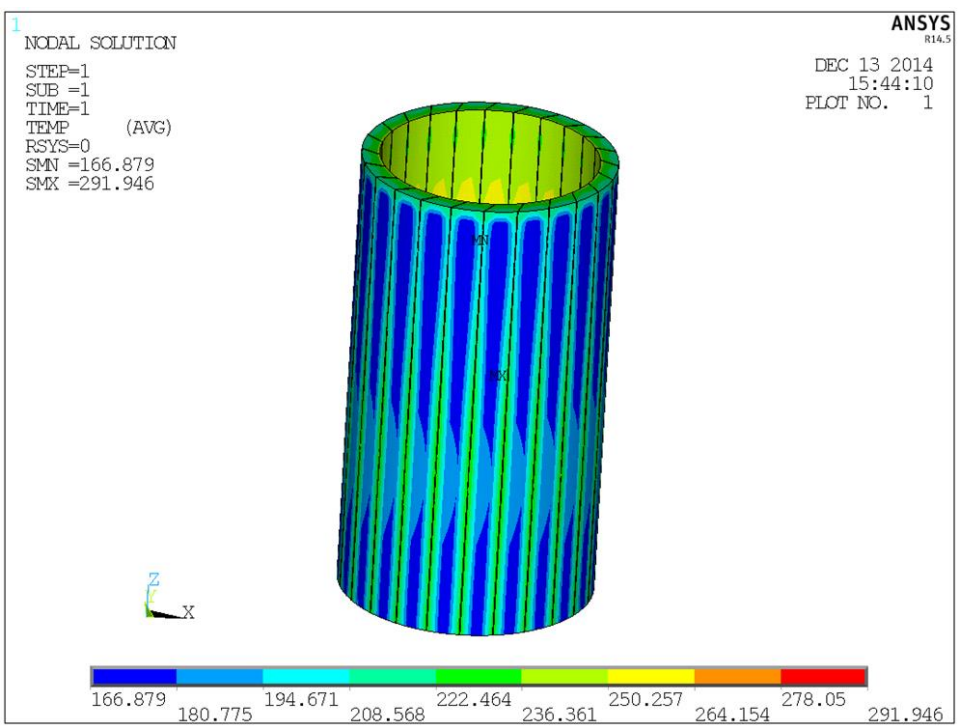

Figure 4-34. Fin/NS-4-FR Temperatures - PWR

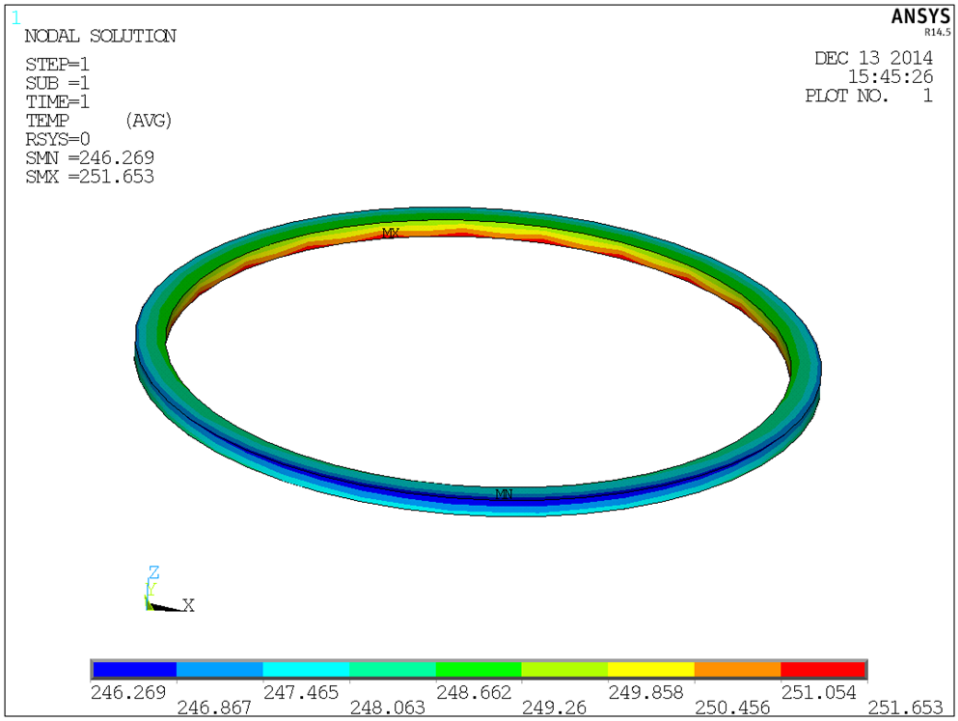

Figure 4-35. Evaluation of Upper Forging Area

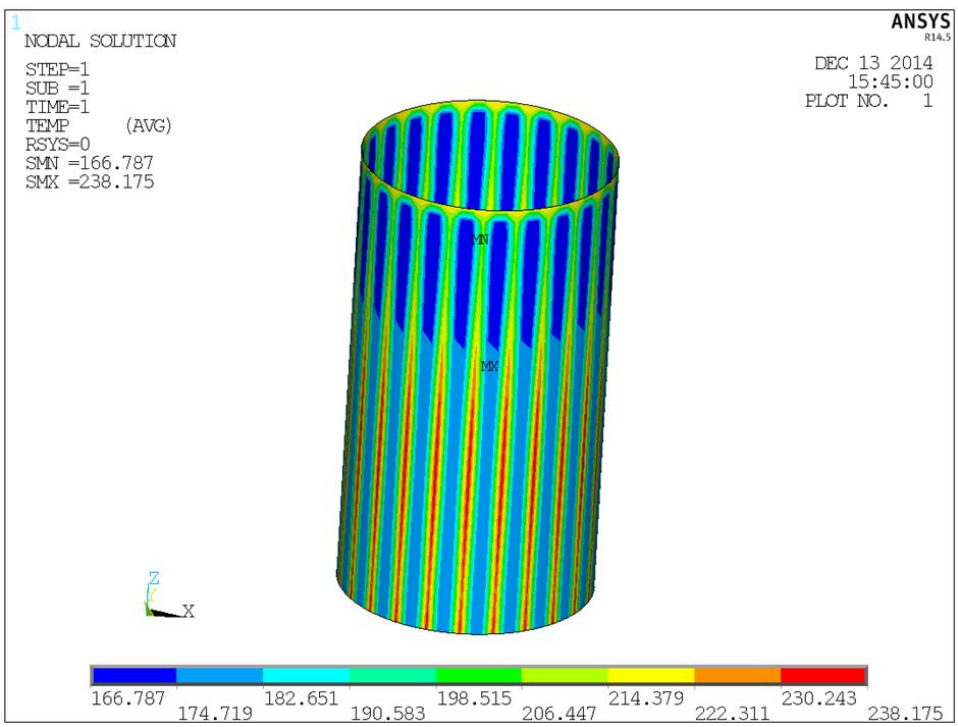

Figure 4-36. Evaluation of Junction of Thermal Fins and Neutron Shield Shell

BWR Thermal Profile

The BWR thermal performance is based on using similar thermal loads (NAC-UMS tube-and-disk). The distribution of temperatures is influenced as shown in the following figures (Figure 4-37 and Figure 4-38). In general, the seal areas of the cask increase slightly and the overall fin and fin/neutron shield temperatures decrease slightly. As the cask is designed for the full length BWR thermal loads, the results demonstrate a more even distribution over the length of the cask. Similar results are shown for the cask exterior surfaces.

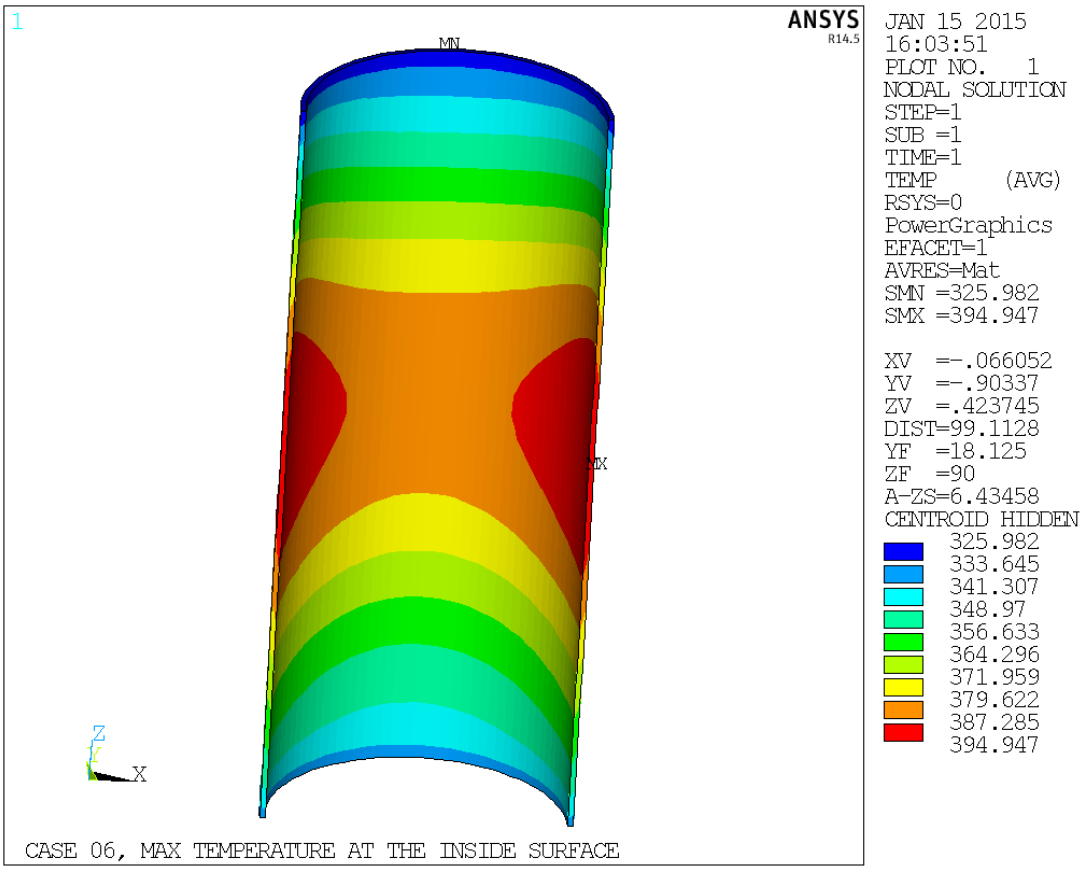

Figure 4-37. Thermal Gradients – Half-Symmetry Model for BWR Thermal Profile

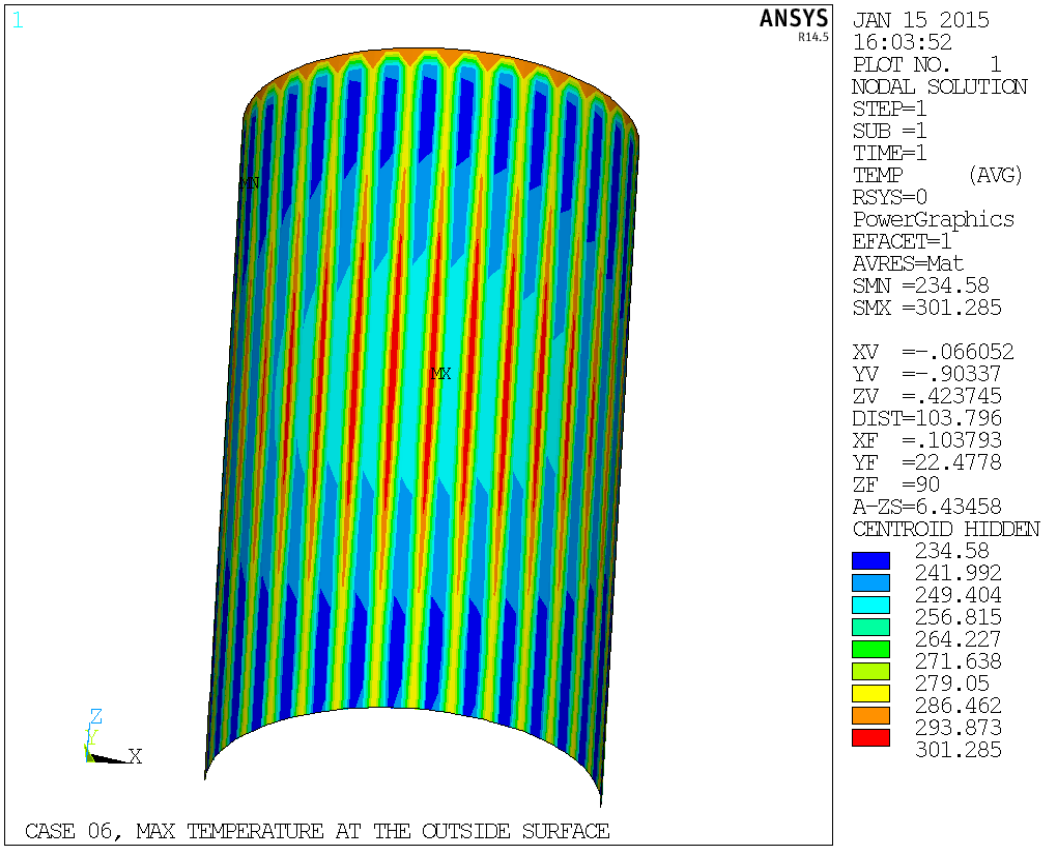

Figure 4-38. Fin/NS-4-FR Temperatures - BWR

Conclusions

The cask performs thermally, as expected, within the general heat flux limitations available at this time. During final design and analysis, it is expected that the basket designs will provide better axial distribution than that used in the models (i.e. tube and disk) allowing slightly better thermal performance by developing a more uniform or stretching of the thermal gradients for greater distribution.

Several cases have been evaluated in an effort to properly characterize the influence of additional thermal loads (28 kW) and analytical constraints such as convection coefficients and solar insolance. Also demonstrated are the effects of further enhancements of the cask body itself by investigating the effects of increased cooling fins. Table 4-22 provides the analytical basis and results for several "Cases" using varying the design features noted above.

NS-4-FR, as anticipated, is the temperature limiting component with results from 283 ºF to 370 ºF. With a neutron shield temperature limit of 300°F, even the best results are close to material limits.

Table 4-22. Cases and Temperatures – Summary

ANYSY Run Folder Name	Case 1	Case 2	Case 5	Case 6	Case 10a	Case 1a	Case 2a
Fuel Assembly	PWR	PWR	BWR	BWR	BWR	PWR	PWR
Total Heat Load (kW)	24	28	28	28	24	24	28
Number of Copper Fins	24	24	32	32	24	24	24
Copper Conductivity (Btu/hr –in- ºF)	18.58	18.58	18.58	18.58	18.58	18.58	18.58
Convection Correlation Coefficient	0.00302	0.00302	0.00302	0.00132	0.00132	0.00132	0.00132
Emissivity of the SS Shells	0.50	0.50	0.36	0.36	0.36	0.36	0.36
Total Heat Input from Solar Insolance (kW)	3.5	3.5	2.5	2.5	2.5	2.5	2.5
Maximum Temperature, Inner Shell	328 ºF	352 ºF	334 ºF	395 ºF	380 ºF	374 ºF	409 ºF
Maximum Temperature, NS4FR	292 ºF	311 ºF	283 ºF	343 ºF	338 ºF	339 ºF	370 ºF
Maximum Temperature, Seal	252 ºF	267 ºF	271 ºF	328 ºF	319 ºF	295 ºF	319 ºF
Maximum Temperature, Exterior	238 ºF	256 ºF	242 ºF	301 ºF	292 ºF	293 ºF	316 ºF

As shown in Table 4-22, there are also some temperature issues in the closure lid seal area that need to be addressed. The cask design is based on the use of polymer seals for containment based on their reusability and other operational costs. High resolution thermal analysis in combination with alternative design features can potentially provide solutions to these areas of interest. Any design enhancements would have to be balanced with the target package weight and shielding. Also, final analysis will need to include the evaluation of the Hypothetical Fire Accident for further validation of the polymer closure sealing method proposed.

The primary focus for the thermal evaluations of the transport cask is for NCT. Explicit areas of inspection within the thermal plots are the neutron shield and the closure seal areas. The results have shown the neutron shield is a primary restriction for heat loads in normal conditions and further work can be performed with respect to temperatures in the closure seal area. In accident conditions, it is assumed the neutron shield is damaged and a reduced property set is used for shielding.

NAC has found that the fire accident does not challenge the thermal properties of the cask and internals as much as the normal conditions. Allowable conditions with respect to the fuel and structural components, i.e. fuel Peak Clad Temps, for HAC are greater than that for NCT. As such, there is a high level of confidence that the cask design will meet HAC “fire accident” conditions with reasonable margins.

Potential paths for a more efficient heat transfer design and analytical basis:

- Impose cask thermal testing in support of using a more realistic "Convection Correlation Coefficient" (Case 1/1a and 2/2a demonstrate the effects of this analytical parameter). As indicated by the temperature values on the table, this area provides a great deal of temperature impact with reductions of approximately 46 ºF to 57 ºF. Note: Submittal of the NAC-MAGNATRAN cask did not use the enhanced coefficients noted as it uses external fins, but the NAC-UMS transport license does have the enhance coefficient as its license basis.
- Further increase the number or thickness of the copper fins (BWR Case 6 and Case 2a provide comparative results for this effect).
- Incorporate the potential neutron shielding material with a peak performance temperature of 350 ºF (currently in testing, not a currently licensed material).

It is expected that through the use of enhanced convection coefficient, the potential higher temperature neutron shield and a balance of number/thickness of fins will provide a realistic package for shipping 28 kW loads. Further design and analytical development of the fuel basket and cask body will provide additional margin for licensing ease.

4.3.2.2 Basket Thermal Analysis

Thermal analyses have been performed, using the ANSYS code, to calculate peak temperatures for the fuel assembly cladding and the (steel or borated aluminum) basket structures. A thermal analysis has been performed for each of the four proposed basket designs described in Section 4.1.2 (i.e., the 32P, 28P, 68B and 61B baskets).

The 32P analyses model eight DFCs containing assemblies in the periphery cells of the basket. The 68B analyses model eight DFCs in the periphery cells of the basket. The 28P and 61B analyses model DFCs in all basket cells.

For all baskets, the analyses model a horizontal slice through the axial center of the basket structure, and apply adiabatic boundaries on the axial ends of the slice. Therefore, the analyses effectively model an infinite height basket (and assembly fuel zone) structure, and thus conservatively neglect axial heat transfer and loss. All four baskets employ axially periodic structures such as spacer plates (for the BWR baskets) and edge gusset plates (for the PWR baskets) that occur at a regular axial spacing. To model these features, the (horizontal slice) basket models cover a finite axial span, extending from the axial center of a spacer (or gusset) plate, to a point halfway between spacer (or gusset) plates. This effectively models an infinite-height basket structure with the spacer/gusset plates occurring at a regular axial interval.

The axial heat generation (in watts/assembly-inch) modeled in these infinite-height analyses equates to the overall assembly heat generation levels given above. The axial heat generation levels are multiplied by 1.06 and 1.22, for PWR and BWR fuel, respectively, to conservatively account for the assembly's axial burnup profiles.

The analyses do not model the transportation cask, or the heat transfer through the transportation cask and out to the ambient environment. Instead, the analyses apply a fixed temperature of 330°F on the outer radial surface of the cask cavity, as a boundary condition. This temperature is

taken from the output of the transport cask thermal analysis (presented in Section 4 3.2.1.). The basket analyses conservatively use the peak cask cavity wall temperature that occurs at any axial location.

The analyses, for all four basket designs, model the fuel assemblies as a homogenous mass, which completely fills the loading cell and has an effective (temperature dependent) radial thermal conductivity. Effective assembly thermal conductivities are taken from previous, NRC-approved cask system licensing analyses. Specifically, the effective conductivities for PWR and BWR fuel assemblies were taken from Table 4.4-2 of the MAGNASTOR Final Safety Analysis Report (FSAR)[7] and from Appendix A of the VSC-24 FSAR[8], respectively.

The analyses model radiation heat transfer between the basket edge and the cask inner shell, based on an emissivity of 0.4 for the basket and cask shell material surfaces. The analyses also model convection in the spaces between the basket edge and the cask inner shell.

In addition to modeling the hottest axial section of the basket and neglecting axial heat transfer, the models assume the assemblies and basket components “float”, i.e. are centered within the spaces they lie in, which results in no thermal contact between components, and evenly distributed gaps around them. Thus, the results of these analyses are conservative.

For each basket, two payload heat generation distributions are evaluated. The first case models a uniform distribution of heat generation within all the cells of the basket (where the overall basket heat generation is set at 24 kW). For the 32P and 28P baskets, a PWR assembly heat generation level of 0.75 kW is modeled in each cell of the basket. For the 68B and 61B baskets, a BWR assembly heat generation level of 0.353 kW is modeled in each cell of the basket.

The second analysis models payload configurations where the heat generation is concentrated towards the basket center. These evaluations address (in a bounding fashion) the zone-loaded payload configurations allowed by the fuel specifications shown in Table 4-4. For the 32P and 28P baskets, a heat generation level of 2.0 kW is modeled in each of the center 12 basket cells. For the 68B basket, a heat load of 1.0 kW is conservatively modeled in the center 24 cells of the basket (the fuel specifications shown in Table 4-4 actually limit the cell heat generation level to 0.85 kW). For the 61B basket, the overall heat generation level of 24 kW is distributed over the 29 center cells of the basket. This results in a heat generation level of ~0.83 kW/cell (vs. the maximum specified allowable heat load of 0.85 kW). A non-symmetric distribution covering 28 cells with ~0.85 kW/cell would yield similar temperatures. In all four concentrated payload models, the remaining (periphery) cells contain no heat generation (since the center cells contain the entire allowable basket heat generation level of 24 kW).

---

[7] MAGNASTOR Final Safety Analysis Report, Revision 0, February 2009, NRC Docket No. 72-1301, NAC International.

[8] Final Safety Analysis Report for the VSC-24 Ventilated Storage Cask System, Revision 5, March 2003, NRC Docket No. 72-1007, BNFL Fuel Solutions Corporation.

For both the uniform and concentrated payload analyses, the per-cell heat generation levels (discussed above) are increased by 7% and 22%, for the PWR and BWR cases, respectively, to account for the axial burnup profile of the fuel assemblies.

The results of the thermal analyses, for the four basket designs are presented in Table 4-23, and in the sub-sections below. The criteria for the thermal analysis are that the peak fuel cladding temperature (i.e., the peak temperature that occurs anywhere in the model) must be less than 400°C (752°F), and that the peak steel and aluminum temperatures must be less than 700°F.

Table 4-23. Summary of Basket Thermal Analysis Results

	Uniform Payload [a]		**Concentrated Payload [b]**	
Basket	**Peak Assembly Cladding Temperature (°F)**	**Peak Basket Material Temperature [c] (°F)**	**Peak Assembly Cladding Temperature (°F)**	**Peak Basket Material Temperature [c] (°F)**
32P	584	556	720	648
28P	543	514	681	605
68B	608	588	665	634
61B	578	559	655	611
Temperature Limit	752 [d]	700 [e]	752 [d]	700 [e]

Notes:

a) The basket's overall 24 kW heat generation level is evenly divided among the basket cells.
b) The basket's 24 kW heat load is concentrated in the center 12, 12, 24,and 29 cells of the 32P, 28P, 68B, and 61B baskets, respectively.
c) These temperatures apply for both the structural steel material and the borated aluminum thermal/neutron absorption material (as those highly conductive materials are in close contact near the basket center)
d) Equals 400 °C
e) The 700 °F ASME code limit only applies for the steel structural materials. No structural credit is taken for the borated aluminum material.

<u>32P Basket</u>

The results of the uniform payload 32P basket thermal analysis are presented in Table 4-23 and illustrated in Figure 4-39. The peak temperature seen within any material, i.e., the peak assembly clad temperature is approximately 584°F, which is well below the maximum allowable clad temperature of 752°F. The peak structural steel and borated aluminum is 556°F, which is well under the allowable value of 700°F. Thus, the results show that the 32P basket can accommodate a uniform payload of PWR assemblies that has an overall heat generation level of

24 kW (i.e., a payload with 0.75 kW in each basket cell), and meet the thermal requirements by a wide margin.

The results of the concentrated payload heat generation case 32P basket thermal analysis are presented in Table 4-23 and are illustrated in Figure 4-40. The peak assembly cladding temperature is 720°F, which is under the 752°F clad temperature limit by a significant margin. The peak basket material temperature is 648°F, which is under the 700°F temperature limit by a significant margin. Thus, the results show that the 32P basket can accommodate even a concentrated payload of 2.0 kW PWR assemblies in the center 12 cells of the basket and meet the thermal requirements by a significant margin. That would allow 12 PWR assemblies with a burnup of 62.5 GWd/MTU and a cooling time of 5 years to be loaded into the 32P basket.

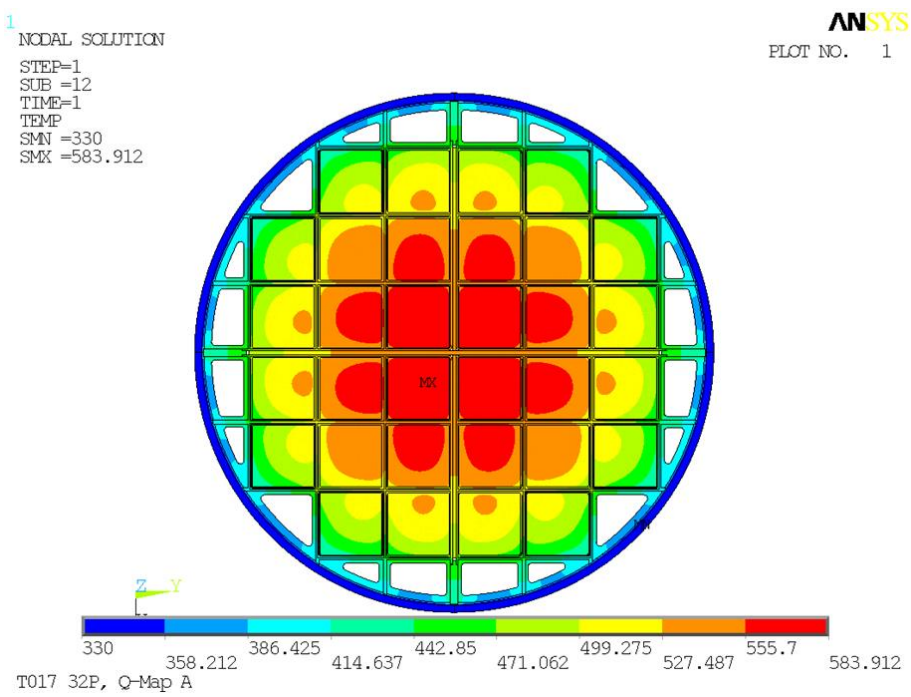

Figure 4-39. Basket and Assembly Material Temperature Distribution – 32P Basket – Uniform Payload

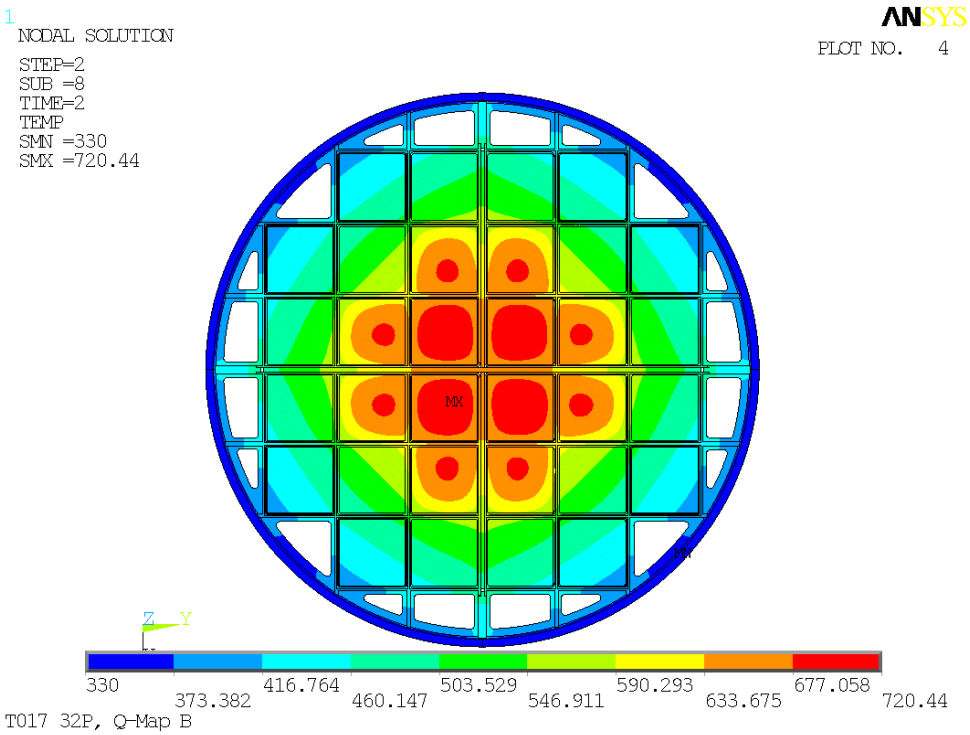

Figure 4-40. Basket and Assembly Material Temperature Distribution – 32P Basket – Concentrated Payload

<u>28P Basket</u>

The results of the uniform payload 28P basket thermal analysis are presented in Table 4-23 and illustrated in Figure 4-41. The peak assembly cladding temperature is 543°F, which is under the 752°F clad temperature limit by a wide margin. The peak basket material temperature is 514°F, which is under the 700°F temperature limit by a wide margin. Thus, the results show that the 28P basket can accommodate a uniform payload of PWR assemblies with 0.75 kW in each basket cell, and meet the thermal requirements by a wide margin.

The results of the concentrated payload heat generation case 28P basket thermal analysis are presented in Table 4-23 and are illustrated in Figure 4-42. The peak assembly cladding temperature is 681°F, which is under the 752°F clad temperature limit by a significant margin. The peak basket material temperature is 605°F, which is under the 700°F temperature limit by a significant margin. Thus, the results show that the 28P basket can accommodate even a concentrated payload of 2.0 kW PWR assemblies in the center 12 cells of the basket and meet the thermal requirements by a significant margin. That would allow 12 PWR assemblies with a burnup of 62.5 GWd/MTU and a cooling time of 5 years to be loaded into the 28P basket.

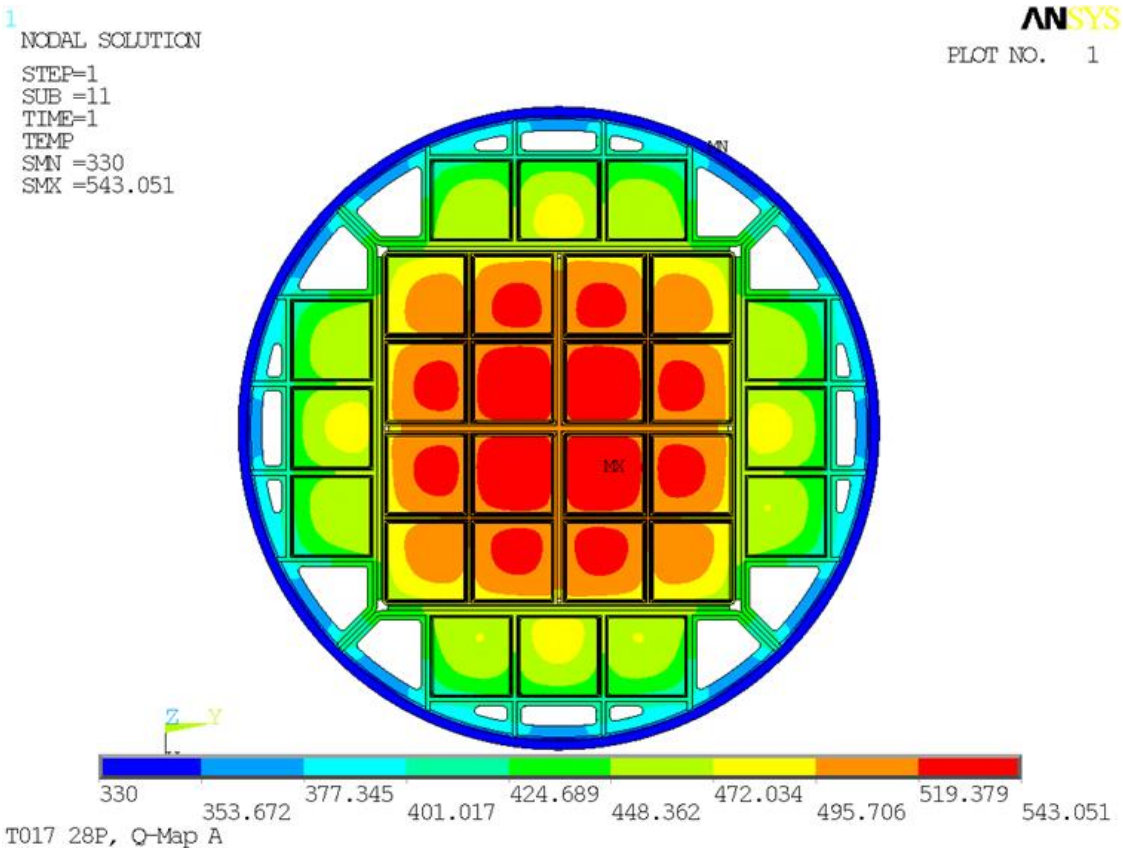

Figure 4-41. Basket and Assembly Material Temperature Distribution – 28P Basket – Uniform Payload

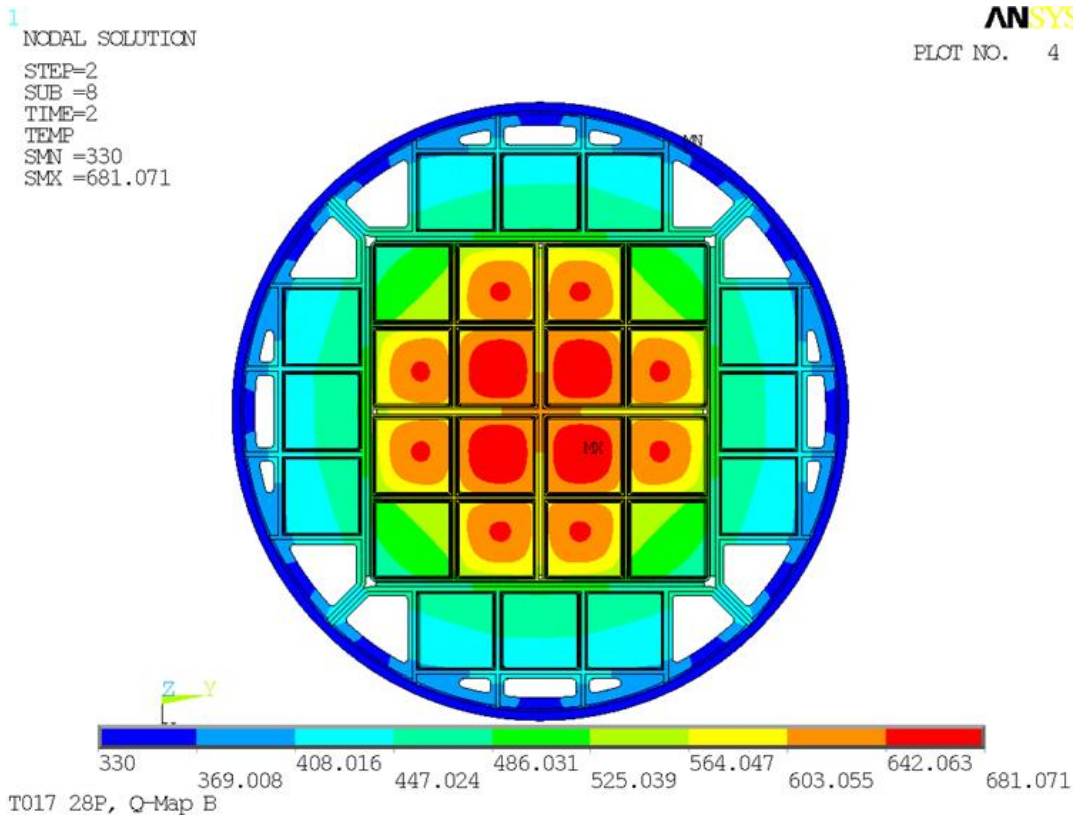

Figure 4-42. Basket and Assembly Material Temperature Distribution – 28P Basket – Concentrated Payload

<u>68B Basket</u>

The results of the uniform payload 68B basket thermal analysis are presented in Table 4-23 and illustrated in Figure 4-43. The peak assembly cladding temperature is 608°F, which is well under the 752°F clad temperature limit. The peak basket material temperature is 588°F, which is well under the allowable value of 700°F. Thus, the results show that the 68B basket can accommodate a uniform payload of BWR assemblies that has an overall heat generation level of 24 kW (i.e., a payload with 0.353 kW in each basket cell), and meet the thermal requirements by a wide margin.

The results of the concentrated payload heat generation case 68B basket thermal analysis are presented in Table 4-23 and illustrated in Figure 4-44. The peak assembly cladding temperature is 665°F, which is under the 752°F clad temperature limit by a significant margin. The peak basket material temperature is 634°F, which is under the 700°F temperature limit by a significant margin. Thus, the results show that the 68B basket can accommodate even a concentrated payload of 1.0 kW BWR assemblies in the center 24 cells of the basket and meet the thermal requirements by a significant margin. (Since the fuel specifications limit the BWR assembly heat generation to 0.85 kW, which would require the payload's 24 kW heat generation to be spread out over a larger number of basket cells, the actual peak temperatures will be even lower.) Thus, up to 28 BWR assemblies with a burnup of 62.5 GWd/MTU and a cooling time of 5 years can be loaded into the 68B basket.

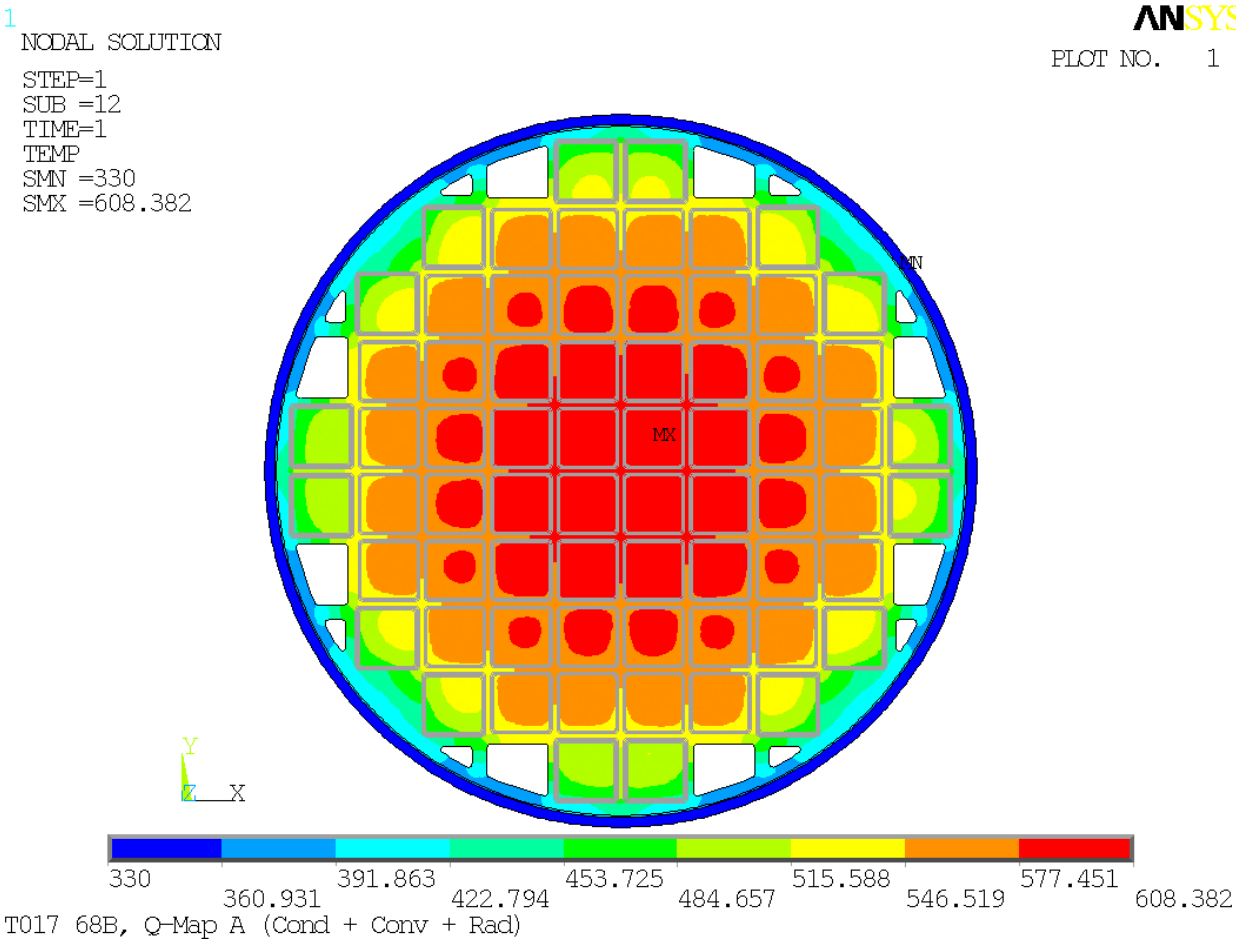

Figure 4-43. Basket and Assembly Material Temperature Distribution – 68B Basket – Uniform Payload

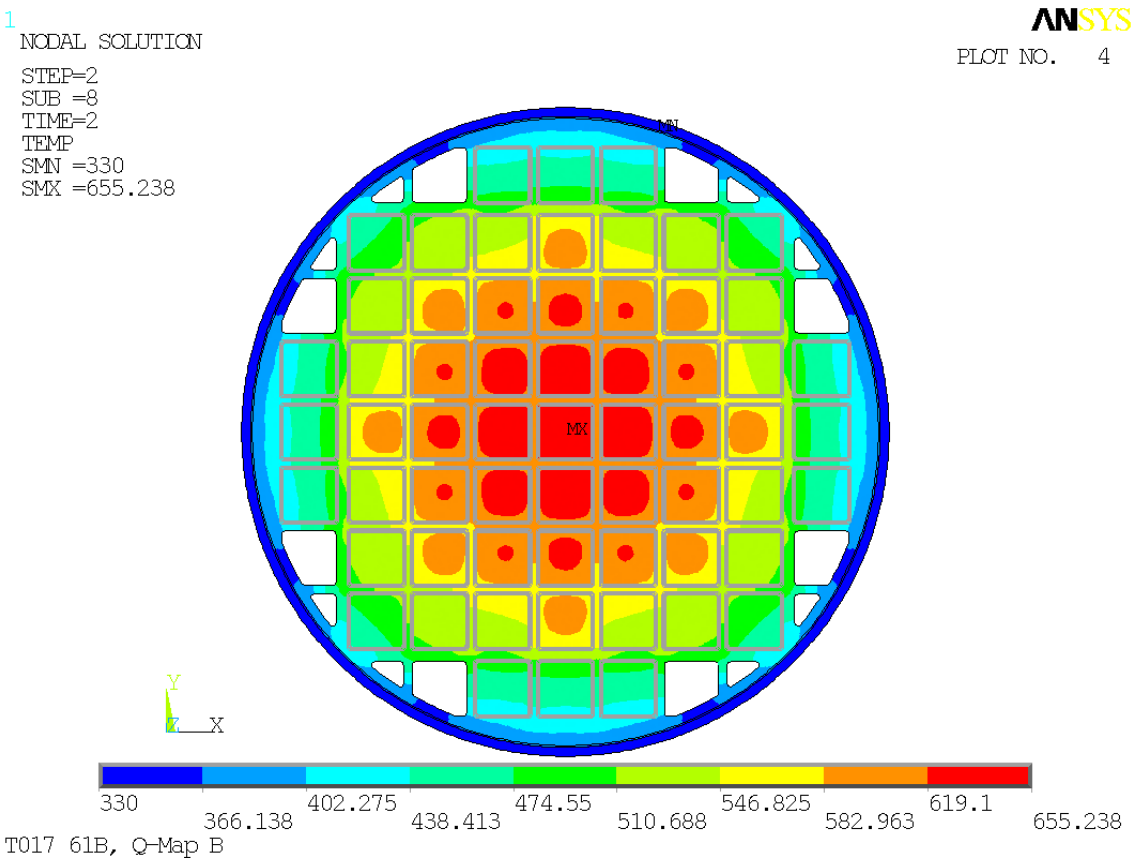

Figure 4-44. Basket Structure Material Temperature Distribution – 68B Basket – Concentrated Payload

<u>61B Basket</u>

The results of the uniform payload 61B basket thermal analysis are presented in Table 4-23 and illustrated in Figure 4-45. The peak assembly cladding temperature is 578°F, which is well under the 752°F clad temperature limit. The peak basket material temperature is 559°F, which is well under the allowable value of 700°F. Thus, the results show that the 61B basket can accommodate a uniform payload of BWR assemblies with 0.353 kW in each basket cell, and meet the thermal requirements by a wide margin.

The results of the concentrated payload heat generation case 61B basket thermal analysis are presented in Table 4-23 and illustrated in Figure 4-46. The peak assembly cladding temperature is 655°F, which is under the 752°F clad temperature limit by a significant margin. The peak basket material temperature is 611°F, which is under the 700°F temperature limit by a significant margin. Thus, the results show that the 61B basket can accommodate even a concentrated payload of 0.83 kW BWR assemblies in the center 29 cells of the basket and meet the thermal requirements by a significant margin. A payload of 28 BWR assemblies that each have a heat generation level of 0.85 kW (i.e., the same overall heat generation level distributed over 28, vs. 29 cells) would not produce significantly higher peak temperatures. Thus, up to 28 BWR assemblies with a burnup of 62.5 GWd/MTU and a cooling time of 5 years can be loaded into the 61B basket.

Basket Thermal Analysis Conclusions

The results of the thermal evaluations show that the assembly peak cladding temperatures remain below the 400°C limit for all four basket designs. The basket structural steel remains under the ASME code limit of 700°F for all basket designs. The peak borated aluminum temperatures are under 650°F for all four basket designs. These temperatures are not considered a concern, as no structural credit is taken for the borated aluminum material.

The analyses show that for all four basket designs, the cladding and basket material temperature limits are not exceeded even if the maximum allowable overall heat generation level of 24 kW is concentrated within 12 PWR assemblies that have the maximum allowable individual assembly heat generation level of 2.0 kW, or 28 BWR assemblies that have the maximum allowable individual assembly heat generation level of 0.85 kW, where those assemblies are concentrated in the basket center cells (i.e., are placed in the worst possible basket locations). Thus, in summary, the analyses demonstrate that acceptable cladding and basket temperatures will occur for any assembly payload that meets the fuel specification requirements shown in Table 4-4. Specifically, any payload that has an overall heat generation level of 24 kW or less, and has no individual PWR or BWR assemblies with heat generation levels over 2.0 kW or 0.85 kW, respectively, will produce acceptable assembly cladding and basket component temperatures.

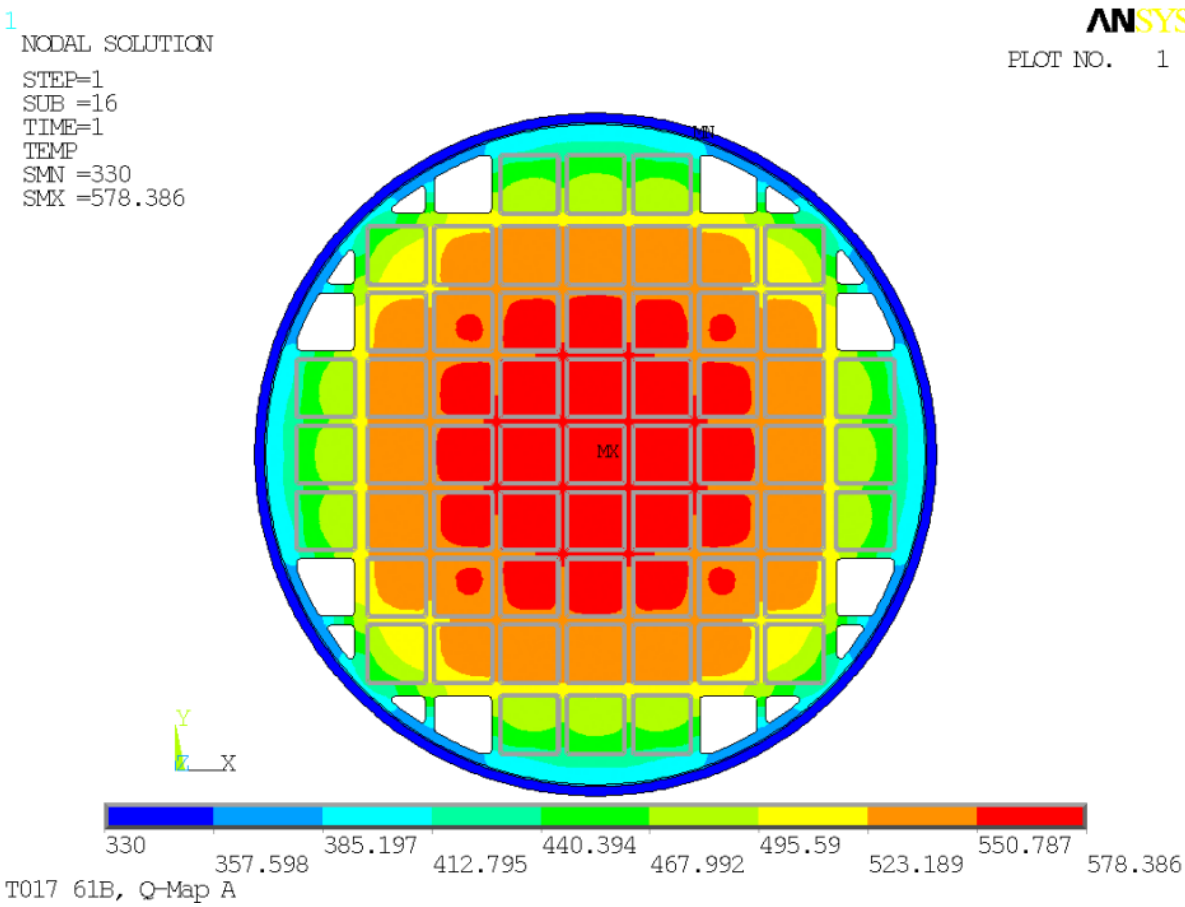

Figure 4-45. Basket and Assembly Material Temperature Distribution – 61B Basket-Uniform Payload

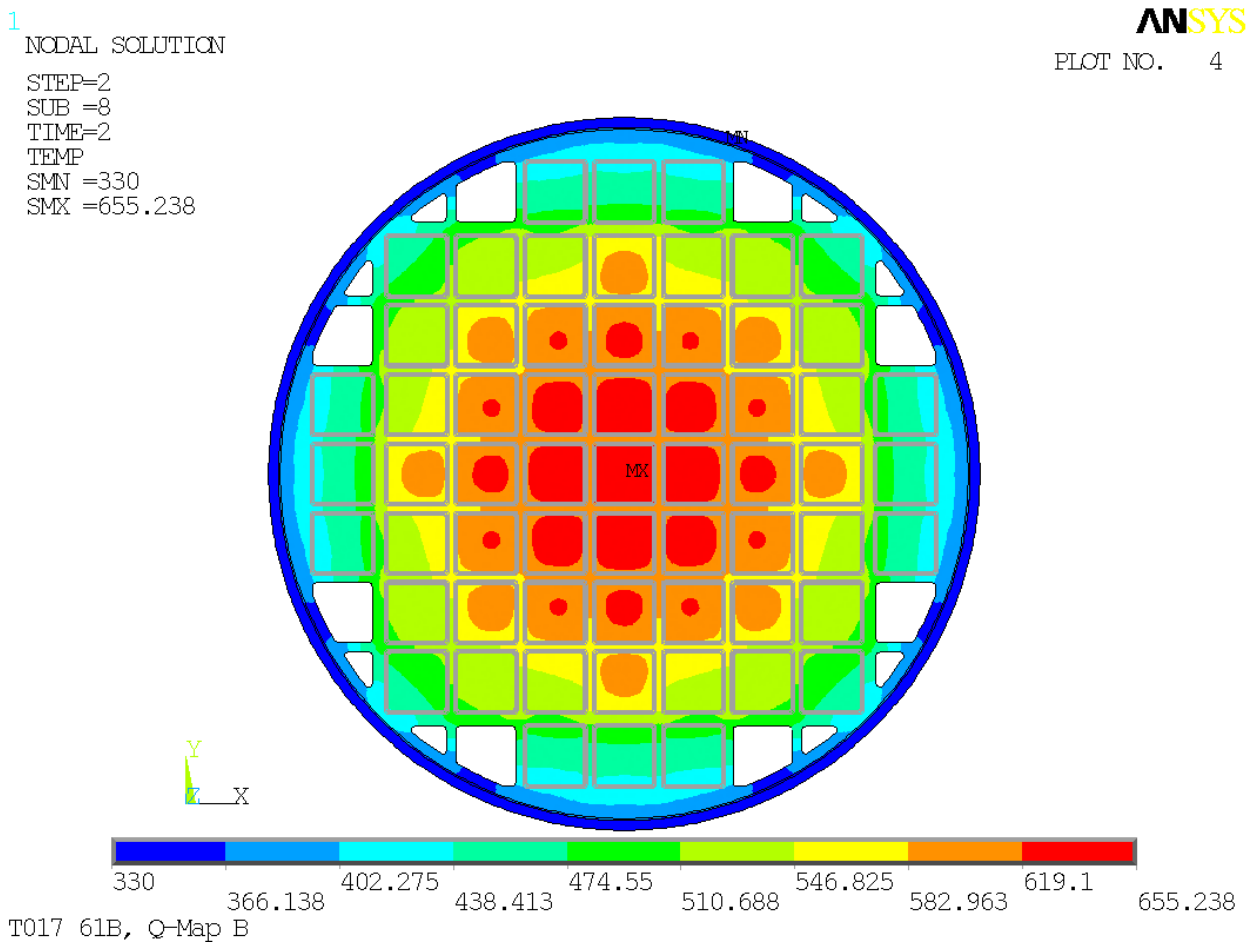

Figure 4-46. Basket and Assembly Material Temperature Distribution - 61B Basket – Concentrated Payload

4.3.3 **Shielding Analyses**

Shielding analyses have been performed on the cask and basket designs described in Sections 4.1.1 and 4.1.2, using the industry-standard MCNP5 Monte Carlo code. The objective of the shielding analyses is to demonstrate that any assembly payload with an overall heat generation level of 24 kW or less will produce cask exterior dose rates that meet all 10 CFR 71 regulatory limits. Those limits are 200 mrem/hr at any point on the accessible package surface and 10 mrem/hr at any point on a vertical plane two meters from the side of the package and/or conveyance (i.e., transport vehicle, such as a rail car).

4.3.3.1 Shielding Model Configuration

The shielding evaluation is performed using azimuthally-symmetric, R-Z models of the cask system. An illustration of a typical shielding model is shown in Figure 4-47.

The radial shielding thicknesses described in Section 4.1.1 are modeled (i.e., 3.625 inches of lead, 7.0 inches of neutron shield and 4.15 inches of overall stainless steel thickness). The cask end shielding and impact limiters are also described in Section 4.1.1. Thick (11 inch) steel is modeled at the ends of the cask configuration, which represents the 8.0-inch cask bottom plate/lid and additional 3.0 inches of steel shielding that is attached to the impact limiters. The impact limiter sides consist of 0.5 g/cc redwood that extends out to a diameter of 128 inches. The redwood portions of the impact limiters have an axial length of 18 inches and extend over 12 inches of the ends of the cask body. Polyurethane foam at a density of 0.2 g/cc is modeled for the impact limiter ends and corners (as shown in Figure 4-47). The thickness of the impact limiter end foam is 29.563 inches thick. As shown in Figure 4-47, the annular gaps in the impact limiter ends are modeled.

The basket and assembly materials within the cask interior are “smeared” into a homogenous, equal-area cylindrical mass. The cylindrical mass is divided into four axial sections, representing the assemblies’ fuel zone, gas plenum zone, and top and bottom nozzle zones. Each of the four axial zones has a different homogenous material composition. The modeled fuel zones (which contain the modeled gamma or neutron source) are 144 and 150 inches high, for PWR and BWR fuel, respectively.

The empty regions around the basket edge are modeled as an annular void. In the neutron shield region, neutron shield material and the copper fins are “smeared” into a homogenous mixture that fills the annular neutron shield region. The neutron shield region extends over the entire axial span between the bottom and top impact limiters.

A large volume of air is modeled around the cask to address air scattering effects. Within that air mass, a cylindrical surface is defined two meters off the side surface of the (128 inch diameter) impact limiters (i.e., a cylinder with a radius of 362.56 cm). This conservatively represents the vertical surface (2 meters from the “conveyance”) where the 10 mrem/hr dose rate limit applies. Dose rates calculated on the cylindrical surface would correspond to the dose rates on the vertical surface at the elevation where peak dose rates would occur (directly across from the cask centerline).

Dose rates are tallied on that cylindrical surface, as well as the 128 inch diameter surface that corresponds to the radial surfaces of the impact limiters and personnel barrier (i.e., the radial surfaces of the “package”, as defined by regulation). Dose rates are also calculated on the package ends (i.e., the top and bottom end surfaces of the impact limiters). Finally, dose rates are tallied on the radial surface of the cask body, between the impact limiters. The radial surfaces are subdivided into a large number of axial tally segments, to determine the axial dose rate profile on those surfaces, and to determine the peak dose rates that occur on those surfaces. Similarly, the axial (end) surfaces are subdivided into several radial segments.

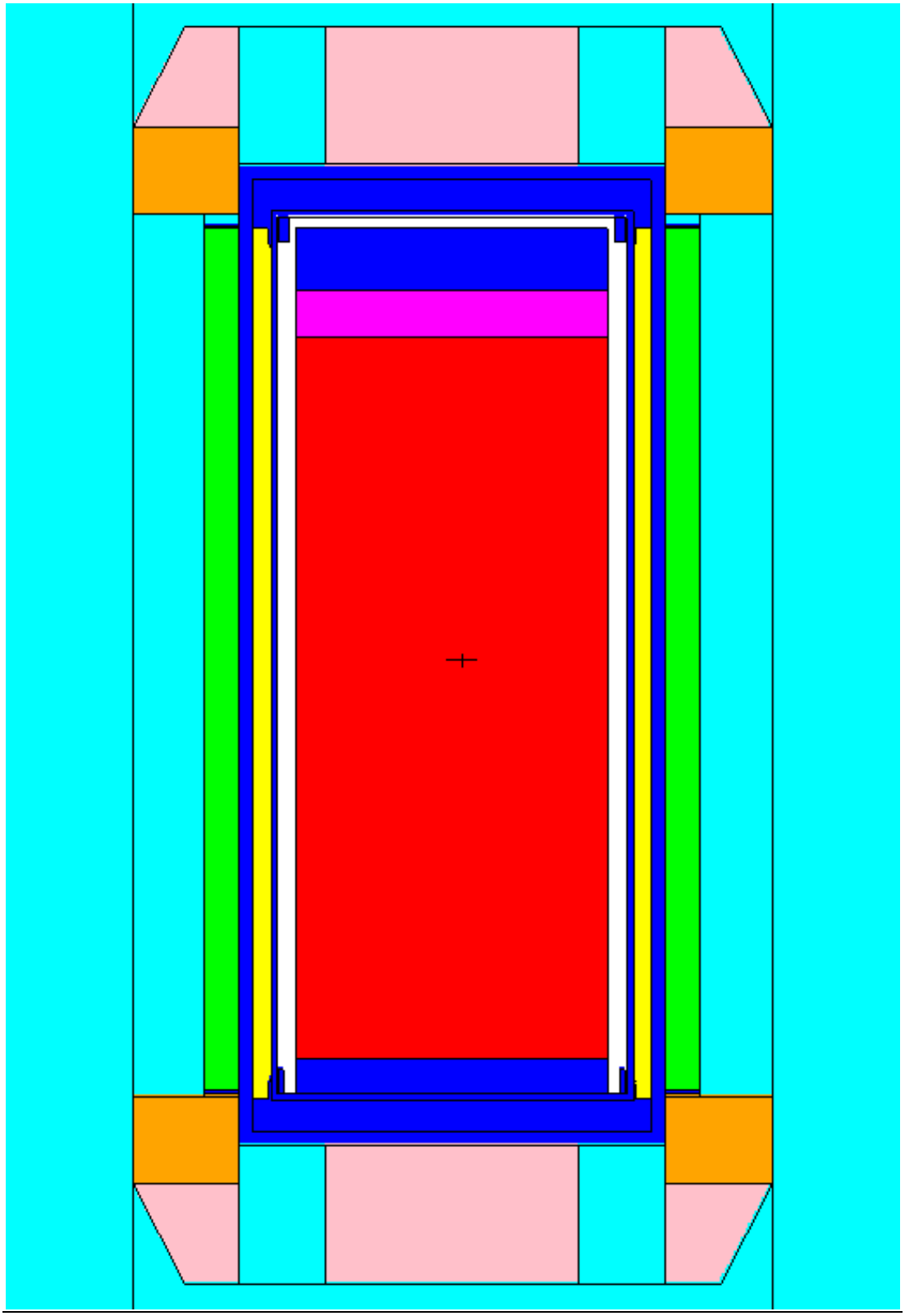

Figure 4-47. R-Z Shielding Model Illustration

4.3.3.2 Source Strength Determination

ORIGEN2 fuel depletion code results are used to determine assembly gamma and neutron source strengths, and heat generation levels, as a function of assembly burnup (GWd/MTU) initial enrichment (w/o U-235) and post-irradiation cooling time (years).

Determination of Evaluated Fuel Parameters

For the shielding evaluations, PWR and BWR assembly burnup levels ranging from 30 GWd/MTU to 62.5 GWd/MTU are evaluated. Scoping evaluations show that lower initial enrichment levels produce higher cask exterior dose rates, for a given assembly heat generation level (in large part due to higher neutron source strengths). Thus, the evaluations model lower-bound initial enrichment levels for each evaluated burnup level. The initial enrichment levels modeled for each burnup level are shown in Table 4-24 through Table 4-39. The US spent fuel demographic data shown in Figure 4-50 shows that the modeled initial enrichment levels are conservative (low) initial enrichment values for each assembly burnup level.

Once the assembly burnup and initial enrichment level are determined (for each evaluated case), the cooling time that yields the maximum allowable per assembly heat generation level (i.e., 1.8 kW/MTU and 2.0 kW/MTU for PWR and BWR fuel, respectively) is determined. (The bases of these maximum allowable per-MTU heat generation levels are discussed below). These minimum allowable cooling times are shown for each burnup level in Table 4-24 through Table 4-39.

ORIGEN2 results give fuel heat generation levels, in units of watts per MTU, as a function of assembly burnup, initial enrichment and cooling time. These must be multiplied by the modeled assembly uranium loading (in MTU) to yield the assembly heat generation levels in watts.

For a given allowable per-assembly heat generation level, a lower assembly uranium loading yields a higher allowable fuel heat generation level (in watts/MTU), which in turn results in a lower required cooling time. It is known from extensive shielding evaluation experience that cask exterior gamma dose rates do not vary significantly with assembly uranium loading (where the per-MTU source strengths remain constant). The total fuel gamma sources increase directly with assembly uranium loading, but increased self shielding almost entirely offsets the effect of the increased source. Even for neutrons, scoping analyses show that cask exterior dose rates do not vary significantly with assembly uranium loading, for a given neutron source strength per MTU (with neutron dose rates varying by only approximately 2% between minimum and maximum PWR assembly uranium loadings). Therefore, for a given assembly heat generation level, in watts/assembly, a lower assembly uranium loading (MTU) will yield higher cask exterior dose rates.

The shielding evaluations conservatively model (low) uranium loadings of 0.4167 MTU and 0.1755 MTU for PWR and BWR assemblies, respectively. These are the lowest uranium loadings shown for PWR and BWR assembly types in Tables 6.1.2-1 and 6.1.2-2 of the

MAGNATRAN transportation cask Safety Analysis Report (SAR)[9]. For uniform assembly payloads, and given the cask capacities of 32 PWR assemblies or 68 BWR assemblies, the cask's overall heat generation limit of 24 kW corresponds to per-assembly heat generation levels of 750 and 353 watts, for PWR and BWR fuel, respectively. This in turn corresponds to per-MTU fuel heat generation levels of 1.8 kW/MTU and 2.0 kW/MTU, for PWR and BWR fuel respectively, at the (lower bound) PWR and BWR assembly uranium loadings given above. The evaluated cooling times shown in Table 4-24 through Table 4-39 correspond to those per-MTU heat generation levels.

Modeled Sources

Once the burnup, initial enrichment and cooling time values for each evaluated case (shown in Table 4-24 through Table 4-39) are determined, the corresponding assembly fuel zone gamma and neutron source strengths are determined using ORIGEN2. ORIGEN2 directly outputs energy-dependent gamma source strengths. A Cm-244 spontaneous fission energy spectrum is modeled for the neutron source. The ORIGEN2 gamma and neutron source strengths, which are output on a per-MTU of fuel basis, are multiplied by the assembly uranium loadings shown above, and the cask payload capacities (of 32 PWR and 68 BWR) to yield the modeled (per-cask) gamma and neutron source strengths.

The shielding analyses model the effects of the axial burnup profiles present in the assemblies by directly modeling axially-varying assembly fuel zone gamma and neutron source strengths (i.e., by modeling gamma and neutron source strength profiles. These analyses model a PWR axial burnup profile that is bounding for burnup levels over 35 GWd/MTU. A representative profile is also modeled for BWR fuel

Gamma source strengths from activated assembly metal hardware in fuel, gas plenum bottom nozzle and top nozzle axial zones of the PWR and BWR fuel assemblies are calculated and modeled in the shielding analyses. In each axial zone, the assembly hardware gamma source strength is calculated based on an assumed initial cobalt quantity (present in the assembly before irradiation), and on the level of cobalt activation (i.e., curies of Co-60 per initial gram of cobalt present), which is calculated as a function of assembly burnup, initial enrichment and cooling time.

Cobalt activation levels for the assembly core zone, at the time of assembly discharge, have been calculated in previous licensing evaluations. PWR core Co-60 activation levels are presented as a function of assembly burnup in Table 5.2-6 of the FuelSolutions™ W21 Canister Transportation SAR[10]. Table 5.2-3 of the FuelSolutions™ W74 Canister Transportation SAR[11]

---

[9] MAGNATRAN Transport Cask SAR, Revision 12A, October 2012, NRC Docket No. 71-9356, NAC International.

[10] FuelSolutions™ W21 Canister Transportation Cask Safety Analysis Report, Revision 3, April 2002, NRC Docket No. 71-9276, BNFL Fuel Solutions Corporation.

[11] FuelSolutions™ W74 Canister Transportation Cask Safety Analysis Report, Revision 3, April 2002, NRC Docket No. 71-9276, BNFL Fuel Solutions Corporation.

shows the BWR assembly core zone for a single burnup level. Comparison of the PWR and BWR values, at similar burnup levels, shows that BWR activation levels are not higher than PWR activation levels. Thus, the burnup-dependent core zone Co-60 activation levels shown in Table 5.2-6 of the W21 canister SAR are applied for BWR fuel as well. Once the initial assembly fuel zone Co-60 activation level, at discharge, is known as a function of assembly burnup (and lower-bound initial enrichment level), the core zone hardware activation level (curies of Co-60 per initial gram of cobalt) can be determined for the assembly burnup and cooling time combinations shown in Table 4-24 through Table 4-39.

Due to reduced neutron fluences and softer neutron energy spectra, the Co-60 activation levels in the plenum and nozzle regions of the assembly are lower than those that apply in the assembly core (fuel) zone. Activation scaling factors for each PWR and BWR assembly non-fuel axial zone have been determined in previous licensing evaluations, and are presented in the FuelSolutions™ W21 and W74 canister SARs. For the gas plenum region, the scaling factor is 0.2 for both PWR and BWR fuel. For the bottom nozzle zone, the scaling factors are 0.2 and 0.15 for PWR and BWR fuel, respectively. For the top nozzle zone, the scaling factor for BWR fuel is 0.1. For PWR fuel, a scaling factor of 0.1 applies for most assembly top nozzles, but a factor of 0.05 applies for the CE 16 ×16 assembly top nozzles. This analysis models the CE 16x16 top nozzle, since it has the highest initial cobalt content and is the assembly top nozzle that will be closest to the top of the cask cavity (and the top of the lead shield), and thus will yield the highest dose rates around the cask top end.

After the Co-60 activation levels (in curies of Co-60 per initial gram of cobalt) are determined for each of the four PWR and BWR assembly axial zones, the Co-60 activity levels, in curies, are determined by multiplying those activation levels by upper-bound assembly zone cobalt quantities. Assembly axial zone cobalt masses are calculated based on assembly-type-specific stainless steel, inconel and Zircaloy masses given in DOE (OCRWM) references[12]. Cobalt concentrations of 10 ppm and 800 ppm are assumed for Zircaloy and stainless steel, respectively. A cobalt concentration of 4800 ppm is assumed for Inconel-718, whereas a concentration of 6500 ppm is conservatively assumed for all other types of inconel.

Cobalt masses of 11 grams and 1.5 grams are assumed for PWR and BWR fuel, respectively. These are upper bound values for modern Light Water Reactor (LWR) assemblies (that do not employ large amounts of stainless steel hardware in the assembly core zone). Any (very old) assemblies with higher core zone cobalt quantities will have lower source terms despite the higher cobalt quantities, as they will all have very long cooling times at the time of shipment. For each of the non-fuel axial assembly zones, the highest initial cobalt quantity that occurs for any assembly type is conservatively modeled. Thus, hardware zone cobalt quantities from different (bounding) assembly types are conservatively assumed to simultaneously exist. For PWR fuel, the bottom nozzle, plenum and top nozzle zones are assumed to have initial cobalt quantities of 12.76 grams, 7.71 grams, and 39.09 grams, respectively. For BWR fuel, the bottom and top nozzle zones are assumed to have initial cobalt quantities of 3.63 grams and 3.5 grams,

[12] DOE/RW-0184, "Characteristics of Spent Fuel, High-Level Waste, and Other Radioactive Wastes Which May Require Long-Term Isolation", Appendix 2A, Volume 3 of 6, U.S. Department of Energy, Office of Civilian Nuclear Waste Management, December 1987.

respectively. BWR assembly gas plenum zones do not have significant quantities of cobalt-bearing metal.

The available ORIGEN2 reference data, as well as the Co-60 activation level data presented in the FuelSolutions™ canister SARs, covers a burnup range up to 60 GWd/MTU. For the (energy-dependent) gamma source strengths, 62.5 GWd/MTU values are determined through extrapolation of the source term data, and its associated burnup dependence. The neutron source strength is scaled up based on a 4th power dependence of neutron source strength on burnup (which is observed in the existing data). Given the small degree of extrapolation (from 60 to 62.5 GWd/MTU), these extrapolations should not be a source of significant error.

4.3.3.3 Adjustments to Calculated Neutron Dose Rates

Three adjustments are made to the raw, calculated neutron dose rates, which account for sub-critical neutron multiplication within the assemblies, axial burnup profile effects, and neutron streaming through the heat transfer fins present within the cask neutron shield.

<u>Sub-Critical Neutron Multiplication</u>

Even in the absence of water within the cask cavity, primary neutron sources can cause fissions within the fuel material, resulting in an increase to the overall neutron source. To estimate the magnitude of this effect, the 32P and 68B criticality models (described in Section 4.3.4) are run with the cask interior water density set to zero.

The primary neutron source strengths calculated by ORIGEN2 are based upon burned fuel material isotopic compositions that are also determined by the code. In the dry criticality models, the modeled fuel isotopic composition is the same isotopic composition (output by ORIGEN2) that the primary neutron source strengths are based upon.

The dry criticality analyses show maximum k_{eff} values of approximately 0.26 and approximately 0.21 for the 32P and 68B baskets, respectively. The relative increase in neutron source strength, due to sub-critical neutron multiplication, is determined by the equation: $1 / (1-k_{eff})$. Thus, the above dry k_{eff} values correspond to sub-critical multiplication source increase factors of 1.35 and 1.27, for PWR and BWR fuel, respectively.

<u>Axial Profile Effects</u>

Whereas gamma source strengths scale roughly linearly with fuel burnup level, for a given initial enrichment and cooling time, neutron source strengths scale with burnup in a strong, non-linear fashion. Per-MTU neutron source strengths scale roughly as the burnup to the 4th power. Thus, an axial variation (or profile) in assembly burnup not only changes the axial distribution of the neutron source, but it also increases the overall neutron source for a given assembly-average burnup level (due to the non-linear dependence on burnup). In other words, assembly average burnup does not correspond to assembly-average neutron source strength. Since the assembly neutron source strengths are determined using ORIGEN2 on the basis of the assembly-average burnup level, the overall neutron source strength must be adjusted upward to account for this effect.

The axial burnup profile modeled for this shielding evaluation, which is bounding for PWR fuel with burnup levels over 35 GWd/MTU, was also modeled in previous cask licensing evaluations. Thus, the neutron source strength increase factor determined for that profile in those licensing evaluations can be used for these evaluations as well. Based on those previous licensing evaluations, "profile effect" increase factors of 15% and 41% are applied for the PWR and BWR fuel analyses, respectively.

Neutron Streaming Though Neutron Shield Heat Transfer Fins

Copper plates extend through the radial neutron shielding material from the cask outer shell to the outer radial steel skin (that encases the neutron shield). These plates, or fins, are necessary to transfer heat through the neutron shield material to the ambient environment. The fins are placed at angles relative to the cask surface (as opposed to extending out directly in the radial direction) so that neutrons do not have a direct streaming path. Due to the fact that the neutrons are not all moving in a purely radial direction there is still some streaming effect, however.

Many existing cask system licensing evaluations did not directly (rigorously) model the heat transfer fin configuration within the cask neutron shield region. Instead, the primary shielding analyses "smeared" the fins into the neutron shield material, and modeled the resulting homogenous material throughout the annular neutron shield region (as was done for these shielding evaluations). For this report, a supplementary streaming analyses was performed to estimate the increase in cask exterior radial neutron dose rates that will occur due to the heat transfer fin streaming effect.

Table 5.4-1 of the TS125 Transportation Cask SAR[13] presents the results of a neutron shield heat transfer fin neutron streaming evaluation that was performed for the TS-125 cask (whose metal heat transfer fin configuration is similar to that of the cask described in Section 4.1 of this report). The evaluation showed a 4% increase in neutron dose rates on the plane two meters from the package side. Larger increases were shown for closer-in surfaces, such as the package (personnel barrier) surface and the cask body surface. However, even with the larger streaming effect, the peak dose rates on those surfaces remain below their regulatory limits by far larger margins than the peak dose rate on the plane two meters from the package surface.

Based on these existing licensing evaluations that have been performed for similar cask systems, the neutron dose rates calculated in this shielding evaluation are adjusted upward by 4% to account for any neutron streaming that may occur through the copper heat transfer fins that extend through the cask radial neutron shield.

4.3.3.4 Shielding Evaluation Results (NCT)

The results of the shielding analyses, for uniform assembly payloads, are presented in Table 4-24 through Table 4-39.

[13] FuelSolutions™ TS125 Transportation Cask Safety Analysis Report, Revision 3, April 2002, NRC Docket No. 71-9276, BNFL Fuel Solutions Corporation.

For each evaluated case, the applicable assembly burnup, initial enrichment and cooling time are presented in the table title. The peak dose rates that occur on each of the surfaces where regulatory dose rate limits apply are then presented. These include the vertical surface two meters from the package side, the radial package surface, the top package surface, the bottom package surface, and the cask body radial surface (between the impact limiters and under the personnel barrier). For each surface, the applicable regulatory dose rate limit is also listed. For each peak total dose rate, the contributions from the fuel gamma source, the fuel neutron source, from activated assembly metal hardware sources, and from secondary gamma sources (produced from neutron absorption in hydrogen-bearing materials) are also presented. The presented neutron and gamma dose rate contributions are those that apply at the location of peak total dose rate. Their relative contributions may vary significantly over the surface.

As discussed in Section 4.3.3.2, the initial enrichment and cooling time selected for each evaluated burnup level yield the maximum allowable per MTU heat generation level (i.e., 1.8 kW/MTU for PWR and 2.0 kW/MTU for BWR) that could occur for a uniform assembly payload that has an overall heat generation level of 24 kW or less (for cask capacities of 32 PWR assemblies or 68 BWR assemblies). Thus, the set of evaluated cases is a bounding set of cases that yields maximum possible cask exterior dose rates for any given burnup level, for any uniform payload that meets the overall heat generation limit of 24 kW.

The peak NCT dose rates on the vertical plane 2 meters from the package side occur near the axial center of the cask for all cases (i.e., all burnup levels and for PWR and BWR fuel). In most cases, this is the controlling location, where dose rates are closest to their regulatory limits.

On the package radial surface, the NCT peak dose rates occur over the assembly top nozzle zone, as opposed to near the axial center of the cask, for most cases, the exception being BWR fuel with burnup levels of 45 GWd/MTU or more. As the tables show, the dose rate contributions from the assembly top nozzles (hardware) are significant for most cases. Due to their strong, penetrating Co-60 gamma source, and relative lack of self-shielding, the assembly top nozzles yield the maximum gamma dose rates on the package radial surface. On the 2-meter plane, this localized effect washes out, and the peak dose location moves to a point over the cask's axial center.

On the package (i.e., impact limiter) end surfaces, the peak NCT gamma dose rates occur on the cask centerline, while the peak NCT neutron dose rates occur over the annular gap in the impact limiter end foam. This is due to the fact that the foam, which is hydrogen-bearing but has a very low density, provides some amount of neutron shielding but does not significantly attenuate gammas. Thus, the loss of foam in the annular gap region causes neutron dose rates to rise significantly, but not gamma dose rates. In all cases, two local peaks in total dose rate occur on the package end surfaces, one over the cask centerline and one over the annular gap. For all cases except for the 30 and 35 GWd/MTU PWR cases, the peak that occurs over the annular gap is higher, and sets the peak dose rate presented in Table 4-24 through Table 4-39.

On the cask body radial surface (underneath the personnel barrier, between the impact limiters), the peak NCT dose rate generally occurs at the location of the gap between the top of the neutron shield and the bottom of the top impact limiter, directly across from the assembly top nozzles. The only exception to this is BWR fuel with a burnup level of 55 GWd/MTU or more, where a dominant neutron dose rate contribution moves the peak to near the axial center of the cask. As

shown in the tables, the top nozzle (assembly hardware) gamma dose rate contribution is the majority of the overall dose rate in most cases.

The dose rate results, presented in Table 4-24 through Table 4-39, show dose rates under the regulatory limit at all locations for all analyzed cases. Therefore, it is concluded that any uniform assembly payload that has an overall heat generation level under 24 kW will meet the 10 CFR 71 requirements with respect to shielding.

This conclusion is demonstrated directly by the shielding analyses for the 32P and 68B baskets. The presented dose rate results should be bounding for the 28P and 61B baskets, as those baskets have fewer assemblies (i.e., less MTU), with the same limits on kW/MTU applied. Thus, the overall source strengths will be lower. It is also true that the damaged fuel cans, present in every basket cell in the 28P and 61B baskets, will provide additional shielding. The 28P basket has additional structures, such as the large bridge plates around the center 16 assemblies, that provide additional shielding.

It should be noted that the dose rate results, presented in Table 4-24 through Table 4-39, are based on a shielding configuration that does not exactly match the one described in Section 4.1. As discussed in Section 4.3.3.6, additional localized shielding has to be added to the Section 4.1 cask configuration in order to reduce gamma streaming around the bottom and top ends of the radial gamma shield and produce cask exterior dose rates within the regulatory limits. The dose rate results shown in Table 4-24 through Table 4-39 are based upon the presence of some added local shielding, which is described in Section 4.3.3.6.

4.3.3.5 Hypothetical Accident Condition Shielding Evaluation

Table 4-24 through Table 4-39 also present dose rates for the HAC cask configuration. The peak dose rates that occur on the planes one meter from the cask body radial, top and bottom surfaces are presented. The results show that the dose rates are under the 1000 mrem/hr limit, at all locations and for all evaluated cases, by a significant margin.

The cask configuration changes (for HAC vs. NCT) are consistent with those modeled in previous licensing evaluations.[9] Axial gaps (0.87 inches high) on the top and bottom ends of the radial lead shield are modeled to account for potential effects of axial lead slump that may occur as a result of a cask end drop. The radial thickness of the lead is reduced by 0.5 inches, over the entire axial length of the shield, to account for potential effects of horizontal lead slump that may occur after a cask side drop. All moisture (i.e., all hydrogen and oxygen) is removed from the radial neutron shield material, to account for (complete) water vapor off-gassing that may occur during the fire event. The impact limiter wood and foam materials are completely removed (i.e., conservatively neglected) in the HAC shielding model.

With the exception of the 30 and 35 GWd/MTU PWR fuel cases, the peak one meter plane dose rate occurs on the radial surface, near the axial center of the cask, over the peak burnup section of the fuel. This is expected, since the neutron dose rate is the dominant contributor. This is due to the fact that, due to the complete loss of hydrogen in the neutron shield, the radial neutron dose rates increase much more than the radial gamma dose rates or the axial gamma or neutron dose rates. In the case of low burnup PWR fuel, the peak occurs over the bottom nozzle region of the assemblies. Secondary gamma dose rate contributions are not presented in the results

tables. As there are no hydrogen-bearing materials in the HAC cask configuration, secondary gamma production will be insignificant.

Table 4-24. Peak Cask Exterior Surface Dose Rates for 30 GWd/MTU, 2.5% Initial Enrichment, 5 Year Cooled PWR Fuel (uniform, 32-assembly, 1.8 kW/MTU payload) (mrem/hr)

	Primary Fuel Gamma*	Assembly Hardware Gamma*	Neutron*	Secondary Gamma*	Total	10CFR71 Limit
NCT 2-meter Vertical Side Plane	4.94	2.90	0.76	0.26	8.86	10
NCT Package Radial Surface	3.98	22.26	1.00	0.35	27.58	200
NCT Package Bottom Surface	12.43	105.99	6.31	0.34	125.07	200
NCT Package Top Surface	3.72	58.25	3.10	0.20	65.27	200
NCT Cask Body Radial Surface	1.48	96.47	6.62	0.50	105.08	1000
HAC 1-meter Radial Surface	2.99	164.00	30.14	-	197.14	1000
HAC 1-meter Bottom Surface	18.48	157.53	54.14	-	230.15	1000
HAC 1-meter Top Surface	5.08	77.08	26.80	-	108.96	1000

*Presented values are those that occur at the location of peak total dose rate on the surface in question.

Table 4-25. Peak Cask Exterior Surface Dose Rates for 35 GWd/MTU, 2.75% Initial Enrichment, 6 Year Cooled PWR Fuel (uniform, 32-assembly, 1.8 kW/MTU payload) (mrem/hr)

	Primary Fuel Gamma*	Assembly Hardware Gamma*	Neutron*	Secondary Gamma*	Total	10CFR71 Limit
NCT 2-meter Vertical Side Plane	3.71	2.92	1.19	0.41	8.22	10
NCT Package Radial Surface	1.22	35.94	6.71	0.36	44.22	200
NCT Package Bottom Surface	6.90	80.97	42.42	0.37	130.67	200
NCT Package Top Surface	2.14	45.33	21.85	0.19	69.51	200
NCT Cask Body Radial Surface	1.09	97.10	10.38	0.79	109.36	1000
HAC 1-meter Radial Surface	2.11	165.00	47.24	-	214.35	1000
HAC 1-meter Bottom Surface	13.36	158.56	84.85	-	256.76	1000
HAC 1-meter Top Surface	3.52	77.58	42.00	-	123.11	1000

*Presented values are those that occur at the location of peak total dose rate on the surface in question.

Table 4-26. Peak Cask Exterior Surface Dose Rates for 40 GWd/MTU, 3.0% Initial Enrichment, 7 Year Cooled PWR Fuel (uniform, 32-assembly, 1.8 kW/MTU payload) (mrem/hr)

	Primary Fuel Gamma*	Assembly Hardware Gamma*	Neutron*	Secondary Gamma*	Total	10CFR71 Limit
NCT 2-meter Vertical Side Plane	3.26	2.66	1.64	0.56	8.12	10
NCT Package Radial Surface	1.06	32.79	9.25	0.50	43.60	200
NCT Package Bottom Surface	5.83	73.89	58.47	0.52	138.71	200
NCT Package Top Surface	1.75	41.36	30.12	0.27	73.50	200
NCT Cask Body Radial Surface	0.93	88.61	14.30	1.09	104.94	1000
HAC 1-meter Radial Surface	24.42	12.70	232.61	-	269.73	1000
HAC 1-meter Bottom Surface	11.22	144.69	116.95	-	272.86	1000
HAC 1-meter Top Surface	2.75	69.31	60.27	-	132.34	1000

*Presented values are those that occur at the location of peak total dose rate on the surface in question.

Table 4-27. Peak Cask Exterior Surface Dose Rates for 45 GWd/MTU, 3.25% Initial Enrichment, 10-year Cooled PWR Fuel (uniform, 32-assembly, 1.8 kW/MTU payload) (mrem/hr)

	Primary Fuel Gamma*	Assembly Hardware Gamma*	Neutron*	Secondary Gamma*	Total	10CFR71 Limit
NCT 2-meter Vertical Side Plane	2.31	1.91	2.31	0.80	7.33	10
NCT Package Radial Surface	0.72	23.53	13.05	0.70	37.99	200
NCT Package Bottom Surface	3.76	53.02	82.44	0.73	139.94	200
NCT Package Top Surface	1.01	26.76	45.51	0.38	73.65	200
NCT Cask Body Radial Surface	0.63	63.58	20.16	1.54	85.91	1000
HAC 1-meter Radial Surface	17.41	9.11	327.93	-	354.46	1000
HAC 1-meter Bottom Surface	7.20	103.82	164.88	-	275.90	1000
HAC 1-meter Top Surface	1.74	49.73	84.97	-	136.44	1000

*Presented values are those that occur at the location of peak total dose rate on the surface in question.

Table 4-28. Peak Cask Exterior Surface Dose Rates for 50 GWd/MTU, 3.5% Initial Enrichment, 13 Year Cooled PWR Fuel (uniform, 32-assembly, 1.8 kW/MTU payload) (mrem/hr)

	Primary Fuel Gamma*	Assembly Hardware Gamma*	Neutron*	Secondary Gamma*	Total	10CFR71 Limit
NCT 2-meter Vertical Side Plane	1.95	1.31	2.68	0.92	6.86	10
NCT Package Radial Surface	0.59	16.31	15.11	0.81	32.82	200
NCT Package Bottom Surface	2.71	32.33	101.48	0.85	137.38	200
NCT Package Top Surface	0.81	18.54	52.71	0.44	72.50	200
NCT Cask Body Radial Surface	0.51	44.07	23.35	1.78	69.71	1000
HAC 1-meter Radial Surface	14.59	6.32	379.83	-	400.73	1000
HAC 1-meter Bottom Surface	5.75	71.96	190.97	-	268.68	1000
HAC 1-meter Top Surface	1.40	34.47	98.41	-	134.28	1000

*Presented values are those that occur at the location of peak total dose rate on the surface in question.

Table 4-29. Peak Cask Exterior Surface Dose Rates for 55 GWd/MTU, 3.75% Initial Enrichment, 18 Year Cooled PWR Fuel (uniform, 32-assembly, 1.8 kW/MTU payload) (mrem/hr)

	Primary Fuel Gamma*	Assembly Hardware Gamma*	Neutron*	Secondary Gamma*	Total	10CFR71 Limit
NCT 2-meter Vertical Side Plane	1.42	0.72	2.86	0.99	5.99	10
NCT Package Radial Surface	0.43	8.94	16.13	0.86	26.35	200
NCT Package Bottom Surface	1.95	17.72	108.30	0.91	128.88	200
NCT Package Top Surface	0.58	10.16	56.25	0.47	67.46	200
NCT Cask Body Radial Surface	0.37	24.15	24.92	1.90	51.35	1000
HAC 1-meter Radial Surface	10.68	3.46	405.35	-	419.49	1000
HAC 1-meter Bottom Surface	4.14	39.43	203.80	-	247.37	1000
HAC 1-meter Top Surface	1.01	18.89	105.03	-	124.93	1000

*Presented values are those that occur at the location of peak total dose rate on the surface in question.

Table 4-30. Peak Cask Exterior Surface Dose Rates for 60 GWd/MTU, 4.0% Initial Enrichment, 23 Year Cooled PWR Fuel (uniform, 32-assembly, 1.8 kW/MTU payload) (mrem/hr)

	Primary Fuel Gamma*	Assembly Hardware Gamma*	Neutron*	Secondary Gamma*	Total	10CFR71 Limit
NCT 2-meter Vertical Side Plane	1.08	0.39	2.91	1.00	5.38	10
NCT Package Radial Surface	0.33	4.88	16.38	0.88	22.47	200
NCT Package Bottom Surface	1.50	9.68	110.01	0.93	122.13	200
NCT Package Top Surface	0.45	5.55	57.14	0.47	63.62	200
NCT Cask Body Radial Surface	0.29	13.20	25.32	1.93	40.73	1000
HAC 1-meter Radial Surface	8.07	1.89	411.77	-	421.73	1000
HAC 1-meter Bottom Surface	3.18	21.55	207.03	-	231.76	1000
HAC 1-meter Top Surface	0.77	10.32	106.69	-	117.79	1000

*Presented values are those that occur at the location of peak total dose rate on the surface in question.

Table 4-31. Peak Cask Exterior Surface Dose Rates for 62.5 GWd/MTU, 4.0% Initial Enrichment, 25 Year Cooled PWR Fuel (uniform, 32-assembly, 1.8 kW/MTU payload) (mrem/hr)

	Primary Fuel Gamma*	Assembly Hardware Gamma*	Neutron*	Secondary Gamma*	Total	10CFR71 Limit
NCT 2-meter Vertical Side Plane	0.97	0.31	3.19	1.10	5.57	10
NCT Package Radial Surface	0.30	3.91	17.96	0.96	23.13	200
NCT Package Bottom Surface	1.37	7.75	120.60	1.02	130.75	200
NCT Package Top Surface	0.41	4.45	62.64	0.52	68.02	200
NCT Cask Body Radial Surface	0.26	10.57	27.75	2.12	40.70	1000
HAC 1-meter Radial Surface	7.27	1.51	451.40	-	460.18	1000
HAC 1-meter Bottom Surface	2.91	17.26	226.95	-	247.12	1000
HAC 1-meter Top Surface	0.70	8.27	116.96	-	125.93	1000

*Presented values are those that occur at the location of peak total dose rate on the surface in question.

Table 4-32. Peak Cask Exterior Surface Dose Rates for 30 GWd/MTU, 2.25% Initial Enrichment, 5 Year Cooled BWR Fuel (uniform, 68-asssembly, 2.0 kW/MTU payload) (mrem/hr)

	Primary Fuel Gamma*	Assembly Hardware Gamma*	Neutron*	Secondary Gamma*	Total	10CFR71 Limit
NCT 2-meter Vertical Side Plane	4.83	1.21	1.03	0.41	7.48	10
NCT Package Radial Surface	0.53	28.12	3.45	0.22	32.32	200
NCT Package Bottom Surface	3.92	30.22	33.21	0.32	67.66	200
NCT Package Top Surface	1.37	23.42	11.66	0.12	36.57	200
NCT Cask Body Radial Surface	0.24	72.49	4.42	0.43	77.58	1000
HAC 1-meter Radial Surface	36.35	5.34	169.31	-	211.00	1000
HAC 1-meter Bottom Surface	5.82	54.35	94.23	-	154.39	1000
HAC 1-meter Top Surface	2.20	43.09	46.64	-	91.94	1000

*Presented values are those that occur at the location of peak total dose rate on the surface in question.

Table 4-33. Peak Cask Exterior Surface Dose Rates for 35 GWd/MTU, 2.5% Initial Enrichment, 6 Year Cooled BWR Fuel (uniform, 68-assembly, 2.0 kW/MTU payload) (mrem/hr)

	Primary Fuel Gamma*	Assembly Hardware Gamma*	Neutron*	Secondary Gamma*	Total	10CFR71 Limit
NCT 2-meter Vertical Side Plane	3.94	1.21	1.59	0.63	7.38	10
NCT Package Radial Surface	0.43	28.30	5.30	0.34	34.38	200
NCT Package Bottom Surface	3.00	30.41	51.02	0.49	84.92	200
NCT Package Top Surface	1.01	23.57	17.91	0.19	42.69	200
NCT Cask Body Radial Surface	0.18	72.96	6.79	0.66	80.59	1000
HAC 1-meter Radial Surface	29.76	5.37	260.15	-	295.28	1000
HAC 1-meter Bottom Surface	4.35	54.70	144.78	-	203.83	1000
HAC 1-meter Top Surface	1.53	41.22	74.61	-	117.36	1000

*Presented values are those that occur at the location of peak total dose rate on the surface in question.

Table 4-34. Peak Cask Exterior Surface Dose Rates for 40 GWd/MTU, 2.75% Initial Enrichment, 9 Year Cooled BWR Fuel (uniform, 68-assembly, 2.0 kW/MTU payload) (mrem/hr)

	Primary Fuel Gamma*	Assembly Hardware Gamma*	Neutron*	Secondary Gamma*	Total	10CFR71 Limit
NCT 2-meter Vertical Side Plane	2.62	0.85	2.12	0.84	6.44	10
NCT Package Radial Surface	0.27	19.86	7.09	0.46	27.68	200
NCT Package Bottom Surface	1.68	19.04	71.83	0.64	93.19	200
NCT Package Top Surface	0.54	14.89	25.82	0.25	41.50	200
NCT Cask Body Radial Surface	61.25	61.25	61.25	61.25	61.25	1000
HAC 1-meter Radial Surface	19.85	3.77	347.63	-	371.25	1000
HAC 1-meter Bottom Surface	2.49	38.38	193.47	-	234.33	1000
HAC 1-meter Top Surface	0.86	28.92	99.70	-	129.48	1000

*Presented values are those that occur at the location of peak total dose rate on the surface in question.

Table 4-35. Peak Cask Exterior Surface Dose Rates for 45 GWd/MTU, 3% Initial Enrichment, 11 Year Cooled BWR Fuel (uniform, 68-assembly, 2.0 kW/MTU payload) (mrem/hr)

	Primary Fuel Gamma*	Assembly Hardware Gamma*	Neutron*	Secondary Gamma*	Total	10CFR71 Limit
NCT 2-meter Vertical Side Plane	2.39	0.69	2.64	1.03	6.75	10
NCT Package Radial Surface	0.25	16.25	8.74	0.57	25.80	200
NCT Package Bottom Surface	1.46	15.59	88.51	0.79	106.34	200
NCT Package Top Surface	0.47	12.18	31.82	0.30	44.77	200
NCT Cask Body Radial Surface	0.10	41.89	11.18	1.08	54.25	1000
HAC 1-meter Radial Surface	18.13	3.09	428.39	-	449.60	1000
HAC 1-meter Bottom Surface	2.18	31.41	238.41	-	271.99	1000
HAC 1-meter Top Surface	0.75	23.66	122.86	-	147.28	1000

*Presented values are those that occur at the location of peak total dose rate on the surface in question.

Table 4-36. Peak Exterior Surface Dose Rates for 50 GWd/MTU, 3.0% Initial Enrichment, 13 Year Cooled BWR Fuel (uniform, 68-assembly, 2.0 kW/MTU payload) (mrem/hr)

	Primary Fuel Gamma*	Assembly Hardware Gamma*	Neutron*	Secondary Gamma*	Total	10CFR71 Limit
NCT 2-meter Vertical Side Plane	2.27	0.54	3.56	1.39	7.77	10
NCT Package Radial Surface	6.92	0.98	12.80	5.85	26.55	200
NCT Package Bottom Surface	1.35	12.32	119.45	1.06	134.18	200
NCT Package Top Surface	0.44	9.63	42.94	0.41	53.41	200
NCT Cask Body Radial Surface	0.09	33.11	15.09	1.46	49.75	1000
HAC 1-meter Radial Surface	17.22	2.44	578.11	-	597.77	1000
HAC 1-meter Bottom Surface	2.03	24.83	321.73	-	348.59	1000
HAC 1-meter Top Surface	0.70	18.71	165.80	-	185.21	1000

*Presented values are those that occur at the location of peak total dose rate on the surface in question.

Table 4-37. Peak Exterior Surface Dose Rates for 55 GWd/MTU, 3.25% Initial Enrichment, 17 Year Cooled BWR Fuel (uniform, 68-assembly, 2.0 kW/MTU payload) (mrem/hr)

	Primary Fuel Gamma*	Assembly Hardware Gamma*	Neutron*	Secondary Gamma*	Total	10CFR71 Limit
NCT 2-meter Vertical Side Plane	1.78	0.34	3.82	1.49	7.43	10
NCT Package Radial Surface	5.43	0.61	13.71	6.27	26.02	200
NCT Package Bottom Surface	1.04	7.70	128.00	1.14	137.88	200
NCT Package Top Surface	0.34	6.02	46.01	0.44	52.81	200
NCT Cask Body Radial Surface	7.79	0.81	25.11	10.24	43.95	1000
HAC 1-meter Radial Surface	13.50	1.52	619.52	-	634.55	1000
HAC 1-meter Bottom Surface	1.57	15.52	344.78	-	361.87	1000
HAC 1-meter Top Surface	0.55	11.69	177.68	-	189.92	1000

*Presented values are those that occur at the location of peak total dose rate on the surface in question.

Table 4-38. Peak Exterior Surface Dose Rates for 60 GWd/MTU, 3.5% Initial Enrichment, 22 Year Cooled BWR Fuel (uniform, 68-assembly, 2.0 kW/MTU payload) (mrem/hr)

	Primary Fuel Gamma*	Assembly Hardware Gamma*	Neutron*	Secondary Gamma*	Total	10CFR71 Limit
NCT 2-meter Vertical Side Plane	1.30	0.18	3.78	1.49	6.76	10
NCT Package Radial Surface	3.99	0.34	13.60	6.22	24.14	200
NCT Package Bottom Surface	0.78	4.21	126.93	1.13	133.05	200
NCT Package Top Surface	0.25	3.29	45.63	0.43	49.60	200
NCT Cask Body Radial Surface	5.73	0.44	24.90	10.16	41.23	1000
HAC 1-meter Radial Surface	9.94	0.83	614.31	-	625.09	1000
HAC 1-meter Bottom Surface	1.17	8.48	341.88	-	351.53	1000
HAC 1-meter Top Surface	0.41	6.39	176.19	-	182.98	1000

*Presented values are those that occur at the location of peak total dose rate on the surface in question.

Table 4-39. Peak Exterior Surface Dose Rates for 62.5 GWd/MTU, 3.5% Initial Enrichment, 25 Year Cooled BWR Fuel (uniform, 68-assembly, 2.0 kW/MTU payload) (mrem/hr)

	Primary Fuel Gamma*	Assembly Hardware Gamma*	Neutron*	Secondary Gamma*	Total	10CFR71 Limit
NCT 2-meter Vertical Side Plane	1.08	0.13	4.00	1.58	6.80	10
NCT Package Radial Surface	3.34	0.24	14.39	6.58	24.54	200
NCT Package Bottom Surface	0.67	2.95	134.31	1.19	139.13	200
NCT Package Top Surface	0.21	2.31	48.28	0.46	51.26	200
NCT Cask Body Radial Surface	4.79	0.31	26.35	10.75	42.20	1000
HAC 1-meter Radial Surface	8.31	0.58	650.06	-	658.95	1000
HAC 1-meter Bottom Surface	1.00	5.95	361.77	-	368.72	1000
HAC 1-meter Top Surface	0.34	4.49	186.44	-	191.27	1000

*Presented values are those that occur at the location of peak total dose rate on the surface in question.

4.3.3.6 Shield Penetrations and Streaming Issues

In the Section 4.1 cask configuration, the top and bottom ends of the radial gamma shield are flush with the top and bottom ends of the payload source regions (i.e., the assembly top and bottom nozzle source regions). Thus, there is a significant potential for gamma streaming over the top and bottom ends of the radial gamma shield

The R-Z shielding analyses presented in Section 4.3.3.4 evaluate those potential impacts. The analyses initially modeled the Section 4.1 cask configuration and showed unacceptable dose rates on the 2-meter vertical plane, due to gamma streaming over the radial gamma shield ends.

Several minor changes to the cask could be made to address this issue. Those changes would be chosen and made during the formal cask design and licensing process. Potential changes include extending the top of the lead shield above the top of the source zone, having the increase in steel thickness at the axial ends of the cask inner liner be placed on the inside of the liner as opposed

to the outside (where it replaces lead), placing additional gamma shielding (e.g., steel) on the outside of the cask body, or placing localized steel shielding around the basket edge.

The last of the options was chosen as the basis for shielding analyses presented in Section 4.3.3.4 . There is room around the edge of the basket for such shielding (around most of the azimuth, at least). This change would have minimal impact on the cask design and licensing analyses (in other disciplines, etc.). As shown in Figure 4-48, which shows a close up of the cask cavity top corner region in the shielding model, a steel ring has been added in the model. The ring is two inches thick and five inches high. It would add 611 pounds to the cask weight. It would hang down from the cask lid, just as the assembly axial spacers will. It should not significantly impact operations, nor will it significantly impact the cask system structural, thermal or criticality evaluations.

A similar streaming problem occurred at the cask bottom end. To address this, the bottom of the radial lead shield is moved down by one inch. Also, a steel ring that is one inch thick and five inches high is added to the bottom edge of the cask cavity. This ring weighs 310 pounds, bringing the total weight of the top and bottom rings to almost 1000 pounds (which is still a small fraction of the available cask weight margin). These changes are illustrated in Figure 4-49 which shows a close up of the cask cavity bottom corner region in the shielding model. These changes will have no significant impact on the thermal or criticality performance of the cask. Structurally, there is no reason why the bottom of the lead could not be moved down.

Gamma and Neutron Shield Penetrations

The cask configuration described in Section 4.1 features a significant steel penetration into the radial neutron shield for the bottom rotation trunnion pocket. There is also a large steel penetration in the radial lead shield, and a large air penetration in the radial neutron shield, in the vicinity of the cask top trunnion. Simple, conservative, R-Z analyses were performed to evaluate the shielding impact of these penetrations and found that they would result in unacceptable cask exterior dose rates, by a wide margin. As these penetrations are localized, detailed 3-D shielding analyses would likely show a smaller impact, but the cask dose rates are likely to remain unacceptable. Thus additional shielding features will have to be incorporated into the final, detailed cask design.

There are many options for addressing the penetrations discussed above. The bottom rotation trunnion could be replaced by some type of saddle configuration. Options include removable trunnions, saddles in lieu of rotation trunnions, trunnions with internal shielding, and localized shielding that could be placed either inside the cask cavity or attached to the final cask configuration after it is loaded onto the railcar. Experienced cask vendors (e.g., NAC International) have dealt with similar issues before, and have been able to develop solutions to such streaming issues. Therefore, these issues should be able to be addressed in the detailed cask design and licensing phase.

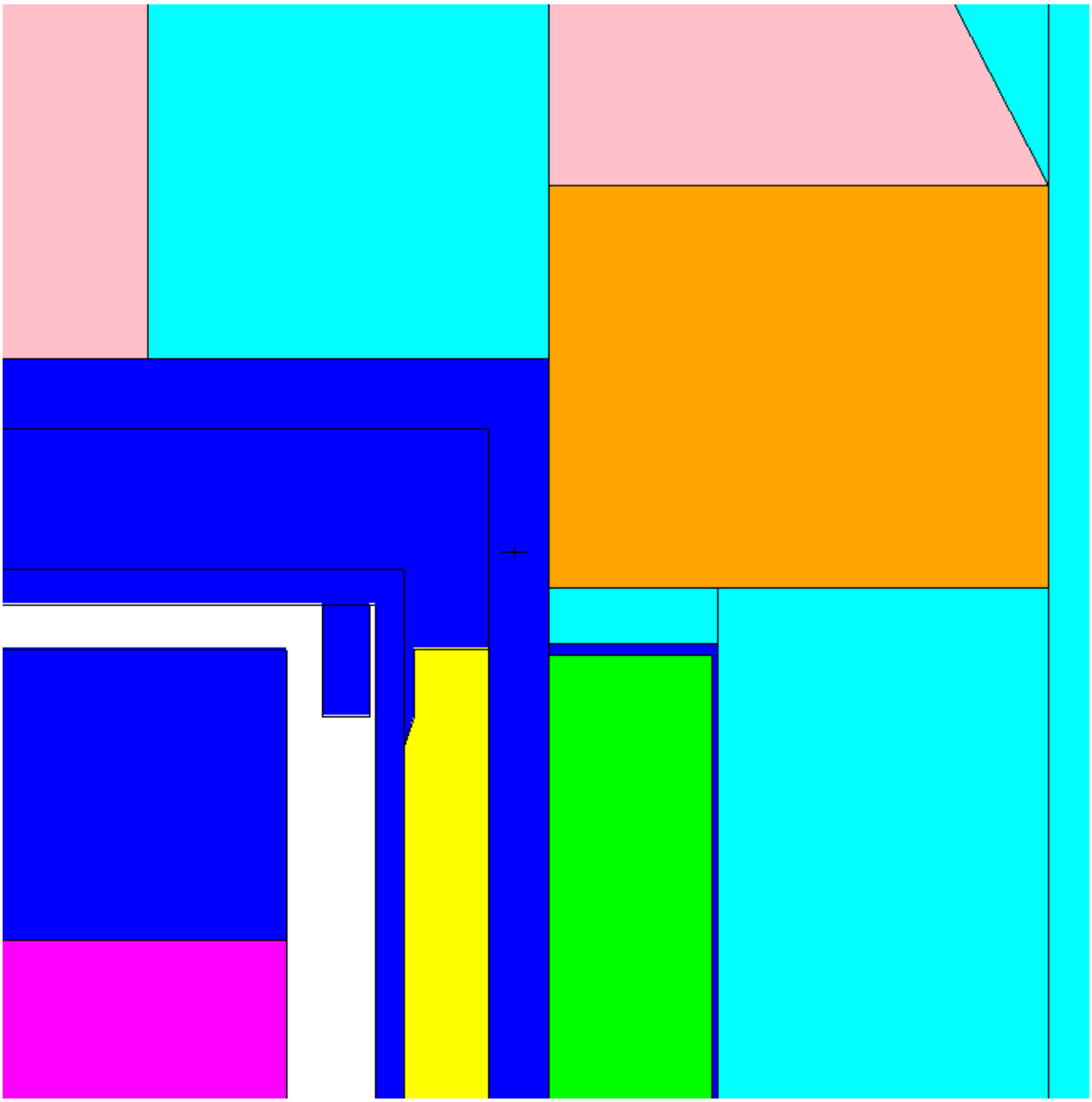

Figure 4-48. Basket Top Corner Shield Ring Illustration

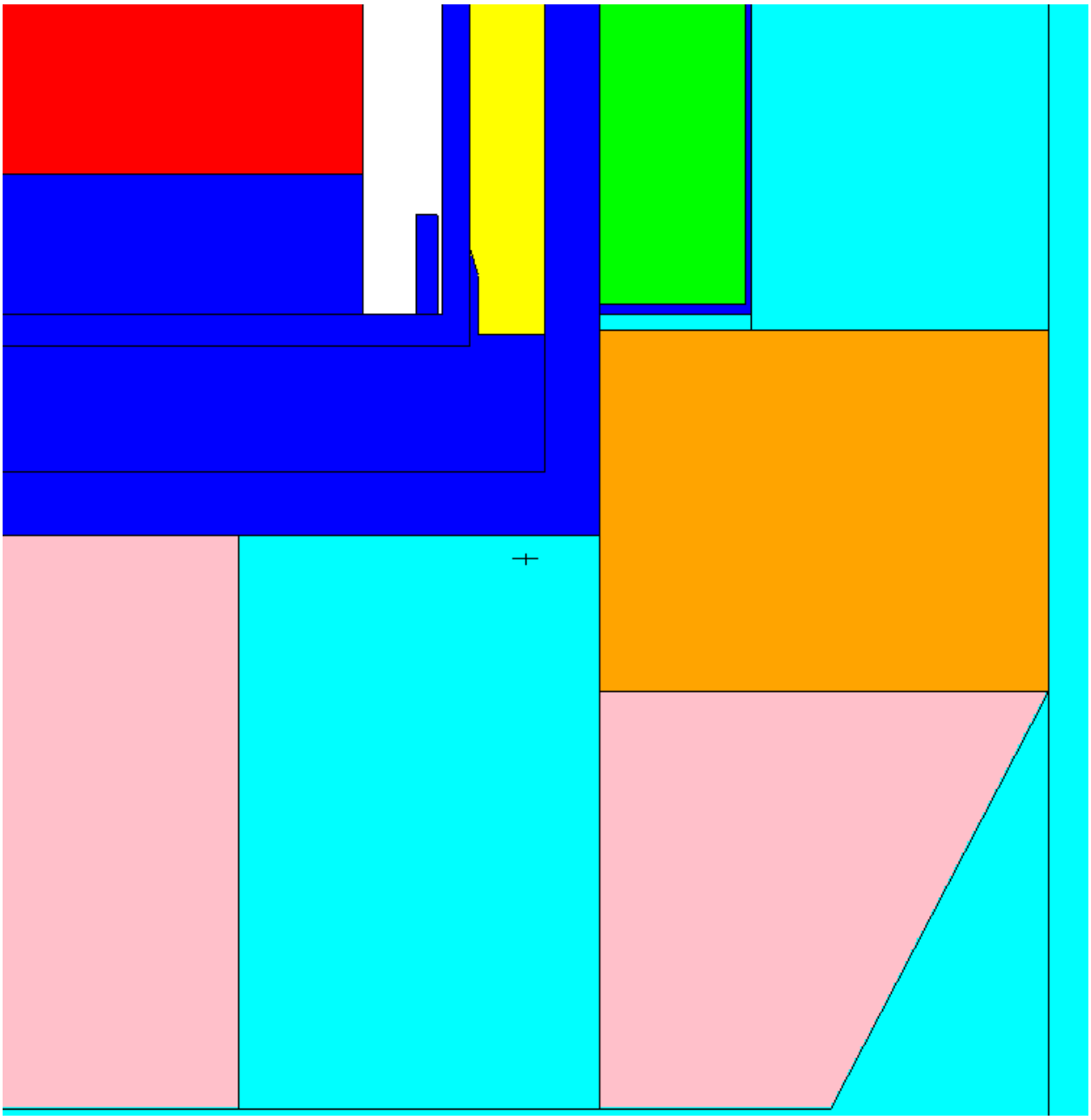

Figure 4-49. Basket Bottom Corner Shield Ring Illustration

4.3.3.7 Zone Loading Evaluations

The Section 4.2 loading specifications allow any assembly payload whose overall heat generation level is less than 24 kW, with one exception. Fuel assemblies loaded in the outer periphery of the basket must not have fuel heat generation levels in excess of 1.8 kW/MTU for PWR fuel or 2.0 kW/MTU for BWR fuel. (Those fuel heat generation levels correspond to the average assembly heat generation level for a 24 kW full payload, at lower bound assembly uranium loadings.) Assemblies loaded in the center cells of the basket may be loaded with fuel

having a burnup level up to 62.5 GWd/MTU, and a cooling time as low as 5 years, which corresponds to a much higher fuel heat generation level. Shielding evaluations that model zone-loaded payload configurations are performed to demonstrate that any payload that meets the requirements discussed above produces acceptable cask exterior dose rates.

The zone loading evaluations are performed for the 32P basket. The first case analyzed is a case where 62.5 GWd/MTU, 5 year cooled assemblies are loaded into the 12 center cells of the basket. The 20 periphery cells are loaded with either infinitely cold fuel assemblies (with zero source) or steel dummy blocks of roughly equal mass. As the 62.5 GWd/MTU, 5 year cooled PWR assemblies have a heat generation level of approximately 2.0 kW, this corresponds to an overall payload heat generation level of 24 kW. Additional cases model zone loaded configurations where the basket is divided into three zones, a center zone that represents the inner four cells, an annular zone that represents the eight surrounding cells, and an outer zone that represents the 20 basket periphery cells. Different types of assemblies (with different heat and source levels) are loaded into the three zones.

Since the overall heat generation level is fixed at 24 kW, the source strengths roughly vary with fuel heat generation level, and the zone loaded configurations load hotter fuel in the basket center and colder fuel around the periphery, it is expected that zone loaded configurations will produce lower cask exterior side (radial) dose rates than the uniform assembly payloads evaluated in Section 4.3.3.4. Package end dose rates (around the cask centerline) are expected to increase somewhat, due to the concentration of source strength in the center of the basket. The results of the zone loaded payload evaluations presented in this section demonstrate that this is the case.

The overall conclusions of these evaluations are assumed to apply for the 28P, 68B and 61B baskets as well, since there are no large or fundamental differences between the baskets that would result in the above principle (that moving source towards the basket center reduces side dose rates) not applying.

Partial Payload of Bounding Assemblies

This analysis evaluates the 32P basket with 62.5 GWd/MTU, 5 year cooled assemblies (with a lower-bound initial enrichment of 4.0% conservatively modeled) loaded into the center 12 basket cells. No source is modeled in the outer 20 cells of the basket.

With respect to the material composition modeled in the outer region of the basket, either PWR assemblies (with no source) are modeled, or steel dummy blocks of equal weight are modeled. The case of assemblies with negligible source (and heat) must be considered, as such a payload would be allowed by the loading specification. Shielding evaluations show that the two material compositions (for the basket periphery) yield similar cask exterior gamma dose rates, while the PWR assembly material composition yields higher cask exterior neutron dose rates. Thus, the partial payload shielding evaluation models the same PWR assembly material composition in both the (inner) source zone and the (outer) no-source zone of the basket.

Other than the radial distribution of the source strengths within the basket (cask interior), the analyses use the same methodologies used in the primary analyses presented in Section 4.3.3.4. The gamma and neutron sources from the fuel, along with the (Co-60) gamma sources from the three assembly non-fuel zones are included. The fuel gamma, fuel neutron, and assembly

hardware sources are calculated for 62.5 GWd/MTU, 4.0% enriched, 5 year cooled fuel. Axial burnup profile effects are modeled.

The dose rate results of the partially loaded 32P basket analysis (for NCT) are presented in Table 4-40. The results show that the peak cask side dose rates, on both the 2-meter plane and the package radial surface, are significantly lower than those shown for the uniformly loaded cases in Section 4.3.3.4. This is due to significant shielding of the basket center sources, in the radial direction, by the assembly materials in the outer section of the basket (which has no source). The results show that, with respect to radial cask exterior dose rates, the "worth" of source strengths in the center of the basket are much less than that of sources within the basket periphery cells

The peak dose rates on both radial surface occur above the axial center of the cask, closer to the assembly top nozzle region. The assembly hardware and neutron dose rates are the main contributors, which suggests a significant contribution from the assembly top nozzles. A dose rate peak near or over the top nozzles is not unexpected for the partially loaded case, since the (modeled) nozzles in the basket periphery zone have a lower mass/density than the core zone of the fuel assembly. Thus, the degree of shielding by the basket periphery zone is less within the assembly nozzle regions is less than that which occurs over most of the fuel assembly length. This leads to a higher contribution to radial cask exterior dose rates by the assembly nozzles in the basket center.

The Table 4-40 results also show an increase in the peak top and bottom package surface dose rates (i.e., the peak dose rates on the axial ends of the impact limiters). Due to the radial concentration of the source within the basket center, the sources have a shorter (less diagonal) path through the end shielding materials, which results in an increase in the dose rate on the package ends at the cask centerline. The Table 4-40 results show that for the partially loaded case, the peak dose rate on the package ends shifts to the cask center line (as opposed to over the annular gap in the impact limiter foam), and are higher than the peak dose rate values shown for any of the uniform loading cases in Section 4.3.3.4. Peak package top end dose rates remain under the 200 mrem/hr limit, but the peak package bottom end dose rates increase to 333.48 mrem/hr, which exceeds the limit. It should be noted that while the peak dose rate increases, the dose rate profile is more peaked (i.e., the dose rates are more localized at the basket center). Overall (surface average) dose rates on the package ends do not increase significantly. Dose rates around the edge of the package ends, where personnel are more likely to be present, are actually lower.

The elevated peak dose rates seen on the package bottom end could be brought below the limit by adding approximately 0.5 inches of steel to the cask bottom end shielding. The additional steel would only have to extend out to a radius of approximately 20-25 inches from the cask centerline (as the source is concentrated within the basket center). This additional shielding would add approximately 200 pounds to the cask weight, which is very small compared to the available weight margin.

Finally, it should be noted that the peak package bottom end dose rates presented in Table 4-40 are based on a PWR assembly bottom nozzle cobalt quantity of 12.76 grams, which is the bounding value shown for all PWR fuel in the DOE reference[12], which is a 1987 document. As efforts are being made to reduce cobalt content in LWR assembly hardware, there is a good

chance that any PWR assembly that is only 5 year cooled at the time of shipment in the proposed cask will have a significantly lower bottom nozzle cobalt content, and therefore a much lower bottom nozzle Co-60 source strength than what was modeled in this evaluation. Thus, the actual peak dose rate on the package bottom end will actually be under the regulatory limit. Therefore, this may not even be a real problem that requires a change in the cask shielding configuration.

The partially loaded configuration will meet the HAC dose rate limits. For HAC, dose rates are closest to their limit on the cask side, and cask side dose rates are much lower for the partially loaded cask configuration. Dose rates on the package ends are somewhat higher, but this will not result in dose rates one meter from the cask ends, under HAC, to exceed their limit, as HAC cask dose rates are under their limits by a wide margin.

Table 4-40. Peak Cask Exterior Surface Rates for 12 Assemblies in 32P Basket Center 62.5 GWd/MTU, 4.0% Initial Enrichment, 5 Year Cooled PWR Fuel (mrem/hr)

	Primary Fuel Gamma*	Assembly Hardware Gamma*	Neutron*	Secondary Gamma*	Total	10CFR71 Limit
NCT 2-meter Vertical Side Plane	0.21	1.44	1.71	0.38	3.73	10
NCT Package Radial Surface	1.79	9.36	14.10	0.72	25.97	200
NCT Package Bottom Surface	30.90	277.33	23.99	1.27	333.48	200
NCT Package Top Surface	6.23	145.79	11.18	0.67	163.87	200
NCT Cask Body Radial Surface	1.70	13.94	21.21	1.60	38.45	1000

*Presented values are those that occur at the location of peak total dose rate on the surface in question.

Example Zone Loaded Full Payload

An example of a full (32-assembly payload) that employs zone loading is evaluated in this sub-section. Twelve 62.5 GWd/MTU, five year cooled assemblies produce 24 kW of heat by themselves, so any fully-loaded, zone-loaded payload would have to have less than 12 such assemblies.

In this example, there are eight 62.5 GWd/MTU, five year cooled assemblies loaded in the middle zone, i.e., the eight basket cells that surround the center four cells. In this example, no assemblies (or assemblies with a negligible heat load) are modeled in the center four cells. This is something that may be done, in actual payloads, in order to limit peak temperatures within the basket. The eight 62.5 GWd/MTU, five year cooled assemblies have an overall heat generation level of approximately 16 kW, leaving approximately 8 kW for the remaining 20 assemblies in the basket periphery cells. That corresponds to 0.4 kW/assembly. Very long cooling times are required for PWR assemblies to fall to that level of heat generation. In this example, the periphery is filled with 40 GWd/MTU, 3.0% enriched, 30 year cooled fuel, which has an assembly heat load close to 0.4 kW (even at a lower-bound assembly uranium loading).

The dose rate results (for NCT) for this example zone-loaded configuration are presented in Table 4-41. As with the partially loaded case, the dose rates on the cask side surfaces (package and 2-meter plane) are lower than those produced by the uniform payload cases. On the package ends, the peak dose rates still occur at the cask centerline location, but are lower than those of the partially loaded case. This is due to the removal of the source from the four basket center cells, which lie directly below/above the peak dose rate location. Dose rates on the cask side surfaces

lie close to or over the assembly top nozzle zone, with the top nozzle being a significant contributor at the peak dose rate location.

For reasons similar to those given for the partially loaded case (above), this example zone loaded configuration will not yield HAC dose rates in excess of regulatory limits.

Table 4-41. Peak Cask Exterior Surface Dose Rates for Zone-Loaded 32P Basket Center 12 Cells: 62.5 GWd/MTU, 4.0% Initial Enrichment, 5 Year Cooled PWR Fuel 20 Periphery Cells: 40 GWd/MTU, 3.0% Initial Enrichment, 30 Year Cooled PWR Fuel (mrem/hr)

	Primary Fuel Gamma*	Assembly Hardware Gamma*	Neutron*	Secondary Gamma*	Total	10CFR71 Limit
NCT 2-meter Vertical Side Plane	0.35	1.22	1.37	0.31	3.26	10
NCT Package Radial Surface	1.86	8.20	10.72	0.55	21.33	200
NCT Package Bottom Surface	20.90	164.01	16.99	0.91	202.81	200
NCT Package Top Surface	6.48	88.30	8.08	0.49	103.34	200
NCT Cask Body Radial Surface	1.77	12.18	15.98	1.19	31.12	1000

*Presented values are those that occur at the location of peak total dose rate on the surface in question.

This case provides another illustration of how moving heat generation, and its associated source, towards the center of the basket, and placing “cold” assemblies around the basket periphery reduces cask side dose rates. Many other possible zone loaded combinations and sets of fuel parameters (burnup, enrichment and cooling time) are possible, but it can be concluded that if the overall heat load is set at 24 kW (or less), any zone loaded configuration where the hotter assemblies are moved into the basket center will produce lower cask side dose rates. As for the package ends, the partially loaded case where twelve 62.5 GWd/MTU, 5 year cooled assemblies are concentrated in the basket center is clearly the bounding case that will maximize those dose rates. These conclusions are based on an assumption of azimuthal symmetry, however, i.e., uniform assembly heat generation within each zone. Potential effects from non-azimuthally symmetric payloads are addressed in the next section.

Bounding (Artificial) Zone Loaded Cases

The Section 4.2 fuel loading specifications limit the overall payload heat generation level to 24 kW, limit the cask’s center basket locations to a burnup of no more than 62.5 GWd/MTU and a cooling time of no less than 5 years, and limit the heat generation level of assemblies on the basket periphery to no more than 1.8 kW/MTU for PWR fuel and 2.0 kW/MTU for BWR fuel. The evaluations presented in the previous sub-sections show that, assuming each of the three basket zones has a uniform (heat/source) loading, the cask exterior dose rate limits will not be exceeded for any payload that meets the above specification requirements.

However, variations in the assembly contents within each zone (i.e., azimuthal variations in the source strength present in each radial zone) could cause higher peak cask exterior dose rates while staying within the limits of the specification. Consider the following example. A cask is loaded so that very cold (approximately zero source/heat) assemblies are loaded into the entire left half of the basket (with cold assemblies in all three radial zones on the left side of the basket). On the right side (or half) of the basket, the inner two zones are filled with six 62.5 GWd/MTU, 5 year cooled assemblies. Ten assemblies with the maximum allowable fuel

heat generation level (of 1.8 kW/MTU for PWR fuel) could be loaded into the right-side basket periphery cells and the overall payload heat generation level would still be under 24 kW. Such a configuration could yield higher dose rates on the cask's right side, that may be over the regulatory limits, even though the payload meets the fuel specification requirements.

To evaluate such possible configurations, shielding analyses are performed on very conservative, artificial configurations where 62.5 GWd/MTU, 5 year cooled fuel is loaded into all twelve non-periphery cells of the 32P basket. Then, 1.8 kW/MTU fuel is loaded into all 20 of the basket periphery cells. This bounds any potential azimuthal variations within the zones by placing the hottest allowable assembly in every individual basket cell (while ignoring the 24 kW heat limit for the overall payload). These cases are artificial in that they exceed the overall heat generation limit by a wide margin. The twelve center assemblies alone generate 24 kW. Even at minimum assembly uranium loading, the 20 basket periphery cells each generate 0.75 kW, resulting in a total periphery heat generation level of 15 kW. Thus, the modeled payload would actually have a heat generation level of 39 kW, well over the 24 kW limit.

A series of eight cases are analyzed. For all eight cases, the twelve center basket cells contain 62.5 GWd/MTU, 5 year cooled fuel. For the 20 basket periphery cells, the eight combinations of burnup, initial enrichment and cooling time, which all yield 1.8 kW/MTU and are evaluated for the uniform payload configuration in Section 4.3.3.4, are modeled.

The NCT peak 2-meter plane dose rate results of these shielding evaluations are presented in Table 4-42. The peak NCT package side dose rate results are presented in Table 4-43.

The Table 4-42 results show that the 2-meter dose rates exceed the 10 mrem/hr limit for the three low PWR burnup level cases (i.e., 30, 35, and 40 GWd/MTU). They only exceed the limit by a small amount, however, with the maximum dose rate (for the 30 GWd/MTU case) being 11.2 mrem/hr. The peak dose rates occur near the axial center of the cask. As shown in Table 4-43 package side surface dose rates (which occur over the assembly top nozzle zone) are under the 200 mrem/hr limit by a wide margin. Dose rates on the cask body side surface will be under the 1000 mrem/hr limit by an even wider margin.

Table 4-42. Peak NCT 2-meter Side Surface Dose Rates for Bounding (Artificial) Zone-Loaded 32P Basket Payload Configurations (Center 12 Cells Contain 62.5 GWd/MTU, 4.0% Initial Enrichment, 5 Year Cooled PWR Fuel – All Cases)

Periphery Cell Fuel Parameters			Peak Dose Rate (mrem/hr)					
Burnup (GWd/MTU)	Initial Enrichmt (% ^{235}U)	Cooling Time (year)	Primary Fuel Gamma*	Assembly Hardware Gamma*	Neutron*	Secondary Gamma*	Total	10CFR71 Limit
30	2.5	5	5.09	3.08	2.16	0.85	11.19	10
35	2.75	6	3.85	3.10	2.49	0.95	10.40	10
40	3.0	7	3.40	2.87	2.83	1.06	10.17	10
45	3.25	10	2.47	2.16	3.36	1.24	9.24	10
50	3.5	13	2.09	1.64	3.64	1.33	8.71	10
55	3.75	18	1.57	1.11	3.78	1.37	7.84	10
60	4.0	23	1.23	0.82	3.81	1.39	7.24	10
62.5	4.0	25	1.12	0.75	4.02	1.45	7.35	10

*Presented values are those that occur at the location of peak total dose rate on the surface in question.

Table 4-43. Peak Package Side Surface Dose Rates for Bounding (Artificial) Zone-Loaded 32P Basket Payload Configurations (Center 12 cells Contain 62.5 GWd/MTU, 4.0% Initial Enrichment, 5 Year Cooled PWR Fuel – All Cases)

Periphery Cell Fuel Parameters			Peak Dose Rate (mrem/hr)					10CFR71 Limit
Burnup (GWd/MTU)	Initial Enrichmt (% ^{235}U)	Cooling Time (year)	Primary Fuel Gamma*	Assembly Hardware Gamma*	Neutron*	Secondary Gamma*	Total	
30	2.5	5	3.42	38.13	16.82	0.87	59.24	200
35	2.75	6	3.01	38.32	18.36	0.95	60.64	200
40	3.0	7	2.85	35.79	19.98	1.04	59.66	200
45	3.25	10	2.51	28.32	22.39	1.18	54.40	200
50	3.5	13	2.38	22.50	23.70	1.25	49.83	200
55	3.75	18	2.22	16.56	24.34	1.28	44.41	200
60	4.0	23	13.30	24.50	1.29	41.21	13.30	200
62.5	4.0	25	2.09	12.51	25.51	1.35	41.46	200

*Presented values are those that occur at the location of peak total dose rate on the surface in question.

Package end surface dose rates are not presented for these artificial (39 kW) payload configurations. The reason for this is that while azimuthal variations within the radial zones may cause elevated dose rates on one side of the cask (as shown by the example discussed above), such azimuthal variations would not cause a significant increase in package end dose rates. This is due to the fact that the package end peak dose rate location lies close to the cask centerline at a significant (axial) distance from the payload. As a result, the contribution to package end dose rates from a given individual assembly do not vary significantly with that assembly's azimuthal location within the basket (i.e., all assemblies within a given radial zone are of roughly equal "worth").

The way to maximize the package end peak dose rates, for any payload with a 24 kW total heat generation level, is to concentrate all of that heat (and associated source) into the basket center. Thus, as discussed in the last sub-section, the case of twelve 62.5 GWd/MTU, 5 year cooled assemblies loaded in the center twelve cells of the basket is the bounding configuration that will produce maximum package end surface dose rates. This is true for *any* 24 kW payload. Thus, package end peak surface dose rates in excess of the values shown in Figure 4-40 should not occur for any 24 kW payload, regardless of the distribution of assemblies (radial or azimuthal) within that payload.

Several approaches could be taken to address the fact that the dose rates for some of these very conservative, artificial configurations produce dose rates slightly in excess of the 10 mrem/hr limit on the 2-meter side plane. A small amount of additional gamma shielding could be added. As little as 1/8 inch of lead may be sufficient. That would add approximately 2300 lbs. to the cask. Lower assembly hardware cobalt concentrations could also lead to dose rates under the limit.

If dose rates for the extreme payload configurations modeled in this section cannot be brought under 10 mrem/hr, then some additional restrictions on payload configuration may be necessary. Specifically, restrictions would be imposed on the azimuthal locations, within each radial zone, in which the hotter assemblies may be loaded. Loading all the hot assemblies on one side of the

cask would not be allowed. Ideally, the hottest assemblies would be loaded in the upper or lower azimuthal sections of the basket, as opposed to the left or right sides of each radial zone, which lie closest to the 2-meter side plane.

It should be noted that assemblies with burnup levels of 40 GWd/MTU or less, that have a low cooling time, will be rare at the time the proposed cask system would be loaded. Thus, this may not be a significant issue. From a licensing perspective, the issue could be resolved by requiring slightly longer cooling times for such rare, low burnup fuel. An increase of only one year would likely be sufficient.

4.3.4 **Criticality Analyses**

Criticality analyses have been performed on the cask and basket designs described in Sections 4.1.1 and 4.1.2, using the industry-standard MCNP5 Monte Carlo code.

The focus of the criticality analyses performed for this report is to determine if the four proposed basket designs offer adequate criticality performance, and to estimate the fraction of the US PWR and BWR used fuel inventory can be accommodated by the baskets. The degree of payload reduction, if any, which is necessary to accommodate the fuel inventory, is also estimated. Thus, the analyses performed model the configurations known to be the limiting configurations that govern basket criticality performance (e.g., an infinite array of casks with full density water completely filling the cask interior).

The overall analysis methodology for the PWR and BWR basket differ significantly, due to the fact that burnup credit criticality evaluations is performed for the PWR basket licensing evaluation, whereas simple, unburned fuel criticality analyses is performed to qualify the BWR baskets. The analysis methodology, and results, for the PWR and BWR criticality evaluations are presented in the sub-sections below.

4.3.4.1 PWR Criticality Evaluation

As the proposed high-capacity PWR baskets do not feature flux traps, the (future) criticality licensing evaluations will have to employ burnup credit criticality analyses. Such analyses are quite involved and time consuming, and are therefore not performed as part of this DOE report.

Therefore, to estimate the criticality performance of the proposed 32P and 28P baskets described in Section 4.1.2, criticality analyses are performed to estimate their reactivity *relative* to NAC International's MAGNATRAN system, a similar, existing PWR basket for which burnup credit licensing evaluations have been performed. The MAGNATRAN transportation (10 CFR 71) SAR[14] presents maximum allowable assembly initial enrichment values as a function of assembly burnup, for each major US PWR assembly type. If these relative reactivity analyses show that the 32P and 28P baskets are no more reactive than the MAGNATRAN basket, then their applicable burnup curves (i.e., maximum allowable initial enrichment levels for given burnup levels) will be similar to or better than those presented in the MAGNATRAN SAR.

[14] MAGNATRAN Transport Cask SAR, Revision 12A, October 2012, NRC Docket No. 71-9356, NAC International.

MAGNATRAN Criticality Models

The first step in the process is to develop a criticality model of the MAGNATRAN basket configuration, as described in the MAGNATRAN SAR[14], to determine a raw k_{eff} value which corresponds to that configuration. There are actually two basket configurations for which the MAGNATRAN SAR presents burnup curves (for each PWR assembly type), an intact PWR assembly basket, and a damaged PWR fuel basket, for which damaged assembly arrays inside damaged fuel cans are modeled in four corner cells of the (37-assembly) basket.

For the intact assembly slots, the MAGNATRAN licensing analyses modeled spent fuel isotopic compositions that correspond to the assembly average burnup and initial enrichment values along their specified burnup curves. For each analysis, 18 axial zones are defined within the fuel, each with its own modeled fuel isotopic composition, to model the effects of the assembly axial burnup profile. For the four damaged assemblies in the corner locations of the damaged fuel basket, a very conservative isotopic composition that corresponds to approximately 4.0% enriched, 5 GWd/MTU fuel was modeled, over the entire axial length of the assembly.

For this evaluation, the intact and damaged fuel MAGNATRAN basket configurations are modeled with W 15×15 Std., Zircaloy-clad fuel assemblies. The intact basket configuration is modeled with two fuel material compositions, 1.9% enriched unburned UO_2 fuel, and spent fuel with an 18-axial-zone set of isotopic compositions that correspond to 4.0% enriched, 45 GWd/MTU fuel. The damaged fuel basket configuration is modeled with the 45 GWd/MTU fuel composition (only). No fuel depletion analyses are performed to determine the fuel isotopic compositions that correspond to 5.0% enriched, 45 GWd/MTU fuel. The 18-axial-zone set of isotopic compositions used in the MAGNATRAN licensing evaluation have been directly provided by NAC International, for use in this evaluation.

These two sets of fuel parameters reflect the two ends of the burnup curve presented in the MAGNATRAN SAR for (intact) W 15×15 fuel. This will allow a reactivity comparison, between MAGNATRAN and the 32P and 28P baskets, for both extremes of the burnup curve, i.e., low/zero burnup with low enrichment, and maximum burnup with maximum enrichment. It is assumed that if the 32P and 28P baskets are shown to be no more reactive than MAGNATRAN, for W 15×15 fuel, at both ends of the MAGNATRAN burnup curve, then the burnup curves presented in the MAGNATRAN SAR, for all PWR assembly types, are likely to be very similar to the burnup curves that would apply for the 32P and 28P baskets.

It should be noted that k_{eff} values calculated using the above (MAGNATRAN) criticality models are raw k_{eff} values that do not correspond to the final k_{eff} values determined by burnup credit licensing evaluations. With burnup credit criticality evaluations, several k_{eff} penalties are applied to account for biases and uncertainties in both the fuel depletion and criticality codes, and effects such as radial burnup variations in the fuel rod arrays, assembly component dimensional tolerances, and potential misleading of under-burned assemblies. Thus, the k_{eff} values are somewhat lower than typical maximum allowable k_{eff} values. It should also be noted that the objective of these criticality evaluations is not to estimate system absolute k_{eff} values, but to estimate the relative impact, on k_{eff}, of the changes in basket geometry between MAGNATRAN and the 32P and 28P baskets. This is done through a comparison of raw k_{eff} values.

32P and 28P Basket Models

Once the raw k_{eff} values were determined for the MAGNATRAN configurations, the 32P and 28P basket and cask configurations described in Sections 4.1.1 and 4.1.2 were rigorously modeled, and similar raw k_{eff} values are determined for comparison.

As discussed in Section 4.1.2, the (borated aluminum) neutron absorber plates range from 0.125 inches thick to 0.5 inches thick in the 32P and 28P baskets. For all cases, the B-10 density in the borated aluminum material is modeled at 0.1125 g/cc. This is based upon an actual B-10 concentration of 0.125 g/cc that has been reduced by 10% to account for variations in B-10 concentration within the plates (as is required by NRC). It is assumed that borated aluminum plates with a B-10 concentration of 0.125 g/cc will be available, as that is the concentration in the borated aluminum neutron absorber sheets used in the (commercially available) MAGNATRAN basket.

All 32P basket analyses model bare fuel assemblies (not in DFCs) in the 24 basket center locations, and damaged fuel, in DFCs, in the eight basket edge (corner) locations. Only the eight edge cells of the 32P basket are large enough to accommodate damaged fuel cans. All 28P analyses model partially or fully reconfigured (damaged) fuel in all 28 basket locations. Bare, intact PWR fuel can be loaded into any 28P basket location, but those assembly configurations are clearly bounded by (i.e., less reactive than) the reconfigured assembly configurations that are analyzed, so they need not be evaluated.

For the 32P and 28P baskets, several different configurations have been modeled, which reflect various licensing contingencies. The evaluations of these alternative cases allow the impacts of various licensing contingencies (concerning how high burnup and/or damaged fuel are treated, for example) will affect system performance. These specific evaluations are described in the sections below.

32P – Mixture of Intact Assemblies and Fuel Rubble

This configuration evaluates what is considered to be the most likely contingency where the 32P basket is used. It models intact (W 15×15) PWR fuel assemblies in the center 24 basket locations, and models optimum-pitch pellet arrays inside DFCs in the eight basket edge cells.

This evaluation models fuel rubble, inside DFCs, in the eight 32P basket edge (corner) cells because if the 32P basket is used, it will have to have some cells available for DFCs containing damaged fuel. Regardless of how (initially intact) high burnup fuel is treated, some small fraction of the fuel inventory will be actually damaged, prior to loading. All such fuel will have to be loaded into DFCs, and some fuel will be potentially subject to an arbitrary degree of reconfiguration under HAC.

To bound these potential reconfigured assembly configurations, an optimum-pitch fuel pellet array that completely fills the DFC interior is modeled. The rod cladding is conservatively removed. The pellet array pitch is adjusted until maximum reactivity (k_{eff}) is produced; regardless of whether the pitch corresponds to more or less fuel material than is actually in the assembly. This represents the most reactive possible configuration of the fuel material, and bounds any potential assembly configuration.

Two analyses with the above geometric configuration are performed, one which models the fuel material as 1.9% unburned UO_2 fuel, and one which models 18 axial assembly fuel zones (with 18 different isotopic compositions) that correspond to an assembly average burnup of 45 GWd/MTU and an assembly initial U-235 enrichment of 5.0%. These two cases represent the two extremes of the (W 15×15 assembly) burnup curve for the MAGNATRAN intact fuel basket.

For the 45 GWd/MTU fuel case, the same 18-zone axial isotopic composition profile that is modeled for the intact assemblies (in the 24 basket center cells) is also modeled for the optimum pitch pellet arrays modeled within DFCs in the eight basket corner cells. Having a large fraction of the assemblies' fuel pellets escape the fuel rod cladding, move to different axial zones, and then reconfigure themselves into regularly-spaced stacks is not considered credible. In reality, any pellets that escape the fuel rods (cladding) will end up lying in concentrated piles, at one end of the DFC cavity or along the side of the DFC cavity, that are much less reactive than an optimum pitch array. As it is, removing the fuel rod cladding and leaving the pellets in a regularly spaced, optimum-pitch array is an extremely conservative, non-credible assumption.

The analyses show that the most reactive contents for the DFCs (in the eight corner basket cells) are a regular 15×15 array of (W 15×15 assembly) fuel pellets. The array pitch is such that the edges of the array-side fuel pellets extend just past the DFC walls (resulting in the "shaving" of a small amount of fuel material). There are no empty locations in the array. Different pitch values and arrays with larger or smaller numbers of fuel pellet stacks do not yield higher k_{eff} values.

The k_{eff} results for the criticality analysis of the configurations described above are presented in Table 4-44. The results show that, even with the bounding fissile material (rubble) arrays in the eight basket corner locations, the raw k_{eff} value for the 32P basket is less than that of the MAGNATRAN intact fuel basket, for both the 1.9% enriched unburned fuel case and the 5.0% enriched, 45 GWd/MTU fuel case.

Thus, it is concluded that the 32P basket (with or without damaged assemblies in the eight corner locations) is less reactive than a MAGNATRAN basket fully loaded with intact PWR assemblies. Although the reactivity comparison analysis was performed modeling W 15×15 assemblies (for both the 32P and MAGNATRAN cases), it is concluded that the 32P basket is less reactive than MAGNATRAN for all PWR assembly types, as the assembly configuration should not affect the relative reactivity of the different basket configurations.

Therefore, it is concluded that the burnup curves presented (for each PWR assembly type) in the MAGNATRAN SAR for their fully loaded intact PWR assembly basket are applicable (or conservative) for the 32P basket, with or without damaged fuel in the eight basket edge cells. The mathematical formulas that define the MAGNATRAN "burnup curve" (which gives maximum allowable assembly initial enrichment as a function of assembly burnup) are presented in Table 4-3 of this report. The MAGNATRAN burnup curve for the W 15×15 assembly is also presented graphically in Figure 4-50. None of the MAGNATRAN burnup curves for other PWR assembly types are significantly more restrictive than the W 15×15 assembly curve (with the lowest allowable initial enrichment at 45 GWd/MTU burnup being over 4.96%, vs. 5.0% for W 15×15).

32P – Mixture of Optimum Pitch Cladded Rod Arrays and Fuel Rubble

This configuration is similar to the configuration evaluated in the above section, except that the rod array pitch of the bare assemblies in the center 24 cells of the 32P basket is varied to yield the maximum k_{eff} value. The same contents (as before) are modeled in the DFCs in the eight basket corner cells.

The cladding is not removed from the assemblies in the center 24 basket cells. The guide and instrument tubes of the W 15×15 assembly are still modeled. The only difference in the array is that the pitch is varied. Also, unlike the optimum fuel pellet arrays modeled in the corner cells, the number of fuel rods in the array (204) is retained, and the fuel rods (including their cladding) may not shift out past the cell walls.

This configuration is modeled to represent an unlikely contingency where NRC does not require (initially intact) high burnup fuel to be placed into a damaged fuel can, but the possibility of partial assembly reconfiguration where the fuel rod array pitch may change must be considered.

For this case, a reactivity comparison is only made for the 5.0% enriched, 45 GWd/MTU fuel case. A comparison is not made for 1.9% enriched unburned fuel. The reason for this is that this contingency is only expected to apply for high burnup fuel. NRC's position has been to not question the integrity of low-burnup fuel, under NCT or HAC. Thus, having a change in rod array pitch for low-burnup (< 45 GWd/MTU) is not a contingency that requires evaluation.

The analyses show that maximum reactivity occurs when the (cladded) fuel rods are shifted out as far as possible, within the guide tube interior, so that the rod array pitch is maximized and the fuel rods are in contact with the guide tube walls. The resulting k_{eff} values are shown in Table 4-44.

The Table 4-44 results show that, for W 15×15 assemblies, this configuration is more reactive than the intact (45 GWd/MTU) assembly MAGNATRAN basket configuration, but is slightly less reactive than the MAGNATRAN damaged fuel basket configuration (where four DFCs containing damaged fuel arrays are modeled in the four basket corners). It is assumed if the optimum pitch configuration has similar reactivity to the corresponding MAGNATRAN damaged fuel basket configuration for W 15×15 assemblies; the reactivity will be similar to the corresponding MAGNATRAN damaged fuel basket configuration for other PWR assembly types as well. This will be confirmed by formal licensing analyses. Thus, the more-restrictive burnup curves presented in the MAGNATRAN SAR for their damaged fuel basket would apply to this configuration. This (W 15×15) DFC basket burnup curve is shown (along with the intact assembly basket burnup curve) in Figure 4-50. Figure 4-50 also shows the US spent fuel assembly population (in terms of initial enrichment vs. burnup) for comparison with the two burnup curves.

Figure 4-50 shows that while the MAGNATRAN DFC burnup curve (and thus, the 32P basket configuration evaluated in this section) still accommodates most of the US PWR spent fuel inventory, the fraction of the inventory that falls below the curve (i.e., cannot be loaded) is much larger than it is for the intact assembly MAGNATRAN curve (and for the 32P basket with intact assemblies in the 24 center cells).

If one did have to consider optimum pitch assembly arrays in the basket center cells, the small fraction of the US PWR spent fuel inventory that (as a result) could not be loaded into the center of the 32P basket could be accommodated in a couple of ways. Moderator exclusion could be used to address the potential of assembly array pitch changes occurring under HAC. That would result in the use of the burnup curves that applied for the intact center assembly configuration.

Alternatively, some assemblies could be removed from cells near the basket center, for the minority of shipments that contain the relatively reactive fuel that falls under the MAGNATRAN DFC basket burnup curve (i.e., the highest curve shown in Figure 4-50). An additional analysis was performed that removes the assemblies from the four center cells of the 32P basket. The resulting k_{eff} value is shown in Table 4-44. That k_{eff} value is lower than the value that applies for the intact assembly MAGNATRAN basket. Thus, the lower burnup curve shown in Figure 4-50 (i.e., the function mathematically defined in Table 4-3) could then be used.

Removing four assemblies from the 32P basket in a phalanx (or checkerboard) pattern would reduce k_{eff} more than removing assemblies from the four center locations. However, analyzing such a pattern would require a full basket model, whereas the criticality evaluation was performed using a $1/8^{th}$ pie section model. A full basket model analysis will be performed in a licensing evaluation. It is known from experience that removing two assemblies from the basket center cells will yield most of the reactivity reduction that would come from removing the assemblies from all four center cells. Also, the k_{eff} value (of 0.891) shown in Table 4-44 for the intact MAGNATRAN basket lies about halfway between the k_{eff} values shown for the fully loaded 32P basket (0.910) and the one shown for the case where four assemblies are removed from the basket center (0.868). Thus, the full basket analysis is expected to show that only two assemblies will need to be removed from the 32P basket center in order to match the performance of the intact assembly MAGNATRAN basket (i.e., for the lower burnup curve shown in Figure 4-50 to apply).

In summary, if it is assumed that the pitch could change for bare high burnup assemblies loaded into the 24 center slots of the 32P basket, it will measurably increase the (small) fraction of US PWR fuel that could not be loaded into those 24 center cells of the 32P basket. To accommodate that fuel, moderator exclusion could be invoked or the payload of the 32P basket could be reduced, to 30 assemblies, for a small fraction of shipments.

28P – Mixture of Optimum Pitch Cladded Rod Arrays and Fuel Rubble

The purpose of the 28P basket in general is to address the contingency where all PWR assemblies are placed into DFCs before being loaded into the transport cask. One reason this may be necessary is if NRC requires all high burnup PWR fuel (i.e., the majority of the future US PWR fuel inventory) to be placed into DFCs. The specific analysis discussed in this section evaluates a contingency where initially intact fuel is placed into DFCs, but only undergoes partial reconfiguration under HAC. Specifically, it is assumed that such fuel reconfigures so that the assembly rod array pitch may vary, but the fuel pellets remain sealed inside the (cladded) fuel rods.

The analysis models DFCs in all 28 cells of the 28P basket. DFCs containing initially intact, high burnup PWR fuel may be loaded into any cell of the 28P basket.

In the eight basket corner (periphery) cells, the DFCs are assumed to contain fuel rubble, which is represented by an optimum-pitch fuel pellet array with all cladding materials conservatively removed (i.e., the same optimum fissile material array modeled in the 32P analyses described in the previous sections). The reason for this is that the eight basket edge cells may be loaded with DFCs containing assemblies that are actually damaged (prior to loading). It is conservatively assumed that such damaged assemblies are subject to an arbitrary degree of reconfiguration under HAC.

In the center 20 cells of the 28P basket, the DFCs contain optimum-pitch arrays of cladded (W 15×15 assembly) fuel rods, similar to the basket center cell cladded rod arrays modeled in the 32P analysis discussed in the previous section. As with the 32P basket analysis, the analyses show that reactivity (k_{eff}) is maximized by increasing the pitch of the (W 15×15) assembly array as much as possible, such that the outer fuel rods in the assembly array are in contact with the DFC walls.

The modeled fuel material, in both the optimum pitch cladded rod arrays in the center 20 cells and the optimum pellet (rubble) array in the eight basket corner cells, is the same 45 GWd/MTU, 5.0% initial enrichment fuel material that is modeled in the 32P basket analysis. The same set of 18 fuel isotopic compositions is modeled in 18 axial assembly zones. A case with 1.9% enriched unburned fuel is not modeled for the 28P basket. The reason for this is that the optimum pitch cladded rod arrays, inside DFCs in the 28P basket's 20 center cells, will only occur in the case of high burnup fuel. For intact low burnup assemblies (not in DFCs), the reactivity of the 28P basket will clearly be lower than that of the 32P basket. The 32P basket is, in turn, shown in previous sections to be less reactive than the intact assembly MAGNATRAN basket, for both 5.0% enriched 45 GWd/MTU fuel and unburned, 1.9% enriched fuel.

The results of the criticality analysis are presented in Table 4-44. The k_{eff} value for this analyzed configuration (0.873) is less than the value of 0.891 determined for the intact fuel MAGNATRAN basket, for 5.0% enriched, 45 GWd/MTU fuel. Any low burnup (< 45 GWd/MTU) fuel loaded into this basket configuration would remain intact, resulting in even lower levels of reactivity. Thus, the burnup curve that would be determined (in future licensing evaluations) for this 28P basket configuration would be lower than that which applies for the MAGNATRAN intact assembly basket configuration. The burnup curve calculated (in the MAGNATRAN SAR) for the MAGNATRAN intact assembly basket configuration is the lower of the two burnup curves shown in Figure 4-50. The burnup curve that would apply for this 28P basket configuration would be even lower. Therefore, as shown by Figure 4-50, this configuration would accommodate the overwhelming majority of US PWR spent fuel.

<u>28P – Fuel Rubble in All DFCs</u>

The analysis described in this section is performed to evaluate the contingency where NRC requires the criticality licensing evaluation to assume that initially intact high burnup fuel assemblies that are placed inside DFCs undergo full reconfiguration under HAC. That is, it must be assumed that all the fuel pellets may escape the fuel rods under HAC. As intact high burnup fuel assemblies will constitute the majority of the future US PWR spent fuel inventory, this means that fully reconfigured fuel assemblies (inside DFCs) would have to be modeled in all 28 cells of the 28P basket.

This analysis bounds any potential fuel reconfiguration by modeling an optimum fuel pellet array, with no cladding material present, inside 28 DFCs that are placed into all 28 cells of the 28P basket. This is the same optimum fissile material array that has been modeled in the basket corner locations, in the analyses described in all three previous sections. The fuel isotopic composition of the optimized fuel pellet array corresponds to 5.0% enriched, 45 GWd/MTU fuel, with the same 18-zone axial burnup (and isotopic composition) profile described in previous sections. The analysis is performed for W 15x15 assembly fuel pellets.

The results of this analysis are presented in Table 4-44. The results show that this (extremely conservative) configuration is about as reactive as the W 15×15 MAGNATRAN DFC basket configuration (with a k_{eff} value of 0.910, vs. 0.915 for MAGNATRAN). The burnup curve calculated (in the MAGNATRAN SAR) for the MAGNATRAN DFC basket configuration is the higher of the two burnup curves shown in Figure 4-50 . It is assumed that if the 28P basket configuration is roughly as reactive as the MAGNATRAN DFC basket for a W 15×15 assembly payload, will be roughly as reactive as the corresponding MAGNATRAN DFC basket for the other PWR assembly types as well. (Licensing analyses will have to confirm this.) Thus, the burnup curve that would be determined (in future licensing evaluations) for this 28P basket configuration would be similar to the higher burnup curve shown in Figure 4-50. Although that (higher) burnup curve still accommodates the great majority of the US PWR spent fuel inventory, the number of assemblies that fall under (i.e., do not pass) the burnup curve is significantly higher.

As discussed in the previous section above (for the 32P basket with optimum-pitch rod arrays in the center cells), two alternatives exist for addressing the small fraction of the US PWR spent fuel inventory that could no longer be loaded into the center cells of the 28P basket, if one must assume that such assemblies crumble into rubble under HAC. Moderator exclusion could be invoked, which would eliminate the criticality issue. Alternatively, reduced payloads (where a few basket center cells are left empty) could be used for a small fraction of the shipments.

An alternative ($1/8^{th}$ pie section) criticality model that removes the DFCs (containing fuel rubble) from the center four basket locations yields a k_{eff} value of 0.876, versus 0.910 for the full capacity case (where DFCs containing fuel rubble are present in all 28 cells). To match the k_{eff} value of 0.891 that corresponds to the intact assembly MAGNATRAN basket, about half that amount of k_{eff} reduction is required. It is very likely that such a k_{eff} reduction could be achieved by removing two (vs. four) DFCs from the basket.

Thus, it is concluded that a 28P basket containing 26 loaded DFCs could match the criticality performance of the intact assembly MAGNATRAN basket (which is represented by the lower burnup curve shown in Figure 4-50), even if fuel rubble is very conservatively modeled in all 26 DFCs.

Table 4-44. Summary of PWR Criticality Evaluation Results

Basket/Assembly Configuration	MCNP5 Raw K_{eff}
MAGNATRAN Intact Assembly Basket[1] – 5.0%, 45 GWd/MTU PWR fuel	0.891
MAGNATRAN Intact Assembly Basket[1] – 1.9% Unburned PWR fuel	0.917
MAGNATRAN DFC Basket[1] - 5.0%, 45 GWd/MTU PWR fuel	0.915
32P Basket – Intact Fuel (center cells) and Rubble (in DFCs in corner cells) 5.0%, 45 GWd/MTU Fuel – Full Payload	0.863
32P Basket – Intact Fuel (center cells) and Rubble (in DFCs in corner cells) 1.9%, Unburned Fuel – Full Payload	0.904
32P Basket – Optimum Pitch Cladded Fuel (center cells) and Rubble (in DFCs in corner cells) - 5.0%, 45 GWd/MTU Fuel – Full Payload	0.910
32P Basket – Optimum Pitch Cladded Fuel (center cells) and Rubble (in DFCs in corner cells) - 5.0%, 45 GWd/MTU Fuel – 28 Assembly Payload	0.868
28P Basket[2] - Optimum Pitch Cladded Fuel (center cells) and Rubble (corner cells) - 5.0%, 45 GWd/MTU Fuel – Full Payload	0.873
28P Basket[2] – Rubble (in DFCs) In All Cells 5.0%, 45 GWd/MTU Fuel – Full Payload	0.910
28P Basket[2] – Rubble (in DFCs) In All Cells 5.0%, 45 GWd/MTU Fuel – 24 Assembly Payload	0.876

Notes:

1. Burnup curves which correspond to the intact and DFC MAGNATRAN baskets are shown (in comparison to the US PWR spent fuel inventory) in Figure 4-50. 32P and 28P basket and payload configurations with similar raw k_{eff} values are assumed to yield similar burnup curves.
2. For all 28P basket cases, all basket cells contain DFCs (that contain either partially reconfigured assemblies or rubble).

PWR Criticality Evaluation Conclusions

If the bare fuel assemblies (not in DFCs) in the center 24 cells of the 32P basket are assumed to remain intact under HAC, the burnup curves that would be calculated for each assembly type by a future burnup credit licensing evaluation would be lower (less restrictive) than the curves formulaically described in Table 4-3 (one example of which is illustrated by the lower burnup curve shown in Figure 4-50).

A 28P basket containing a DFC in every basket cell would also produce burnup curves that are less restrictive than those described in Table 4-3 and illustrated by the lower burnup curve in Figure 4-50, if only partial reconfiguration is assumed for the initially intact high burnup fuel assemblies placed into the DFCs in the basket's center 20 cells. Partial reconfiguration can involve a change to the assembly array pitch, but does not include large numbers of fuel pellets escaping the fuel rods.

As shown in Figure 4-50, such a burnup curve would accommodate the overwhelming majority of US PWR spent fuel. Since shutdown plants would have more than enough CRAs to insert into the few assemblies underneath that curve, the 32P and 28P baskets (under the above

assumptions) would be able to accommodate the entire US PWR spent fuel inventory, without the need to reduce payload capacity for any shipments.

If partial reconfiguration (where pellets remain in fuel rods but the rod array pitch changes) is assumed to occur, under HAC, for the bare high burnup assemblies loaded in the center 24 cells of the 32P basket, a burnup curve similar to the upper curve in Figure 4-50 is expected to result. A similar burnup curve is expected to result for the 28P basket if full disintegration of the (initially intact) high burnup assemblies loaded into the DFCs in the center 20 cells of that basket is assumed to occur under HAC.

If the final burnup curves produced by future burnup credit criticality licensing evaluations produce burnup curves similar to the upper curve shown in Figure 4-50, for the 32P and 28P baskets, two things could be done to improve criticality performance and greatly reduce the fraction of the PWR assembly inventory that does not qualify for loading. Removing approximately 2 assemblies/DFCs from the basket center will result in a burnup curve similar to the lower burnup curve shown in Figure 4-50. That would result in the 32P and 28P baskets having capacities of 30 and 26 PWR assemblies, respectively, for a small fraction of shipments. Alternatively, relying on moderator exclusion would eliminate the need for payload capacity reduction.

The fraction of the overall assembly inventory shown in Figure 4-50 that lies between the two presented burnup curves is approximately 5% at most. Thus, only approximately 5% of overall shipments may have require reduced capacity. (CRAs can be used to accommodate the small number of assemblies under the lower burnup curve, as discussed above.) The potentially needed capacity reduction of two assemblies corresponds to payload reduction percentages of approximately 6% and 7%, for the 32P and 28P baskets, respectively. Thus, the overall level of potential capacity reduction, over an entire shipping campaign, would be less than 0.5%. Thus, measures to reduce or eliminate the need for capacity reduction (discussed above) may not be necessary or worthwhile.

The P32 configuration where the bare assemblies loaded in the center cells are assumed to remain intact, and the 28P configuration where only partial reconfiguration is assumed for the (high burnup) assemblies loaded into the DFCs in the basket center cells, are considered the primary evaluated configurations (as the contingencies which lead to the more conservative configurations are deemed to be very unlikely). Thus, the corresponding (lower) burnup curves are the ones used as the basis of the fuel loading specifications presented in Section 4.2.4. Those burnup curves are described formulaically in Table 4-3.

4.3.4.2 BWR Criticality Evaluation

There is no licensing precedent for using burnup credit criticality analyses to license BWR assembly payloads. For many reasons, burnup credit criticality analyses would be much more difficult for BWR fuel. Also, due to the smaller size of BWR assemblies, they can be qualified for loading in a non-flux-trap basket, without crediting burnup. This removes most of the need for burnup credit analyses. Thus, it is assumed that any future licensing evaluation for the 68B or 61B baskets would not involve burnup credit.

Since unburned fuel criticality analysis is much simpler than burnup credit analysis, such analyses can be performed in support of this DOE report. Thus, instead of performing analyses which estimate the reactivity of the 68B and 61B baskets relative to that of an existing system (as was done for PWR fuel), analyses can be performed which directly calculate absolute k_{eff} values. The results of these analyses are maximum allowable BWR assembly initial U-235 enrichment values, for the basket configurations that are evaluated.

One thing that is not done in this report is an extensive criticality code benchmarking evaluation that determines the code bias and uncertainty penalties that must be applied to raw, calculated k_{eff} values. Instead, a maximum allowable raw k_{eff} value of 0.9376 is taken from the SAR for the MAGNATRAN cask system, for which licensing criticality analyses (for BWR fuel) have been performed. These evaluations use the same criticality code (MCNP5) that was used in the MAGNATRAN licensing evaluations, so the same code bias and uncertainty penalties should apply.

As discussed in Section 4.1.2, the (borated aluminum) neutron absorber plates are 0.375 inches thick in both the 68B and 61B baskets. For all cases, the B-10 density in the borated aluminum material is modeled at 0.1125 g/cc. This is based upon an actual B-10 concentration of 0.125 g/cc that has been reduced by 10% to account for variations in B-10 concentration within the plates (as is required by NRC). It is assumed that borated aluminum plates with a B-10 concentration of 0.125 g/cc will be available, as that is the concentration in the borated aluminum neutron absorber sheets used in the (commercially available) MAGNATRAN basket.

All 68B basket analyses model bare BWR fuel assemblies (not in DFCs) in the 52 basket center locations, and damaged fuel, in DFCs, in 16 basket edge (corner) locations. The final 68B basket configuration, described in Section 4.1.1 and illustrated in **Figure 4-6**, has eight DFCs around the basket periphery. These criticality evaluations, which model 16 DFCs containing bounding fissile material arrays, are conservative for the actual basket and payload configuration). Intact BWR assemblies are modeled with flow channels (which have 0.12 inch thick Zircaloy walls), since existing licensing evaluations show that the presence of channels increases assembly reactivity. Only the larger, basket periphery DFC cells of the 68B basket are large enough to accommodate damaged fuel cans. All 61B analyses model partially or fully reconfigured (damaged) fuel in all 61 basket locations. Bare, intact BWR fuel can be loaded into any 61B basket location, but those assembly configurations are clearly bounded by (i.e., less reactive than) the reconfigured assembly configurations that are analyzed, so they need not be evaluated.

For the 68B and 61B baskets, several different configurations have been modeled, which reflect various licensing contingencies. The evaluations of these alternative cases allow the impacts of various licensing contingencies (concerning how high burnup and/or damaged fuel are treated, for example) will affect system performance. These specific evaluations are described in the sections below.

<u>68B – Mixture of Intact Assemblies and Fuel Rubble</u>

This configuration evaluates what is considered to be the most likely contingency where the 68B basket is used. It models intact BWR fuel assemblies in the center 52 basket locations, and models optimum-pitch pellet arrays inside DFCs in 16 basket edge cells.

Evaluations are performed on two representative BWR assembly types, an 8×8 assembly (that features relatively large fuel rods) and a 10×10 assembly that features small fuel rods. These two assembly types are also among the most reactive BWR assembly types (as shown in Table 6.1.2-4 of the MAGNATRAN SAR). It is assumed that similar criticality results (i.e., maximum allowable initial enrichment levels) will be produced by other BWR assembly types.

This evaluation models fuel rubble, inside DFCs, in sixteen 68B basket edge (corner) cells because if the 68B basket is used, it will have to have some cells available for DFCs containing damaged fuel. Regardless of how (initially intact) high burnup fuel is treated, some small fraction of the fuel inventory will be actually damaged, prior to loading. All such fuel will have to be loaded into DFCs, and some fuel will be potentially subject to an arbitrary degree of reconfiguration under HAC.

To bound these potential reconfigured assembly configurations, an optimum-pitch fuel pellet array that completely fills the DFC interior is modeled. The rod cladding and assembly flow channel are conservatively removed. The pellet array pitch is adjusted until maximum reactivity (k_{eff}) is produced; regardless of whether the pitch corresponds to more or less fuel material than is actually in the assembly. This represents the most reactive possible configuration of the fuel material, and bounds any potential assembly configuration. Optimum array pitch evaluations are performed for both large and small diameter BWR fuel pellets. For small diameter (10×10 assembly) pellets, the scoping analyses found that maximum reactivity occurs for an 11×11 array where the fuel pellet stacks moved apart as much as possible, so that the array edge pellets are in contact with the DFC walls. (Thus, maximum reactivity occurred for an array that has a larger amount of fuel than the intact assembly array.) Similar reactivity was seen for the most reactive large diameter (8×8 assembly) pellet arrays.

The k_{eff} results for the criticality analysis of the configurations described above are presented in Table 4-45. The results show that for an initial U-235 enrichment of 5.0% (and no burnup), theraw k_{eff} values for the 68B basket are 0.858 and 0.822 for 8×8 and 10×10 BWR assemblies, respectively. This is conservatively assuming the bounding fissile material (rubble) arrays in the 16 basket corner locations. Both of the above k_{eff} values are well below the allowable raw k_{eff} value of 0.9376. Thus, it is concluded that the 68B basket can handle all US BWR assembly types, with initial enrichment levels up to 5.0%, with a substantial criticality margin. The 68B basket can also handle BWR assemblies, with any degree of damage, and also with an initial enrichment of up to 5.0%, inside DFCs loaded into the 16 basket periphery slots illustrated in **Figure 4-6**.

<u>68B – Mixture of Optimum Pitch Cladded Rod Arrays and Fuel Rubble</u>

This analysis is similar to the one described in the section above, the only difference being that the array pitch of the intact BWR assemblies in the center 52 basket cells is varied so that the maximum k_{eff} value is achieved. The evaluation is performed to evaluate the impact of assuming partial reconfiguration of initially intact, high burnup BWR fuel that is placed in the center 52 cells of the 68B basket. For the partial reconfiguration, it is assumed that the array pitch may change, but that the fuel pellets remain confined inside the fuel rods.

This evaluation is performed for the 8x8 assembly, since it was shown, in the section above, to be more reactive. While the pitch is varied, the number of fuel rods (62, with two empty array locations) is preserved. The flow channel is removed. The same optimum fuel pellet array (discussed in the section above) is modeled in the DFCs in the 16 basket periphery cells.

Scoping analyses show that maximum reactivity is achieved by shifting the fuel rods outward as much as possible, so that the rod array completely fills the basket guide tube, and the cladding of the outer rods is in contact with the guide tube walls. Thus, the array pitch is increased as much as possible.

The k_{eff} result for the criticality analysis of this configuration is presented in Table 4-45. The results show that an acceptable k_{eff} value of 0.937 is achieved at an assembly initial enrichment level of 4.4%. Similar or lower allowable initial enrichment levels are expected for other BWR assembly types.

An additional criticality evaluation, whose result is also presented in Table 4-45, shows that if two assemblies are removed from 68B basket center cells, BWR assemblies with an initial enrichment up to 4.85% can be loaded. The resulting k_{eff} value is 0.937. (Unlike the PWR basket evaluation, a full basket model was developed for the BWR baskets, allowing the removal of two assemblies to be directly analyzed.) Finally, a third evaluation was performed which analyzes a 64-assembly configuration, where four assemblies have been removed from the 68B basket. The results of that evaluation (presented in Table 4-45) show that a payload enrichment of 5.0% yields a k_{eff} value of 0.932.

Thus, the impact of conservatively assuming that partial reconfiguration is possible (under HAC) for the initially intact, high burnup BWR assemblies loaded into the center 52 cells of the 68B basket is that the payload capacity of the 68B basket may have to be reduced to 66 for BWR assemblies with initial enrichment levels between 4.4% and 4.85%, and reduced to 64 for BWR assemblies with initial enrichment levels between 4.85% and 5.0%.

<u>61B – Mixture of Optimum Pitch Cladded Rod Arrays and Fuel Rubble</u>

The purpose of the 61B basket in general is to address the contingency where all BWR assemblies are placed into DFCs before being loaded into the transport cask. One reason this may be necessary is if NRC requires all high burnup BWR fuel (i.e., a large fraction of the future US BWR fuel inventory) to be placed into DFCs. The specific analysis discussed in this section evaluates a contingency where initially intact high burnup fuel must be placed into DFCs, but can be assumed to only undergo partial reconfiguration under HAC. Specifically, it is assumed that such fuel reconfigures so that the assembly rod array pitch may vary, but the fuel pellets remain sealed inside the (cladded) fuel rods.

The analysis models DFCs in all 61 cells of the 61B basket. DFCs containing initially intact, high burnup BWR fuel may be loaded into any cell of the 61B basket.

In the 12 basket corner cells (illustrated in Figure 4-7), the DFCs are assumed to contain fuel rubble, which is represented by an optimum-pitch fuel pellet array with all cladding materials conservatively removed (i.e., the same optimum fissile material array modeled in the 68B analyses described in the previous sections). The reason for this is that the 12 basket edge cells

may be loaded with DFCs containing assemblies that are actually damaged (prior to loading). It is conservatively assumed that such damaged assemblies are subject to an arbitrary degree of reconfiguration under HAC.

In the center 49 cells of the 61B basket, the DFCs contain optimum-pitch arrays of cladded fuel rods, similar to the basket center cell (8x8) cladded rod arrays modeled in the 68B analysis discussed in the previous section. As with the 68B basket analysis, the analyses show that reactivity (k_{eff}) is maximized by increasing the pitch of the assembly array as much as possible, such that the outer fuel rods in the assembly array are in contact with the DFC walls.

The k_{eff} result for this analysis is presented in Table 4-45. The results show that an acceptable raw k_{eff} value of 0.934 is attained at a BWR assembly initial enrichment level of 4.4%. If the one, center cell of the 61B basket is left empty (i.e., if a single DFC is removed), the basket yields an acceptable k_{eff} value of 0.936 for a BWR assembly initial enrichment value of 4.8%. Removing two assemblies from the 61B basket allows loading of 5.0% enriched BWR fuel, with a calculated k_{eff} value of 0.934.

61B – Fuel Rubble in All DFCs

The analysis described in this section is performed to evaluate the contingency where NRC requires the criticality licensing evaluation to assume that initially intact high burnup BWR fuel assemblies that are placed inside DFCs undergo full reconfiguration under HAC. That is, that such assemblies must be assumed to disintegrate completely under HAC, and that all the fuel pellets may escape the fuel rods. As intact high burnup fuel assemblies will constitute a large fraction of the future US BWR spent fuel inventory, this means that fully disintegrated fuel assemblies (inside DFCs) would have to be modeled in all 61 cells of the 61B basket.

This analysis bounds any potential fuel reconfiguration by modeling an optimum fuel pellet array, with no cladding material or flow channel present, inside 61 DFCs that are placed into all 61 cells of the 61B basket. This is the same optimum fissile material array that has been modeled in the basket corner locations, in the analyses described in all three previous sections.

The results of these analyses are presented in Table 4-45. The results show that, under these extremely conservative assembly configuration assumptions, a fully loaded 61B basket yields an acceptable k_{eff} value of 0.934 at a BWR assembly initial enrichment level of 3.6%. Thus, a significant fraction of the future BWR spent fuel inventory would not qualify for shipment.

Additional analyses are performed which evaluate 61B baskets with payload of 60, 57, 56 and 52 BWR assemblies (i.e., 61B baskets with one, four, five, and nine cells left empty). The evaluations yield acceptable k_{eff} values (of 0.937 or lower) at BWR assembly initial enrichment levels of 3.9%, 4.3%, 4.6%, and 5.0% for 61B basket payloads of 60, 57, 56, and 52, respectively. The k_{eff} results for these three analyses are also presented in Table 4-45.

BWR Criticality Evaluation Conclusions

The criticality results, presented in Table 4-45, show that a 68B basket containing intact BWR fuel assemblies in the center 52 cells and fuel rubble (i.e., fully reconfigured assemblies) in the 16 basket edge cells can accommodate assembly initial enrichment levels up to 5.0%, regardless

of assembly burnup. Thus, the entire US spent BWR assembly inventory can be loaded. No reductions in payload capacity would be required for any shipments.

The Table 4-45 results show that, if it were assumed that initially intact high burnup BWR assemblies, placed in the center 52 cells of the 68B basket (not in DFCs), could partially reconfigure (where the fuel pellets remain inside the fuel rods but the rod array pitch could change), the 68B basket could accommodate BWR assembly initial enrichments up to 4.4% (with no burnup required). BWR assemblies with initial enrichment levels between 4.4% and 4.85% could be accommodated by reducing the capacity of the 68B basket from 68 to 66. BWR assemblies with initial enrichment levels between 4.85% and 5.0% could be accommodated by reducing the capacity of the 68B basket to 64. Thus, a small fraction of the shipments would have a slightly reduced capacity. The percentages of the BWR spent fuel inventory, at the time of shipment, that have initial enrichment levels above 4.4% and 4.85% are not known. If it were assumed that 25% of the inventory was between 4.4% and 4.85%, and that 5% of the inventory was above 4.85%, the reduction in average shipment capacity would be approximately 1%.

It's possible that a "zone loaded" or "checkerboard" basket payload configuration could be licensed that would eliminate the need for any payload reductions. Such an approach would have some licensing risk, however, due to NRC concern over potential misloading of fuel.

The Table 4-45 results show that if the fuel inside DFCs in the center 49 locations of the 61B basket is assumed to only partially reconfigure under HAC (where the pellets remain inside the fuel rods by the array pitch may vary), the 61B basket can accommodate BWR fuel with initial enrichments up to 4.4%. Reducing the 61B basket payload to 60 assemblies/DFCs allows shipment of BWR assemblies with initial enrichments up to 4.8%. Reducing the capacity to 59 assemblies allows shipment of 5.0% enriched BWR fuel

The Table 4-45 results show that if fuel rubble (i.e., a fully reconfigured assembly) is assumed in all 61 DFCs in the 61 cells of the 61B basket, maximum allowable BWR assembly initial enrichment levels are 3.6%, 3.9%, 4.3%, 4.6% and 5.0%, for 61B basket payload capacities of 61, 60, 57, 56, and 52, respectively. Thus, such a conservative assumption will reduce basket payload capacities for a significant fraction of the US BWR spent fuel inventory.

This could have a measurable impact on the overall average basket capacity over all shipments (i.e., it could measurably impact the overall number of shipments required). The percentages of the BWR spent fuel inventory, at the time of shipment, that have the various initial enrichment levels discussed above are not known. At the time of shipment, most of the BWR fuel inventory may have initial enrichment levels over 4.0% If it were assumed that only 25% of the inventory was lower than 3.9%, 65% of the inventory is between 3.9% and 4.6%, and 10% is above 4.6%, the reduction in average shipment capacity would be approximately 10%. While the exact distribution of enrichments is unknown, the level of payload reduction is likely to be close to the approximately 10% value. Most of the inventory is likely to have enrichments between 4.0% and 4.6%, which results in a capacity reduction from 61 to 56 or 57 (i.e., a reduction of almost 10%). Relatively few assemblies will be able to be shipped at capacities of 60 or 61. Those assemblies will roughly offset the low percentage of assemblies that can only be shipped with a capacity of 52.

Thus, in the specific case where full reconfiguration of all assemblies in the 61B basket is assumed, it may be desirable to pursue options that reduce or eliminate the need for capacity reduction. Such options include the use of moderator exclusion, or licensing "zone loaded" or "checkerboard" payload configurations.

Table 4-45. Summary of BWR Criticality Evaluation Results

Basket/Assembly Configuration	**MCNP5 Raw K_{eff}[1]**
68B Basket – Intact 8×8 BWR Fuel (center cells) and 8×8 Pellet Rubble (in DFCs in corner cells) - 5.0% Initial Enrichment – Full Payload	0.858
68B Basket – Intact 10×10 BWR Fuel (center cells) and 10×10 Pellet Rubble (in DFCs in corner cells) - 5.0% Initial Enrichment – Full Payload	0.822
68B Basket – Optimum Pitch Cladded 8×8 Fuel (center cells) and Rubble (in DFCs in corner cells) – 4.4% Initial Enrichment – Full Payload	0.937
68B Basket – Optimum Pitch Cladded 8×8 Fuel (center cells) and Rubble (in DFCs in corner cells) – 4.85% Initial Enrichment – 66 Assembly Payload	0.937
68B Basket – Optimum Pitch Cladded 8×8 Fuel (center cells) and Rubble (in DFCs in corner cells) – 5.0% Initial Enrichment – 64 Assembly Payload	0.932
61B Basket[2] – Optimum Pitch Cladded Fuel (center cells) and Rubble (in corner cells) – 4.4% Initial Enrichment – Full Payload	0.934
61B Basket[2] – Optimum Pitch Cladded Fuel (center cells) and Rubble (in corner cells) – 4.8% Initial Enrichment – 60 Assembly Payload	0.936
61B Basket[2] – Optimum Pitch Cladded Fuel (center cells) and Rubble (in corner cells) – 5.0% Initial Enrichment – 59 Assembly Payload	0.934
61B Basket[2] – Rubble In All Cells - 3.6% Initial Enrichment – Full Payload	0.934
61B Basket[2] – Rubble In All Cells - 3.9% Initial Enrichment 60 Assembly Payload	0.935
61B Basket[2] – Rubble In All Cells - 4.3% Initial Enrichment 57 Assembly Payload	0.934
61B Basket[2] – Rubble In All Cells - 4.6% Initial Enrichment 56 Assembly Payload	0.936
61B Basket[2] – Rubble In All Cells - 5.0% Initial Enrichment 52 Assembly Payload	0.929

Notes:

1. Existing cask system licensing evaluations[15] show that the maximum allowable MCNP5 raw k_{eff} value for unburned BWR fuel criticality analysis is ~0.9376.
2. For all 61B basket cases, all basket cells contain DFCs (that contain either partially reconfigured assemblies or rubble).

[15] MAGNATRAN Transport Cask SAR, Revision 12A, October 2012, NRC Docket No. 71-9356, NAC International.

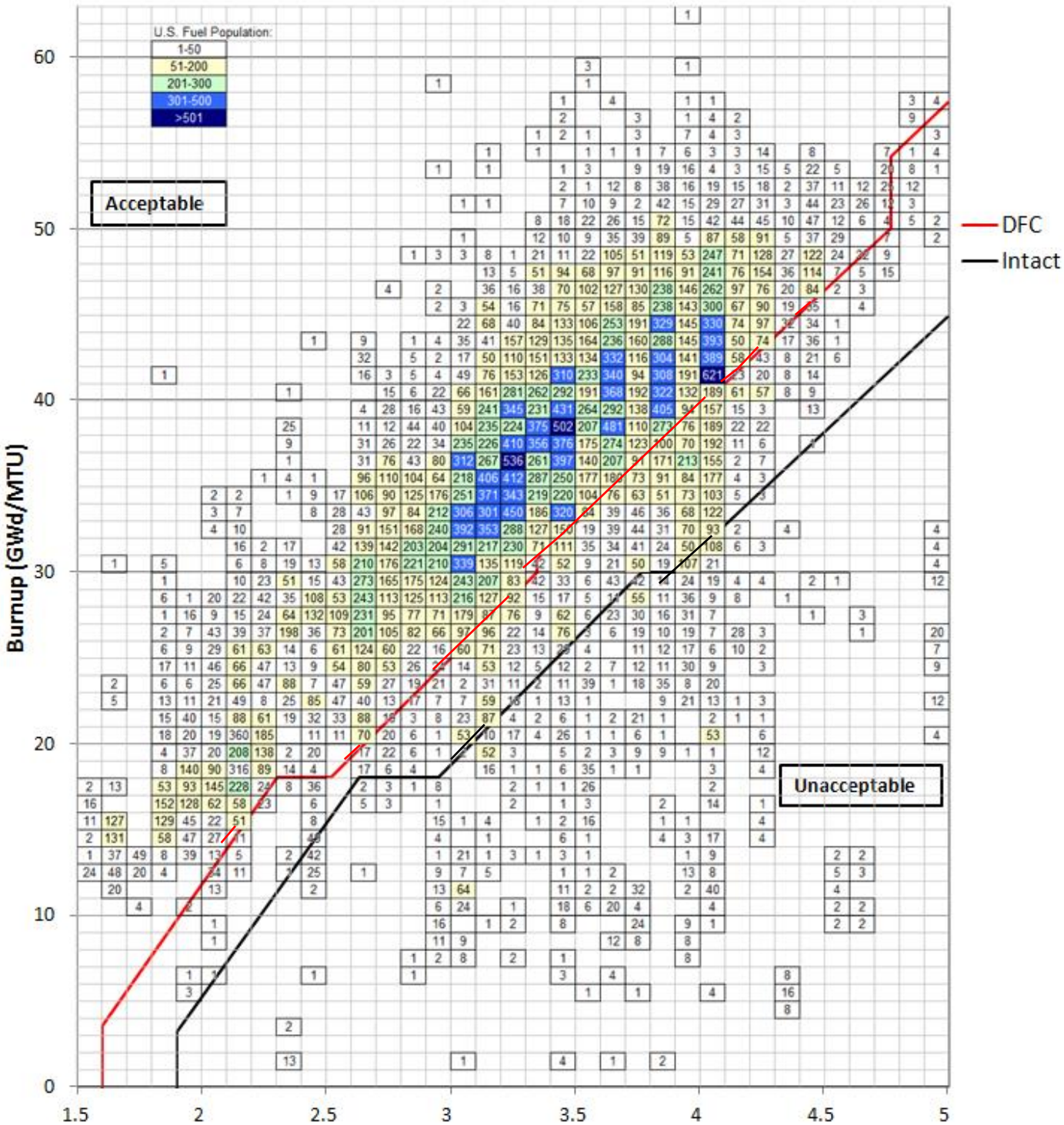

Figure 4-50. MAGNATRAN Intact Fuel and DFC Burnup Curves vs. US PWR Fuel Inventory

4.3.5 **Containment Philosophy**

The transportation cask containment boundary is designed and analyzed to ensure the containment of the cask contents in accordance with 10 CFR 71 (71.43 and 71.51). The containment boundary is tested to ANSI N14.5-1997 leaktight criteria and is designed, fabricated and inspected in accordance with ASME Code, Section III, Subsection NB, with the exception of code stamping. The cask is designed to facilitate leakage testing of the containment boundary penetrations (i.e., lid and port covers) prior to transport to confirm adequacy.

4.3.5.1 Description of the Containment Boundary

The transportation cask containment boundary is defined by the following components: containment vessel, consisting of a bottom forging, inner shell and top forging, and containment penetrations, consisting of a closure lid and port cover-plates. Containment penetrations use dual O-ring seals to establish a confirmable containment boundary. Closure lid and port cover inner O-rings are non-metallic and provide a leak-tight boundary per ANSI N14.5. There is a second set of outer O-rings used to establish a volume between the seals for leak testing of these containment boundary penetrations.

There are only two possible paths for the escape of radioactive material from the transportation cask containment during transport operation. These paths are past the inner O-ring seal on the closure lid or past the inner O-ring seals on the lid port cover-plates.

Both the transportation cask closure lid and port cover seal integrity is verified through leakage testing prior to all loaded transport operations to verify that containment leakage does not exceed the leak-tight criteria of 1×10^{-7} ref·cm^3/sec, per ANSI N14.5, which meets the requirements of 10 CFR 71.43 and 10 CFR 71.51.

4.3.5.1.1 *Containment Vessel*

The transportation cask containment vessel is a shop weldment (consisting of an inner shell; the bottom inner forging and the top forging), and implements the cask lid and port cover-plates to form the containment boundary. The containment vessel components are fabricated from Type 304 stainless steel. All of the materials are in accordance with the applicable requirements of the ASME Boiler and Pressure Vessel Code.

Circumferential and longitudinal welds are used to fabricate the cask inner shell and to attach it to the top and bottom forgings. The longitudinal welds, if required, in adjacent cylindrical sections are staggered 90° or 180° circumferentially. Containment vessel welds (see Table 4-46) are full-penetration bevel or groove welds to ensure structural integrity. Upon completion of the inner shell welds, the welds are examined by liquid penetrant and radiographic examination methods. The results of the examinations are evaluated and accepted in accordance with acceptance criteria of the ASME Code Section III, NB-5350 and NB-5320, respectively.

Upon completion of containment vessel fabrication, the cask containment boundary is hydrostatically tested in accordance with ASME Code requirements to ensure the integrity of the welds and containment components. Following fabrication, the containment boundary of each cask is leakage tested in accordance with ANSI N14.5. The post-fabrication leakage rate test is

to leak-tight criteria of 1×10^{-7} ref·cm^3/sec, per ANSI N14.5-1997. Test equipment and methods are selected to ensure a minimum test sensitivity of one-half the reference leak rate, or 5×10^{-8} ref·cm^3/sec. The equivalent allowable helium leak rate at reference conditions is 2 × 10-7 cm^3/sec (helium), with a minimum helium leak test sensitivity of 1×10^{-7} cm^3/sec (helium).

Table 4-46. Code Requirements for Containment Welds

Weld Location	Weld Type	ASME Code Category (Section III, Subsection NB)
Inner shell longitudinal	Full penetration groove (shop weld)	A
Inner shell circumferential (if used)	Full penetration groove (shop weld)	A
Inner shell to bottom forging	Full penetration groove (shop weld)	A
Inner shell to upper forging	Full penetration groove (shop weld)	A

4.3.5.1.2 *Containment Penetrations*

The transportation cask closure lid is manufactured of 17-4PH stainless steel, plate or forging, and is fully machined prior to being leak tested to ensure penetrations and other machined features do not expose any potential laminar flaws. The post-fabrication closure lid leakage rate test is to leak-tight criteria of 1×10^{-7} ref·cm^3/sec, per ANSI N14.5-1997. Test equipment and methods are selected to ensure a minimum test sensitivity of one-half the reference leak rate, or 5×10^{-8} ref·cm^3/sec. The equivalent allowable helium leak rate at reference conditions is 2×10^{-7} cm^3/sec (helium), with a minimum helium leak test sensitivity of 1×10^{-7} cm^3/sec (helium).

The penetrations in the transportation cask containment boundary are the closure lid ports and the closure lid opening in the cask body. As noted above, these penetrations are designed with seals capable of establishing the required containment boundary and to ensure leak-tight performance is maintained through both Normal Operations and Hypothetical Accident Conditions. The quick-disconnect valves installed in the lid ports are not considered part of the containment boundary and are provided for use during loading and unloading operations only.

The transportation cask closure assembly for the transportation cask consists of the lid, bolts and O-rings. The lid is recessed and bolted into the top forging of the cask body. The lid is secured by 42 12-point flanged head bolts fabricated from a nickel alloy steel bolting material. The initial torque for installation of the lid bolts is specified in Section 5, Concept of Operations (Table 5-1). The bottom surface of the lid is sealed to the top forging of the cask body by a set of two concentric O-rings, with the inner O-ring forming the containment boundary. The outer O-ring provides a sealed annulus for leakage testing the inner O-ring seal.

Containment access ports can be recessed into the lid or into the upper forging. The port cover-plates are secured by socket head cap screws fabricated from GR B6, Type 410 stainless steel. Similar to the lid configuration, the port coverplates are sealed by a set of two O-rings, with the

inner O-ring forming the containment boundary. The outer O-ring provides a sealed annulus to leakage test the inner O-ring seal.

All O-ring seals in the transportation cask are specified as EPDM. Use of EPDM O-rings allows for testing of the closure lid and port access containment boundaries, for leak-tight performance during annual transportation cask testing, described in Section 6, Equipment Maintenance Requirements, and requires site performance of a functional 10-3 leak test, described in the Operations Section, during fuel loading operations. Elimination of the helium leak test during fuel loading reduces site operations dose exposure and simplifies loading operations.

4.3.5.2 Containment Under Normal Conditions Of Transport (Type B Packages)

The transportation cask must maintain a radioactivity release rate of not more than 10^{-6} A2/hr under NCT, as required by 10 CFR 71.51. Maintaining leak-tight containment, per ANSI N14.5-1997, satisfies this condition. ANSI N14.5-1997 specifies and defines a reference (air at standard conditions) leakage rate of 1×10^{-7} ref·cm^3/sec, or 2×10^{-7} cm^3/sec helium at the reference conditions as leak-tight. Structural and thermal evaluations of the transportation cask are performed providing the basis for demonstrating that the transportation cask containment is maintained during NCT.

4.3.5.3 Containment Under Hypothetical Accident Conditions (Type B Packages)

The transportation cask must maintain a radioactivity release rate of not more than 10 A2/week 85Kr or 1 A2/week for other radioactive material under hypothetical accident conditions of transport, as required by 10 CFR 71.51. Maintaining leak-tight containment, per ANSI N14.5-1997, satisfies this condition. ANSI N14.5-1997 defines a reference leakage rate of 1×10^{-7} ref·cm^3/sec (air at standard conditions), or 2×10^{-7} cm^3/sec (helium) at the reference conditions as leak-tight. Structural and thermal evaluations of the transportation cask are performed providing the basis for demonstrating that the transportation cask containment is maintained during hypothetical accident conditions of transport.

4.3.5.4 Fission Gas Products

For accident conditions the maximum fission gas release is assumed to be 100% rod failure and 30% of the radioactive fission gases, primarily 85Kr, tritium and 129I. This gas volume is available for release to the transportation cask cavity. Also potentially released, but not contributing to the transportation cask pressure, is crud on the fuel assemblies and a fraction of the fuel volatile and fine inventory. As a leak-tight containment boundary is applied to the transportation cask, release fractions for nongaseous materials are not required to demonstrate regulatory compliance. Pressure evaluations under hypothetical accident conditions, including fission gas effects, should be performed.

4.3.5.5 Containment of Radioactive Materials

The transportation cask is designed to maintain a release rate of less than 1 A2/week for the hypothetical accident conditions, as required by 10 CFR 71.51. This is achieved by maintaining a leak-tight boundary throughout all hypothetical accident conditions.

4.3.5.6 Containment Criteria

Maximum allowable leak rates for the transportation cask containment system fabrication and periodic verification leak test calculations and test acceptance criteria are based on leak-tight criteria per ANSI N14.5-1997.

4.3.5.7 Leakage Rate Tests For Type B Packages

The air standard leakage rate established for the transportation cask containment boundary is 1×10^{-7} ref cm^3/ sec, i.e., 2×10^{-7} cm^3/sec (helium), which is the leak-tight condition as defined by ANSI N14.5-1997. Leakage testing of the transportation cask is performed using helium gas.

4.3.5.8 Transportation Cask Leakage Tests

The transportation cask leakage tests are performed using a reference condition leak rate of 2×10^{-7} cm^3/sec (helium), with a minimum detection sensitivity of 1×10^{-7} cm^3/sec (helium). Reference conditions imply a leak from a volume at 1 atm absolute pressure into a volume at a pressure of 0.01 (or less) atm absolute. Table 4-47, contains a summary of the leakage rate limits for the transportation cask containment.

Table 4-47. Containment Boundary Leakage Rate Limits

Parameter	**Allowable Reference Leak Rate**	**Allowable Helium Leak Rate**	**Minimum Test Sensitivity (Helium)**
Fabrications Leakage Rate Test	1×10^{-7} cm^3/sec	2×10^{-7} cm^3/sec	1×10^{-7} cm^3/sec
Preshipment Leakage Rate Test	N/A	N/A	1×10^{-3} cm^3/sec (Air)
Maintenance Leakage Rate Test	1×10^{-7} cm^3/sec	2×10^{-7} cm^3/sec	1×10^{-7} cm^3/sec
Periodic Leakage Rate Test	1×10^{-7} cm^3/sec	2×10^{-7} cm^3/sec	1×10^{-7} cm^3/sec
Empty Transport	N/A	N/A	N/A

4.3.5.9 Fabrication Leakage Rate Test

When fabrication is complete, leakage tests will be performed on the cask containment boundary as described in Section 8.1.4. The leakage tests will verify that the detectable leak rate of the assembled containment boundary does not exceed the reference air leak rate of 1×10^{-7} ref·cm^3/sec, i.e., 2×10^{-7} cm^3/sec (helium).

4.3.5.10 Maintenance Leakage Rate Test

A maintenance leakage rate test is performed on the transportation cask package containment boundary seals and components whenever a containment component is replaced. The containment component is leakage tested following replacement according to the requirements of the fabrication leakage rate rest. The maintenance leakage rate test verifies that the replacement component has been properly installed and that the maintenance leakage rate test meets the leaktight criteria.

4.3.5.11 Preshipment Leakage Rate Test

As specified in the loading procedure, a containment preshipment leakage rate test is performed on each containment closure prior to each loaded transport.

a) For the EPDM O-rings, the preshipment leakage rate test will be performed to confirm no detected leakage to a test sensitivity of 1×10^{-3} ref cm^3/sec by pressurizing the O-ring annulus to 15 (+2, -0) psig and isolating for a minimum of 15 minutes. There must be no loss in pressure during the test period.
b) For EPDM O-rings that have been field installed due to damage or failed leakage testing (a), a leak detector connected to the inter-seal test port will be used to verify no leakage greater than 2×10^{-7} cm^3/sec (helium) at a minimum sensitivity of 1×10^{-7} cm^3/sec (helium) at standard conditions.
c) No leakage rate testing is required for an empty transportation cask.

4.3.5.12 Periodic Leakage Rate Test

Periodic leakage rate testing will be performed on all containment boundary closures and O-ring seals. The purpose of the testing is to confirm that the containment capabilities of the packaging have not deteriorated during a period of nonuse. The periodic leakage rate testing will be performed within 12 months prior to each shipment, except such testing need not be performed for out-of-service casks.

For containment components replaced and tested during each loaded transport (i.e., lid inner O-ring and lid port coverplate inner O-ring), periodic testing is not required.

The acceptance criteria for the containment periodic leakage rate test is that there is no leakage greater than 2×10^{-7} cm^3/sec (helium) at a minimum sensitivity of 1×10^{-7} cm^3/sec (helium) at standard conditions.

5 CONCEPT OF OPERATIONS

5.1 GENERAL TRANSPORTATION CASK OPERATING PROCEDURES

The following provides an outline of the operating procedures and tests that are performed to ensure proper function of the transportation cask during transport operations. The operating procedures are written for direct loading or unloading of fuel in a spent fuel pool and present the minimum generic requirements for loading, unloading, preparation for transport, and for inspection and testing of the transportation cask. Each cask user will need to develop, prepare and approve site specific procedures to assure that cask handling and shipping activities are performed in accordance with the package's CoC and any applicable Nuclear Regulatory Commission and Department of Transportation regulations governing the packaging and transport of radioactive materials.

Operators of the package are responsible for verifying fuel accounting, i.e. historical data, and inspection records, such that the fuel assemblies loaded are in compliance with the transportation

cask CoC. In addition to confirming that the loading of the package is in compliance with applicable requirements, the licensee/operator is also responsible for satisfying the routine determinations listed in 10 CFR 71.87 (a) – (k) prior to use.

All operations should be performed by trained personnel using the appropriate tools with all calibrations/validations performed and recorded.

5.1.1 Transportation Cask General Torque Table

Table 5-1. General Torque Table

Component	Number Used	Fastener[1]	Torque Value[2]
Lifting Trunnion bolts	18	1 1/8" - 8 UN-2A Socket Head Cap Screw	120 ± 20 ft-lb (165 ± 28 N-m)
Lid Bolts	42	1 ½ - 8 UN-2A 12 Point Flange Bolt	2,200 ± 200 ft-lb (3,000 ± 275 N-m)
Port Cover Bolt	6	⅜ - 16 UNC Socket Head Cap Screw	140 ± 10 in-lb (16 ± 1 N-m)
Impact Limiter Retaining Bolts	24	1-8 UN-2A Socket Head Cap Screw	Est @ 375 ± 25 ft-lb (510 ± 34 N-m)
Fuel Spacer Bolts	6	1-8 UN-2A Socket Head Cap Screw	Est @ 375 ± 25 ft-lb (510 ± 34 N-m)

Notes:

1. All threaded fasteners shall be lightly lubricated using Nuclear Grade Pure Nickel NEVER-SEEZ® or equivalent.
2. Bolt sizes and quantities are not fully designed and analyzed.

5.1.2 Procedures for Empty Cask Receipt, Loading and Preparation for Transport

The following receipt and loading procedures are based on industry standard practices for loading spent fuel. Receiving inspections will require performance of radiation and removable contamination surveys of the empty cask and vehicle in accordance with 10 CFR 71 and 49 CFR 173.

5.1.2.1 Receiving Inspection – Empty Cask

1. Perform radiation and removable contamination surveys in accordance with 49 CFR 173.441 and 173.443 requirements.

2. Move the transport vehicle with the transportation cask to the cask receiving area.

3. Secure the transport vehicle. Remove personnel barrier hold down bolts from the personnel barrier, remove the personnel barrier and store in a designated area.

4. Visually inspect the transportation cask while secured to the transport vehicle in the horizontal orientation for any signs of damage.

5. Remove tamper indication devices.

6. Attach slings to the upper impact limiter lifting points and remove impact attachment hardware.

7. Remove the upper impact limiter and store upright.

8. Repeat operation for the bottom impact limiter.

9. Attach a sling to the cask front tiedown assembly lifting eyes and release the cask front tiedown assembly from the front support, by removing the cask front support mounting hardware.

10. Remove the tiedown assembly from the transport vehicle.

11. Remove lifting trunnion cask body coverplate and install/torque cask lifting trunnions.

12. Attach the cask lifting yoke to a crane hook with the appropriate load rating. Engage the two yoke arms with the lifting trunnions at the top (front) end of the cask. Rotate/lift the cask to the vertical orientation and raise the cask off of the blocks of the rear support structure of the transport vehicle.

13. Place the cask in the vertical orientation in a decontamination area or other suitable location identified by the user and disengage the cask lifting yoke from the lifting trunnions.

14. Wash any road dust and dirt off of the cask and decontaminate cask exterior, as required by contamination survey results.

5.1.2.2 Preparation of Cask for Fuel Loading

The following loading procedures are based on the transportation cask having shipped bare fuel before and can be, potentially, both internally and externally contaminated. It is assumed the cask is positioned in an appropriate decontamination area, or in a location convenient for performing the steps described.

The transportation cask's continuing compliance should be confirmed with verification of annual maintenance, required by the CoC, having been successfully completed within the previous 12 months.

The following presents generic procedures for preparing the transportation cask for direct loading of fuel assemblies under water in a spent fuel pool.

1. Install appropriate work platforms/scaffolding to allow access to the top of the cask.

2. Decontaminate the surface of the closure lid and top cask surfaces as required.

3. Remove drain and vent coverplate bolts and cover-plates from the cask. Stage for inspection and reinstallation.

4. Connect vent hose to vent quick-disconnect and ensure the hose discharges into an appropriate rad waste handling system, as the cask interior may discharge possible airborne contamination and contaminated water.

5. Connect demineralized, or pool water supply, to the drain port quick-disconnect.

6. Fill cask using demineralized water supply until water discharges from the vent hose.

7. Remove the two closure lid bolts at locations marked for alignment pins and install two closure lid alignment pins.

8. Remove the remaining closure lid bolts. Clean and visually inspect the lid bolts and coverplate bolts for damage or excessive wear. Replace as required.

9. Attach the cask lifting yoke to a crane hook with the appropriate load rating and engage the cask lifting yoke arms with the lifting trunnions.

10. Attach the lifting eyes to the closure lid. Install the lid lifting sling to the eyes in the lid and to the lifting eyes on the strongbacks of the lifting yoke.

11. Carefully raise the cask to the necessary elevation to clear obstructions in the carry path.

12. Move the cask to the pool over the cask loading area. As the cask is lowered, spray the external surface of the cask with clean demineralized water to minimize external decontamination efforts.

13. After the cask is resting on the floor of the pool, disconnect the lifting yoke from the lifting trunnions and slowly raise the yoke, removing the lid, and raise to the operations floor.

14. Spray the yoke and lid, as they come out of the water to remove any possible contamination.

15. Position the lid in a staging area; disengage the lid slings and remove from the cask lifting yoke and stage for loading. When setting the closure lid down, protect the closure lid seals and sealing surfaces of the lid from damage. At a convenient time, inspect the closure lid seals and surfaces, replace seal or repair surfaces if necessary.

16. Visually examine the internal cavity, fuel basket and drain line to ensure that: (a) no damage has occurred during transit; (b) no foreign materials are present that would inhibit fuel placement or cavity draining; and (c) all required components are in place.

5.1.2.3 Fuel Loading and Cask Operations

The following presents generic procedures for loading fuel assemblies into the transportation cask under water in a spent fuel pool. It is expected that some sites will utilize their own craft to perform the fuel handling specific operations described. Specifically addressed in this sequence of operations is the process used to remove the cavity water prior to lifting the cask from the pool in order to reduce the "on-the-hook" weight.

1. Using site approved fuel identification, handling procedures and fuel handling equipment, engage the fuel handling tool to the top of the fuel assembly, lift it from the storage rack location, transfer it the transportation cask, and carefully lower into the designated location of the fuel basket. Care should be taken to avoid contact with any of the sealing surfaces on the top forging and the closure lid alignment pins.

Note: Each fuel assembly shall meet the license requirements, i.e. burn-up, enrichment and cool-time, for the transportation cask. It is expected that each site will develop the proper fuel loading plan for each shipment prior to cask loading operations.

2. Record the fuel identification number and basket position within the basket structure in the cask loading report, acquire independent verification.

3. Repeat steps 1 and 2 until the basket is fully loaded or until all desired fuel assemblies have been loaded. Partially loaded shipments shall meet the requirements of the license with respect to fuel parameters and location(s) in the basket structure.

4. Attach the lid handling slings, ensuring levelness, to an auxiliary crane hook and raise the lid for seal inspection.

5. Inspect the closure lid O-ring and replace if damaged

Note: If the closure lid seal is damaged and requires replacement, closure operations will require the new seal be tested to the leak tight requirements indicated in maintenance requirements.

6. Following the inspection of the closure lid O-rings, lift the closure lid and place it on the cask using the lid alignment pins to assist in proper lid seating and orientation. Visually verify proper lid position.

7. Disconnect the lid lifting device from the auxiliary crane hook and remove crane hook from area.

8. Connect the lifting yoke to the crane hook and lower the lifting yoke into the lifting position over the cask lifting trunnions

9. Engage the lifting arms to the lifting trunnions. Following visual confirmation of lift arm engagement, slowly lift the cask until the top of the cask is slightly above the pool water level.

10. Flush the cask lid area with clean water.

11. Install at least 6 lid bolts, equally spaced on the closure lid, torque to 120ft-lbs min.

12. Connect a nitrogen or helium gas supply capable of 35-40 psig to the Vent Port quick-disconnect.

13. Connect drain line to the drain port quick-disconnect. Ensure the discharge of the Drain line is directed back to the pool or to a radioactive waste handling system capable of handling liquids and gas.

14. Drain the cask cavity by supplying 35 to 40 psig nitrogen or helium to the cask cavity through the vent port quick-disconnect. Pressurization of the cavity with inert gas will purge the water from the cask through the drain line. Continue gas flow until all water is removed (observed when no water is coming from the drain line). Isolate the nitrogen or helium supply and disconnect the nitrogen or helium supply line from the cask.

15. After allowing for depressurization of the gas from the cavity through the drain line, remove the drain line from the cask. This leaves the cask and fuel with an atmospheric backfill of inert gas.

16. Continue the slow lift of the cask from the pool, while spraying the external cask surfaces with clean water to minimize surface contamination levels, to a predetermined elevation where the cask bottom will clear all obstructions in the path to the decontamination area.

17. Move the cask to the cask decontamination area and carefully lower to the floor

18. Continue lowering until the lift yoke lift arms are clear to disengage the cask lift trunnions

19. Open the lift yoke arms and carefully raise the lifting yoke until it fully clears the cask.

20. Remove the lift yoke and crane from the area.

21. Connect drain and vent lines to the cask port quick-disconnects.

22. Remove the closure lid alignment pins and install the remaining lid bolts and torque all bolts to the torque value specified in the sequence indicated on the closure lid.

23. Initiate vacuum drying by connecting a vacuum pump to the cask cavity via the vent and drain port quick-disconnects. Evacuate the cask cavity until a pressure of 4 mbar is reached. Continue pumping for a minimum of 1 hour after reaching 4 mbar. Valve off vacuum pump from system and using a calibrated vacuum gauge (minimum gauge readability of 2.5 mbar), observe for a pressure rise. If a pressure rise (ΔP) of more than 12 mbar in ten minutes is observed, continue pumping until the pressure does not rise more than 12 mbar in ten minutes. Repeat dryness test until cavity dryness has been verified ($\Delta P < 12$ mbar in 10 minutes). Record test results in the cask loading report.

24. While still in vacuum, valve in a supply of helium (99.9% minimum purity) to the vent port quick-disconnect and backfill the cask cavity to 0 psig helium pressure.

25. Disconnect all hoses

26. Install the drain and vent port coverplates. Torque the bolts to specified values.

27. Perform closure lid O-ring leakage testing as follows:

    a. Perform the preshipment leakage rate test to confirm no detected leakage to a test sensitivity of 1×10^{-3} ref cm^3/sec by pressurizing the O-ring annulus to 15 (+2, -0) psig and isolating for a minimum of 15 minutes. There shall be no loss in pressure during the test period.

    b. For O-rings that have been field installed due to damage or failed leakage testing (a), use a leak detector connected to the interseal test port to verify the total leakage rate is $\leq 9.3 \times 10^{-5}$ cm^3/sec (helium) (1) with a minimum test sensitivity of 4.7×10^{-5} cm^3/sec (helium).

28. Install the test port plug for the lid interseal test port and torque the plug to the value specified.

29. Perform port cover O-ring leakage testing as follows:

    a. Perform the preshipment leakage rate test to confirm no detected leakage to a test sensitivity of 1×10^{-3} ref cm^3/sec by pressurizing the O-ring annulus to 15 (+2, -0) psig and isolating for a minimum of 15 minutes. There shall be no loss in pressure during the test period.

    b. For O-rings that have been field installed due to damage or failed leakage testing (a), use a leak detector connected to the interseal test port to verify the total leakage rate is $\leq 9.3 \times 10^{-5}$ cm^3/sec (helium) (1) with a minimum test sensitivity of 4.7×10^{-5} cm^3/sec (helium).

30. Install the test port plug for the port cover interseal test ports and torque the plug to the value specified.

31. Perform final external decontamination and perform survey to verify acceptable level of removable contamination to ensure compliance with 49 CFR 173.443. Perform final radiation survey. Record the survey results.

32. Perform final visual inspection to verify assembly of the transportation cask in accordance with the CoC. Verify that the loading documentation has been appropriately completed and signed off.

5.1.2.4 Preparation for Transport

1. Engage the lift yoke to the cask lifting trunnions and move the cask to the cask loading area.

2. Load the cask onto the transport vehicle by gently lowering the rotation trunnion recesses into the rear support. Rotate the cask to horizontal by moving the overhead

crane in the direction of the front support. Maintain the crane cables vertical over the lifting trunnions.

3. Using a lifting sling, place the tiedown assembly over the cask upper forging between the top neutron shield plate and front trunnions. Install the front tiedown hardware to each side of the front support.

4. Remove cask lifting trunnions and install/torque lifting trunnion cask body coverplate.

5. Complete a Health Physics removable contamination survey of the cask to ensure compliance with 49 CFR 173.443. Complete a Health Physics radiation survey of the entire package to ensure compliance with 49 CFR 173.441.

6. Using the designated lifting slings and a crane of appropriate capacity, install the top impact limiter. Install the impact limiter retaining hardware and torque to the value specified

7. Repeat the operation for the bottom impact limiter installation.

8. Install security seals through holes where provided and record the security seal identification numbers in the cask loading report.

9. Install the personnel barrier/enclosure and torque all attachment bolts to the prescribed torque value. Install padlocks on all personnel barrier/enclosure accesses.

10. Complete a Health Physics radiation survey of the entire package to ensure compliance with 49 CFR 173.441.

11. Complete a Health Physics removable contamination survey of the transport vehicle to ensure compliance with 49 CFR 173.443.

12. Determine the transport index (TI) corresponding to the maximum dose rate at 1 meter from the cask. Record on the shipping documents.

13. Determine the appropriate Criticality Safety Index (CSI) assigned to the package contents in accordance with the Certificate of Compliance (CoC), and indicate the correct CSI on the fissile material labels applied to the package.

14. Apply placards to the transport vehicle in accordance with 49 CFR 172.500 and provide special instructions to the carrier/shipper for an Exclusive Use Shipment.

15. Complete the shipping documentation in accordance with 49 CFR Subchapter C.

5.1.3 Procedures for Loaded Cask Receipt, Unloading and Release for Shipment

This section presents the procedures to be followed for unloading the cask following transport of directly loaded fuel. Before initiating any unloading activities, the consignee/receiver of the package should confirm that they have received and are prepared to follow any special instructions for opening the package (reference 10 CFR 71.89).

5.1.3.1 Receiving Inspection – Loaded Cask

1. Perform radiation and removable contamination surveys in accordance with 10 CFR 20.1906, 49 CFR 173.441 and 173.443 requirements.
2. Move the transport vehicle with the transportation cask to the cask receiving area.
3. Secure the transport vehicle. Remove personnel barrier hold down bolts from the personnel barrier, remove the personnel barrier and store in a designated area.
4. Visually inspect the transportation cask while secured to the transport vehicle in the horizontal orientation for any signs of damage.
5. Remove tamper indication devices.
6. Attach slings to the upper impact limiter lifting points and remove impact attachment hardware.
7. Remove the upper impact limiter and store upright.
8. Repeat operation for the bottom impact limiter.
9. Attach a sling to the cask front tiedown assembly lifting eyes and release the cask front tiedown assembly from the front support, by removing the cask front support mounting hardware.
10. Remove the tiedown assembly from the transport vehicle.
11. Remove lifting trunnion cask body coverplate and install/torque cask lifting trunnions.
12. Attach the cask lifting yoke to a crane hook with the appropriate load rating. Engage the two yoke arms with the lifting trunnions at the top (front) end of the cask. Rotate/lift the cask to the vertical orientation, ensuring crane cables remain centered over the cask lift, and raise the cask off of the blocks of the rear support structure of the transport vehicle.
13. Place the cask in the vertical orientation in a decontamination area or other suitable location identified by the user and disengage the cask lifting yoke from the lifting trunnions.
14. Wash any road dust and dirt off of the cask and decontaminate cask exterior, as required by contamination survey results.

5.1.3.2 Preparation of the Transportation Cask for Fuel Removal

Unloading of fuel from the cask takes place under water in the spent fuel pool cask loading/unloading area.

1. Remove the port coverplates from the drain and vent ports in the closure lid. Attach a pressure test fixture to the vent port that will allow surveillance of the cask cavity for

any pressure buildup that may have occurred during transport. If a positive pressure exists, vent the pressure to the off-gas system connection to the vent port quick-disconnect and vent the pressure to the off-gas system.

2. Connect a cask cool-down system to the drain and vent quick-disconnects.

3. Loosen all bolts and remove all but 6, approximately equally spaced, closure lid bolts. Leave the 6 remaining closure lid bolts hand tight. Install the closure lid alignment pins at locations marked on the closure lid and the lid lifting eyebolts.

4. Attach the lifting yoke to a crane hook and engage the yoke arms with the lifting trunnions and attach lid handling slings to the closure lid.

5. Lift the cask and move it over to the cask loading area in the pool.

6. As the cask is lowered, spray the external surface of the cask with clean demineralized water to minimize external decontamination efforts. Slowly lower the cask until the cask head is just above the waterline.

7. Initiate cool-down by slowly (8–10 gpm) filling the cask cavity with clean demineralized water (cavity is full when water flows out of the vent port drain line). Circulate water through the cask until the water leaving the vent port drain line is within 50ºF of the average spent fuel pool water temperature.

8. Just prior to submerging the top forging of the cask, complete the unthreading of the 6 remaining closure lid bolts and remove them.

   Note: Use caution when removing these bolts as pressure may rise slightly in the cask during the time since completion of Step 8.

9. Slowly lower the cask into the pool.

10. Continue lowering the cask until it rests in the cask loading area on the pool floor.

11. Disconnect the lifting yoke from the lifting trunnions and move the yoke so that it will not interfere with fuel movements.

12. Using the closure lid lifting device attached to an auxiliary crane hook, remove the closure lid from the cask.

    Note: If the alternate method of cask handling is being used, slowly raise the lift yoke and the closure lid using the lid alignment pins to guide movement. Move the lift yoke and the closure lid out of the area so that it will not interfere with fuel movements.

13. Place the closure lid aside ensuring that the O-rings and O-ring grooves are protected from damage. Decontaminate, as necessary, and clean all sealing surfaces.

5.1.3.3 Fuel Removal

1. Perform visual inspection of the fuel contents and basket for any indications of damage during transport.

2. Using approved fuel identification and handling procedures, withdraw one fuel assembly from the basket and deposit it in the proper storage rack location. Be careful not to contact any of the sealing surfaces on the top forging or the closure lid alignment pins.

3. Record and document the fuel movement from the cask to the fuel rack.

4. Repeat steps 1 and 2 until all fuel assemblies have been removed from the cask.

5. Perform visual inspection of the empty cask/basket to ensure no debris left from unloading operations.

6. Attach the closure lid lifting slings to a crane hook, lift the closure lid and place it on the cask using the alignment pins to assist in proper seating. Visually verify proper lid position.

Note: O-ring seals on the lids, port coverplates and test plugs do not require replacement for an empty packaging shipment.

7. Disconnect the lid-lifting sling from the crane hook.

8. Attach the lifting yoke to the crane hook, lower to lifting position and engage lifting arms to lifting trunnions. Slowly lift the cask out of the pool until the top of the cask is slightly above the pool water level.

Note: As an alternative method, the cask and closure lid may be handled simultaneously. In the event that this method is chosen, instead of performing steps 4, 5 and 6, attach the lifting yoke to a crane hook and the closure lid to the lift yoke. Lower the lid and engage to the cask using the lid alignment pins. Engage lifting arms to lifting trunnions. Slowly lift the cask out of the pool until the top of the cask is slightly above the pool water level.

9. Attach a drain line to the drain port quick-disconnect.

10. Install at least four closure lid bolts approximately equally spaced on the bolt circle to hand tight. Remove the closure lid alignment pins.

11. Purge the water from the cask by pressurizing to 35 to 40 psig and hold until all water is removed (observed when no water is coming from the drain line). Adjust final internal cavity pressure to 0 psig.

12. Move the transportation cask to the cask decontamination area and disengage the lift yoke or lift beam and closure lid lifting slings if the alternate method of handling the closure lid was used. Remove the closure lid lifting eye bolts.

13. Move the cask lifting equipment away from the cask work area.

14. Install the remaining closure lid bolts and torque all of the closure lid bolts to the value specified in Table 5-1 in accordance with the bolt torque sequence shown on the closure lid.

15. Perform one final pressure blow-down of the cask body to remove as much residual water as possible.

16. Disconnect the vent and drain lines from the quick-disconnects.

17. Install the port coverplates over the vent and drain ports. Torque the coverplate bolts to the value specified.

18. Decontaminate the surfaces of the closure lid and the closure surfaces of the top forging.

5.1.3.4 Preparation of Empty Cask for Transport

1. Decontaminate all surfaces of the cask to acceptable release limits as defined in 49 CFR 173.

2. Attach the lifting yoke to a crane hook and engage the yoke arms with the lifting trunnions. Lift the cask onto the transport vehicle and lower to the horizontal position.

3. Using a lifting sling, place the tiedown assembly over the cask upper forging between the top neutron shield plate and front trunnions. Install the front tiedown bolts and lock washers to each side of the front support. Torque each of the tiedown bolts.

4. Remove cask lifting trunnions and install/torque lifting trunnion cask body coverplate.

5. Initiate Health Physics radiation and removable contamination surveys to ensure compliance with 49 CFR 173.441 and 49 CFR 173.443.

6. Using the designated lifting slings and a crane of appropriate capacity, install the top impact limiter. Install the impact limiter retaining rods into each hole and torque to the value specified.

7. Install the impact limiter attachment bolts and torque to the value specified.

8. Install the impact limiter lock wires (if required).

9. Repeat the operation for the bottom impact limiter installation.

10. Apply labels to the package in accordance with 49 CFR 172.200.

11. Install the personnel barrier/enclosure and torque all attachment bolts to the prescribed torque value. Install padlocks on all personnel barrier/enclosure accesses.

12. Complete the Health Physics radiation and removable contamination surveys to ensure compliance with 49 CFR 173 requirements.

13. Complete the shipping documents.

14. Apply placards, if required, to the transport vehicle in accordance with 49 CFR 172.500.

5.2 TIME AND MOTION ASSESSMENTS

Based on Exelon's bare fuel cask experience, it is recommended that, at the appropriate time, a program be established to adopt an operational approach to load / unload bare fuel utilizing a template similar to the steps currently in use at sites such as Peach Bottom Atomic Power Station which currently loads bare fuel transportation casks, e.g. TN-68. The time and motion information presented in Table 5-2 and Table 5-3, reflect the loading/unloading approach used by Exelon, noting that the loading/unloading steps shown are global in nature and may not reflect actual UNF handling and storage operations at individual reactor sites. The information also includes the minimum number of people that have to be trained and qualified for loading and unloading operations at the site. These numbers are taken from the typical crew sizes used at plant sites for loading and unloading. It is understood that unloading operations at an ISF may require much larger crews since the site potentially will receive fuel from multiple sites each week.

Management function personnel are not shown/ included for the crew complements, which are specifically focused on the loading/unloading operations. These additional management personnel would include the overall site Operations manager, Engineering personnel, plus supervisors in areas such as quality assurance, criticality safety, waste handling, physical/site protection, emergency preparations, and maintenance. Administrative personnel are also not included, which would include office functions comprising contracts and procurement, operations and maintenance procedure development, document control, records management, human resources, and employee concerns, etc.

The crews involved in loading/unloading are assumed to be separate from the crews working on cask transport, so additional personnel including escorts will be needed for the transportation work.

Once the bare fuel transportation cask shipment reaches its destination, the unloading of transportation casks follows the reverse procedure of the loading operations and this is described in detail in the time/motion section for unloading. When the transportation casks have been emptied of their cargo, they will be surveyed for radioactive contamination and any routine maintenance required by their certificates will be performed. Then the bare fuel transportation casks can either be placed into storage, or dispatched for reuse.

Separate cask maintenance activities will need to be developed to allow return-to-use cask maintenance (e.g., inspections, seal replacement) and scheduled cask maintenance (e.g., annual maintenance) to be performed separately from the canister transfer operations.

Table 5-2. Bare Fuel Cask Loading Time and Motion Assessment

Step #	Bare Fuel Cask Loading and Transport of Casks to Storage on Pad	Mechanics	Riggers	Supervisor	Operations	HP	QA/QC	Crane	Heavy Eq. Operator	Security	Total	Duration (hrs)	Cum. Dur.	Dose	Cum Dose
1	Preparation for Empty Cask Transport	3	0	1	0	0	1	0	0	2	7	2	2		
2	Empty Cask Transport to Rx Bldg	4	2	1	0	0	0	1	1	0	9	4	6		
3	Cask Movement from Rx Bldg Ground Floor to Rx Bldg RFF	5	2	1	0	1	0	1	0	0	10	3.5	9.5		
4	Cask Disassembly (Protective Cover and Neutron Shield)	3	2	1	0	2	0	1	0	0	9	3	12.5		
5	Cask Disassembly (Covers and Lid)	3	2	1	0	1	1	1	0	0	9	4	16.5		
6	Cask Lid, Drain, Vent and OP Port Seal Replacement & Misc. Inspections	3	2	1	0	1	1	1	0	0	9	3	19.5		
7	Inspection of Flange, Alignment Pins and Cask Cavity	2	2	1	0	1	1	1	0	0	8	1	20.5	15 mr	15 mr
8	Cask Insertion into Fuel Pool	4	2	1	2	2	0	1	0	0	12	3	23.5		
9	Cask Fuel Loading	0	0	1	3	1	0	0	0	0	5	8	31.5		
10	Basket Hold Down Ring and Lid Installation	0	3	1	4	2	0	1	0	0	11	3	34.5	50 mr	65 mr
11	Cask Removal from Fuel Pool and Draining	4	3	1	2	3	0	1	0	0	14	6	40.5		
12	Cask Placement on Fuel Floor and Decon	4	2	1	0	2	0	1	0	0	10	3	43.5		
13	Lid Bolt Installation	4	0	1	0	1	1	0	0	0	7	3	46.5	105 mr	170 mr
14	Cask Drying	3	0	1	0	1	1	0	0	0	6	10	56.5		
15	Helium Fill	2	0	1	0	1	1	0	0	0	5	2.5	59		
16	Preliminary Leak Test	2	0	1	1	1	1	0	0	0	6	2	61		
17	Cask Reassembly	4	0	1	0	2	1	1	0	0	9	5	66		
18	Cask Leak Test	3	0	1	0	1	1	0	0	0	6	3	69	40 mr	210 mr
19	Cask Preparation for Transport	2	0	1	0	1	1	0	0	0	5	1	70		
20	Cask Movement from Rx Bldg RFF to Rx Bldg Ground Floor	4	3	1	0	2	0	1	0	0	11	2	72		
21	Preparation for Cask Transport	3	1	1	0	1	0	0	0	0	6	1	73		
22	Cask Transport from Rx Bldg to ISFSI Pad	4	2	1	0	2	0	0	1	4	14	4	77		
23	Cask Placement on ISFSI Pad	4	2	1	0	2	0	0	1	3	13	1	78	42 mr	252 mr

Table 5-3. Bare Fuel Cask Unloading Time and Motion Assessment

Step #	Bare Fuel Cask Unloading Time and Motion Assessment	Mechanics	Riggers	Supervisor	Operations	HP	QA/QC	Crane	Heavy Eq. Operator	Security	Total	Duration (hrs)	Cum. Dur.	Dose	Cum Dose
1	Preparation for Loaded Cask Transport	4	2	1	1	2	0	0	1	5	16	4	4		
2	Loaded Cask Transport to Rx Bldg	4	2	1	0	2	0	0	1	5	15	3	7		
3	Cask Movement from Rx Bldg Ground Floor to RFF	4	2	1	0	2	0	1	0	0	10	3	10		
4	Cask Disassembly (Protective Cover and Neutron Shield)	4	2	1	0	2	0	1	0	0	10	2	12		
5	Cask Venting/Sampling and Preparation for Installation in Fuel Pool	4	2	1	1	2	1	0	0	0	11	12	24	57 mr	57 mr
6	Cask Installation into Fuel Pool	4	2	1	2	3	0	1	0	0	13	4	28		
7	Cask Flooding and Cask Lid Removal	4	2	1	2	3	0	1	0	0	13	5	33		
8	Cask Fuel Unloading	0	0	1	3	2	1	1	0	0	8	9	42	50 mr	107 mr
9	Empty Cask Removal from Fuel Pool and Draining	4	2	1	2	3	0	1	0	0	13	5	47		
10	Empty Cask Placement on Fuel Floor AND Decon	4	2	1	0	3	0	1	0	0	11	3	50	25 mr	132 mr

5.3 ANTICIPATED WORKER DOSE

The last two columns of Table 5-2 and Table 5-3 present estimates for the total worker dose for several parts of the overall cask loading and unloading process, as well as the cumulative dose (that increases as the process proceeds). The final result, presented in the lower right corner of the tables, is the estimated total collective worker dose for the entire loading or unloading process. The estimated doses are based on the TN-68 cask, for which Exelon has operating experience.

The loading and unloading processes for the bare fuel transportation cask described in this report should be very similar to that of the TN-68 cask, as both are non-canister-based casks that are placed into the spent fuel pool and directly loaded, and both casks employ a bolted lid. The only difference is that the bare fuel transportation cask will be placed on a rail car, as opposed to being placed on an ISFSI pad (which will not significantly affect doses). Thus, with respect to the set of process steps, required personnel, and step durations, the data presented in Table 5-2 and Table 5-3, which are based on the TN-68 cask, will be very similar to those that will apply for the bare fuel transport cask. The only source of significant difference in overall worker dose, between the two cask systems, would be differences in cask exterior dose rates.

The Technical Specifications for the TN-68 cask give the following limits for cask exterior dose rates (for a bounding assembly payload):

- 120 mrem/hr gamma and 10 mrem/hr neutron on the cask top (protective cover) surface
- 75 mrem/hr gamma and 10 mrem/hr neutron on the sides of the radial neutron shield
- 360 mrem/hr gamma and 45 mrem/hr neutron on the side surfaces of the cask above the radial neutron shield
- 210 mrem/hr gamma and 70 mrem/hr neutron on the side surfaces of the cask below the radial neutron shield

The shielding analyses for the bare fuel transportation cask, presented in Section 4.3.3, show that the dose rates on the exterior radial surface of the cask neutron shield are under 50 mrem/hr. On the exposed parts of the radial cask body surface, above and below the radial neutron shield, the dose rates are approximately 100 mrem/hr or less. (Note that the peak cask radial surface dose rates presented in the Section 4.3.3 tables are generally those that occur above or below the radial neutron shield. The peak dose rates on the radial neutron shield surface are generally not presented.) Thus, the radial cask exterior dose rates for the bare fuel transport cask are lower than those specified for the TN-68 cask.

The dose rates on the top and bottom surfaces of the bare fuel transport cask, when the impact limiters are not present, are much higher than those specified for the top surface of the loaded and closed TN-68 cask (i.e., several rem/hr vs. 130 mrem/hr). It should be noted that the specified TN-68 dose rate of 130 mrem/hr applies when the protective top cover is on, whereas many of the loading steps occur when that cover is off. Thus, the doses presented in Table 5-2 and Table 5-3 for many of the steps are not based upon that (low) dose rate. Also, the TN-68 cask requires the installation of the protective cover, which adds some exposure.

It is clear that the use of temporary shielding will be required in order to reduce dose rates on the cask top end during the cask loading unloading processes. NAC International has extensive

experience with casks that have similar amounts of top end shielding (i.e., ~8 inches of steel), and has successfully kept personnel exposures low through the use of temporary shielding and other measures.

Given the lower dose rates on the bare fuel transport cask side (vs. the TN-68 cask), and assuming the use of temporary shielding on the cask top end; during the cask loading/unloading process, it is concluded that the total worker exposures shown (based on the TN-68 cask) in Table 5-2 and Table 5-3 are fairly similar to those that will occur for the bare fuel transport cask.

5.4 OPERATIONAL EFFICIENCIES AND COMPARISONS WITH CURRENT PRACTICE AND EXPERIENCE

The designs developed by the Team for the bare fuel and DFC transportation casks offer equivalent technologies to those currently used by the nuclear power plants. Based on the dry storage cask experiences of Exelon, the following items have been identified as opportunities to achieve optimum operational efficiencies.

1. Optimization of Vacuum Drying

One area where there could be improved time/dose/cost performance is optimization of the vacuum drying process prior to sealing of the bare fuel cask after fuel loading. Vacuum drying is often time-consuming, labor intensive and difficult to consistently predict for duration to complete. It is possible to utilize automation to more consistently perform and complete this operation, while reducing overall dose.

Changes in canister processing at Catawba Station from the NAC-UMS® to the MAGNASTOR® system warranted new technologies to maximize efficiency and minimize personnel exposure. EMS Solutions, Inc. supplied the E1000LT Vacuum Drying Skid (VDS), which performs all ancillary activities from weld hydrostatic testing to helium backfill from a single location.

The E1000LT VDS requires only a single set of connections to the canister for all of its processing functions (i.e., one set of boom lines to the vent and drain ports, as well as thermocouple connections to the transfer cask). Compared to multiple separate pieces of equipment for each function (e.g., hydrostatic testing, vacuum drying, etc.), this configuration minimizes occupancy time on top of the loaded system, reducing personnel exposure. Elimination of multiple equipment manipulations also reduces the probability of human performance-induced component events.

The E1000LT VDS has onboard data logging capabilities, allowing for automated detailed record of canister conditions, including: Transfer Cask cooling system performance, drain down flow rates, water temperature, vacuum drying and backfill conditions, and evolution durations. The E1000LT VDS gathers much more key parameter data than typical dry storage data logging systems. These data can be made available for use in detailed best-estimate computer simulations of fuel conditions during vacuum drying, thereby demonstrating margin to safety and regulatory thermal limits and establishing initial conditions for analyses of fuel mechanical performance during extended storage.

The E1000LT VDS performs all of the following functions:

•Transfer Cask annulus cooling system temperature monitoring

•Canister closure lid weld hydrostatic pressure testing

•Water drain down and totalizing

•Vacuum drying and dryness testing

•Helium backfill and totalizing

System loading data from the E1000LT VDS can be used for extended storage studies and license renewal activities.

2. Resource Utilization

Resource utilization to allow continuous 24/7 work to complete the greatest number of loadings/unloadings in the shortest time is an area that merits further review. An examination of the resource utilization plans for sites which have completed large-scale loadings could provide valuable information. Zion Station, for example, has loaded 1800 PWR assemblies to MAGNASTOR Overpacks in eleven (11) months using 4 plus crews working 24/7 including holidays.

6 EQUIPMENT MAINTENANCE REQUIREMENTS

6.1 CASK MAINTENANCE

To ensure that the transportation cask packaging is in compliance with the requirements of the regulations and the CoC, the following cask maintenance program for the transportation cask should be established. The transportation cask maintenance program shall specify the inspections, tests, and if applicable, replacement of components to be performed, and the frequency and schedule for these activities. A detailed, written inspection, test, component replacement, and repair procedure should be included in a transportation cask operations manual. The transportation cask operations manual should be prepared and issued to the users of the packaging prior to first use of the cask in any configuration.

6.1.1 **Structural and Pressure Tests of the Cask**

The two lifting trunnions and the two rotation trunnion recesses should be visually inspected prior to each shipment. The visual inspections should be performed in accordance with approved written procedures, and inspection results shall be evaluated against established acceptance criteria.

Evidence of cracking on the load bearing surfaces shall be cause for rejection of the affected trunnion until an approved repair has been completed, and the surfaces re-inspected and

accepted. Such repairs shall be implemented and documented in accordance with an approved Quality Assurance (QA) program.

The lifting trunnions are also inspected annually in accordance with Paragraph 6.3.1(b) of ANSI N14.6. During periods of nonuse of the transportation cask, the inspection of the trunnions may be omitted provided that the trunnions are inspected in accordance with this section prior to the next use.

6.1.2 **Leak Tests**

Leak tests are performed in accordance with the methodologies and requirements of ANSI N14.5-1997, using approved written procedures.

6.1.2.1 Containment Periodic Verification Leak Test

EPDM O-rings used for the containment boundary seals need not be replaced during each cask loading operation but instead are tested during containment system periodic testing to verify leak test requirements. Operational requirements for seal verification testing are outlined in the Operations Section.

EPDM O-rings shall be demonstrated by leak testing annually or when replaced.

All annual verification leak testing, or if O-rings are replaced, shall be performed using approved written test procedures and in accordance with the test requirements and acceptance criteria established for the containment fabrication verification leak test.

During periods when the cask is not in use for transport, the periodic verification leak test need not be performed on an annual basis, but shall be re-performed prior to returning the cask to service and use as a transportation package.

6.1.2.2 Containment Acceptance Criteria

For the containment verification leak tests, the leak rate for containment boundary O-rings shall be less than or equal to 2×10^{-7} cm^3/sec (helium). The minimum test sensitivity for both the fabrication verification and verification leak tests shall be 1.0×10^{-7} cm^3/sec (helium). The maximum (total) permissible leak rate for all containment boundary EPDM O-rings shall be less than or equal to 9.3×10^{-5} cm^3/sec (helium). The minimum test sensitivity for both the fabrication verification and verification leak tests shall be 4.7×10^{-5} cm^3/sec (helium). Unacceptable leak test results shall be cause for rejection of the component tested. Corrective actions, including repair or replacement of the O-rings and/or closure component, shall be taken and documented as appropriate. The leak test shall be repeated and accepted prior to returning the cask to service.

6.1.3 **Subsystems Maintenance**

There are no subsystems maintenance requirements on the transportation cask.

6.1.4 **Valves, Rupture Disks and Gaskets on the Containment Vessel**

There are no valves on the transportation cask packaging providing a containment function. Quick-disconnects, located on the vent, drain, lid interseal test, are provided for ease of cask operation.

The quick-disconnect shall be inspected during each cask loading and unloading operation for proper performance and function. As necessary, the subject quick-disconnect shall be replaced. The quick-disconnects shall be replaced regardless every two years during transport operations.

There are no rupture disks on the transportation cask containment vessel.

All O-rings on the transportation cask shall be visually inspected for damage during each cask operation. EPDM O-rings shall be replaced annually and as required, based on leak testing results and inspections during cask operations.

6.1.5 **Shielding**

The gamma and neutron shields of the transportation cask packaging do not degrade with time or usage. The radiation surveys performed by licensees prior to transport and upon receipt of the loaded cask provide a continuing validation of the shield effectiveness of the transportation cask.

6.1.6 **Periodic Thermal Test**

A periodic thermal test program should be established for each operational transportation cask packaging. During use of the packaging for transport operations, the periodic thermal test will be performed every five years, or prior to the next use if the period exceeds five years. The periodic thermal test shall be performed in accordance with written, approved procedures.

6.1.7 **Miscellaneous Inspections**

6.1.7.1 Impact Limiters

The transport impact limiters shall be visually inspected prior to each shipment. The limiters shall be visually inspected for gross damage or cracking to the stainless steel shells in accordance with approved written procedures and established acceptance criteria. Impact limiters not meeting the established acceptance criteria shall be rejected until repairs are performed and the component inspected and accepted.

6.1.7.2 Cask Body

The cask cavity shall be visually inspected prior to each fuel loading. Evidence of gross scoring of the cavity internal surface, or build-up of other foreign matter in the cask cavity that could block the cavity drainage paths shall be cause for rejection of the cask for use until approved maintenance and/or repair activities have been acceptably completed. The basket assembly shall be visually inspected for deformation of the basket disks or tubes. Evidence of damage shall be cause for rejection of the basket until approved repair activities have been completed, and the basket has been re-inspected and approved for use.

Any accumulated contamination within the cask cavity or basket structure shall be assessed in accordance with user developed criteria and, if required, rectified in accordance with user developed methods. It is not expected that residual contamination will challenge the regulatory limits on empty cask shipments.

The overall condition of the cask, including the fit and function of all removable components, shall be visually inspected and documented during each cask use. Components or cask conditions which are not in compliance with the CoCs shall cause the cask to be rejected for transport use until repairs and/or replacement of the cask or component are performed, and the component inspected and accepted.

The results of the all visual inspections, leak tests, shielding and radiological contamination surveys; fuel identification information for the package contents; date, time, and location of the cask loading operations; and remarks regarding replaced components shall be included in a cask loading report for each loaded cask transport. The requirements of the cask loading report should be detailed in the transportation cask operations manual.

6.1.8 **Maintenance Program Schedule**

Table 6-1 presents a typical overall maintenance program schedule for a transportation cask.

Table 6-1. Maintenance Program Schedule

Task	Frequency
Cavity Visual Inspection	Prior to Fuel Loading
Basket Visual Inspection	Prior to Fuel Loading
O-ring Visual Inspection	Prior to Fuel Loading
Outer Lid, Inner Lid and Port Coverplate Bolt Visual Inspection	Prior to installation during each use
Cask Visual and Proper Function Inspections	Prior to each Shipment
Lifting and Rotation Trunnions Visual Inspection Liquid Penetrant Inspection of surfaces	 Prior to each Shipment Annually during use
Maintenance Periodic Leak Rate Test of Inner Lid and Port Cover-plate O-rings	For EPDM O-rings, annually or when replaced. For metallic O-rings, prior to each shipment
Pre-shipment Leak Rate Test	Prior to shipment for casks with EPDM O-rings
Transport Impact Limiter Visual Inspection	Prior to each shipment
Quick-disconnect Inspection for Proper Function	During each Cask Loading/Unloading Operation
Quick-disconnect Replacement	Every two years during transport operations
Metallic O-ring Replacement	Prior to installation for a loaded transport
EPDM O-ring Replacement	Annually, or more often, based on inspection or leak test results
Inner and Outer Lid Bolt Replacement	Every 240 bolting cycles (Every 20 years at 12 cycles per year)
O-ring Replacement	Every two years during transport operations or as required by inspection
Periodic Leakage Rate Test	Performed within 12 months prior to each shipment for EPDM O-rings. No testing needed for out-of-service packaging.
Periodic Thermal Test	Every five years during transport operations, or prior to transport following extended storage periods exceeding five years.

6.2 AUXILIARY EQUIPMENT MAINTENANCE

The general operations equipment used for loading and processing the transport cask (i.e. vacuum pumps, water pumps, etc.) should be maintained in accordance with the manufacturer's instructions. The single component controlled by regulations, with respect to maintenance, is the lifting yoke. The lifting yoke is designed and maintained in accordance with ANSI N14.6. As such, the lifting yoke has to meet the same maintenance criteria as the lift trunnions on the transport cask.

The lifting arms, lift pins and the load bearing strong-back lifting plates should be visually inspected prior to each loading operation. The visual inspections should be performed in accordance with approved written procedures, and inspection results shall be evaluated against established acceptance criteria. Evidence of cracking on any of the load bearing surfaces shall be cause for rejection of the affected component until an approved repair has been completed, and

the surfaces re-inspected and accepted. Such repairs shall be implemented and documented in accordance with an approved QA program.

The lifting yoke is also inspected annually in accordance with Paragraph 6.3.1(b) of ANSI N14.6. During periods of nonuse of the system, the inspection of the lifting equipment may be omitted provided it is inspected in accordance with this section prior to the next use. Typically, the lifting yoke and transportation cask are certified together.

The overall condition of the lift yoke, including the fit and function of all removable components, shall be visually inspected and documented during each cask operation.

6.3 UK LESSONS LEARNED AND EXPERIENCE FROM MAINTAINING A FLEET OF BARE FUEL CASKS

Following a request from the DOE during the Initial Progress Review Meeting, the Team contacted Energy*Solutions* EU Ltd. who are responsible for Energy*Solutions* European operations, in order to obtain Sellafield experience and lessons learned from operating a fleet of bare fuel casks (or flasks as they are referred to in the UK) for Magnox, Advance Gas-cooled Reactor (AGR) and LWR SNF. Magnox fuel is clad in magnesium alloy, AGR fuel in stainless steel, and LWR fuel in zircaloy.

At the Sellafield site, the Magnox and AGR flasks (also referred to as the “cuboid flask designs”) are maintained within the B39 facility and the LWR flasks were maintained within the B550 facility.

The flasks are pressure tested at each use local to the Inlet/Export Cell, together with an inspection of the lifting trunnions and shock absorbers (impact limiters) for damage. If they are discovered to be leaking or have suffered damage, then maintenance of the offending items is carried out. They are also subject to biennial servicing, which consists of dye penetrant checking of lifting trunnions, paint touch- ups, O-ring seal replacements, and heli-coil replacement if the lid bolts have sheared. To undertake this work they are decontaminated in an open clad area by water washing, and debris removal is done remotely with long handled tools with internal paint stripped using a hot aqueous solutions.

A past modification of the B39 facility was to add 2 cell areas for decontamination of the flask internals which included the facility to cut up redundant skips (frame used inside the flasks to carry SNF- equivalent to the baskets in this report) remotely. This included remote de-sludging and debris removal using high pressure water jetting.

Every 5 years the flasks are taken out of service for a full- overhaul, which lasts around 13 weeks and includes internal decontamination and washout, internal and external grit blasting followed by full strip-downs, machining of the seal grooves and replacing the heli-coil inserts in the flask body, followed by full paint re-sprays internally and externally and concluding with a final pressure test. This process requires the use of a large milling machine in the B39 facility.

The cuboid flask fleet size originally consisted of 68 flasks of which, for both Magnox and AGR, only 1 flask was out for full service at any one time, and no more than 2 or 3 were undergoing short term repairs and overhauls at any one time leaving a fleet of around 60 operating flasks. At

its peak, the cuboid flask fleet was delivering over 1,000 Te of Magnox to the site (2 Te per flask), and AGR was delivering 200 Te to the site (1 Te per flask). Each flask did of the order of 25-30 trips per year to Sellafield, with 2 week turnarounds. As a comparator, the Sellafield Fuel Handling Plant (FHP) currently still receives around 15-20 flasks per week total from Magnox and AGR combined because of the large scale defueling programs at the UK Wylfa and Calder nuclear power stations.

The cylindrical LWR flasks did less traffic than this because the turnaround time was much longer from Europe and Japan, although the flask payloads were higher (typically 12 PWR or 20 BWR assemblies per flask – about 6 Te payload).

Key lessons learned are:

- There is an ongoing requirement to maintain the flask fleet with this scale.
- Both planned and breakdown maintenance capability is required (which is often only discovered after discharging contents).
- There is likely to be a build-up of debris internally. This was particularly so with German BWR plants, where large quantities of crud were found in Multi Element Bottles (MEB)s[16], but also true for Magnox 180 day cooled fuel.
- If applicable, paint damage repair is required between major overhauls
- Large machinery is required for repair in a contaminated area.
- In the First Generation Magnox Storage Ponds (FGMSP) there has been a significant build- up of activity on the empty skips due to corrosion of, and damage to the magnesium alloy cladding of the Magrnox fuel, stored there for lengthy time periods. Over the years, a large quantity of 'furniture' (skips and other mechanical items) has accumulated in fuel pools (or ponds as they are referred to in the UK); 1200 skips in the FGMSP and nearly 2000 in the FHP.
- In the FGMSP, the skips are stored in a high pH (11.5 -13.5) environment, this being necessary to limit the corrosion of the magnesium alloy fuel cladding.
- Spares control is a real issue for quality assurance.

[16] Multi Element Bottles (MEB)s which weigh around three tons each are used to hold LWR spent fuel assemblies which are then placed in transport flasks and sent to Sellafield for reprocessing. On arrival, the MEBs are removed from the flask and transferred to a storage pond.

7 ABILITY TO FABRICATE

The transportation cask described in this report incorporates design features to ensure it can be fabricated readily. There are no areas of the design which require any welding processes other than those typically used for similar construction. As the design is predominantly based on current cask technologies (NAC-STC, NAC-UMS and MAGNATRAN), there are virtually no "special methods" to be addressed. Placement of the lead gamma shield and neutron shield is similar to that of previous designs. The attachment of the heat fins to the outer shell will require a copper to stainless weld, but the American Welding Society (AWS) and the ASME have approved processes and consumables to address this process.

Qualification of suppliers capable of building a transportation cask, in conformance with a license with respect to an approved quality program, is similar to that currently invoked for the fabrication of canisters. Of more importance is the shop's capability to build a heavy vessel to National Board of Boiler and Pressure Vessel Inspectors criteria and possess the necessary equipment to machine large diameter and very long sections. Large scale vertical (20') turning centers for inside and outside vessel machining as well as large scale machining centers for large diameter (8'-9'), thick section forgings are required to effectively build transportation casks at any quantity. Capability to either subcontract or perform onsite lead pouring with adequate procedural controls to ensure lack of voids is essential.

With respect to fabrication and delivery of the impact limiters, there is precedence in their being fabricated by a separate vendor. Again, the ability to subcontract quality related fabrication and control the product and delivery is essential.

The 32-PWR, 28-PWR, 68-BWR and 61-BWR basket assemblies are all designed using proven features that can be easily machined, formed, and assembled by qualified fabricators. The 32-PWR and 28-PWR basket assemblies consist of welded subassemblies that are coated with electroless nickel (EN) plating prior to welding the final assembly. The regions of the basket subassemblies that must be welded after plating are masked off to prevent chemical contamination of the final assembly welds. After final welding, touch-up coating is applied to the accessible local areas around the final basket welds to inhibit corrosion. These fabrication techniques are similar to those used on other EN plated structures, such as the NAC MAGNASTOR baskets. The 68-BWR and 61-BWR basket assemblies are constructed from individual precision machined parts that are easily assembled and welded using custom fixtures. A water-jet table is used to machine the 68-BWR and 61-BWR spacer plates to precise tolerances. The carbon steel spacer plates used in the basket interior are coated with EN plating for corrosion protection. The basket components are then assembled and secured by welding the support rods to the end spacer plates. The fabrication techniques used for the 68-BWR and 61-BWR basket assemblies are similar to those used for other tube-and-disk basket designs, such as NAC-UMS.

8 USABILITY

As discussed in Section 4.2, the proposed baskets can accommodate the entire US spent PWR and BWR fuel inventory, with the exception of South Texas fuel and CE 16×16 fuel with control components (whose length exceeds that of the cask cavity). Some future assembly types, including AP1000 fuel, will also be too long for the proposed cask and basket design. As discussed in Section 13, a longer version of the proposed cask and basket designs, which can be used with a 150 ton plant crane, could be designed.

The proposed cask systems can accommodate any fuel assembly payload that has an overall heat generation level of 24 kW or less, with allowable fuel burnup levels up to 62.5 GWd/MTU. With respect to criticality, the system will be able to accommodate the entire US spent fuel inventory, the only qualification being that a slight reduction in payload capacity may be required for a very small fraction of shipments.

The cask systems will be able to accommodate all partial fuel assemblies (i.e., intact assemblies with one or more fuel rods missing), although such assemblies may have to be placed into basket periphery cells. It is expected that the proposed cask system will be able to accommodate mixed-oxide (MOX) fuel assemblies and stainless steel clad fuel assemblies, though some additional analyses may be necessary depending on their caharacteristics.

The primary proposed cask and basket designs, described in Section 4.1, will require a plant spent fuel pool crane capacity of 125 tons. Most US nuclear plant sites have a crane capacity of 125 tons or more. Some sites, however, have crane capacities between 100 and 125 tons. A smaller cask system that can be used with a 100 ton plant crane is discussed in Section 12.

Two cask cavity length options have been designed. The longer cavity length cask can accommodate all US PWR and BWR assembly types, with or without inserted control components, with the exceptions discussed in the first paragraph above. However, if a full payload of PWR assemblies that have a total weight (including any inserted control components) in excess of 1,500 pounds is loaded into the long-cavity cask, the required plant spent fuel pool crane capacity will exceed 125 tons. B&W 15×15 and B&W 17×17 assemblies, as well as W 15×15 and W 17×17 assemblies with control components, weigh more than 1,500 lbs. A crane capacity of 125 tons is sufficient to accommodate full payloads of all US BWR assembly types, with or without flow channels, in the long-cavity cask. The short-cavity length cask can accommodate full payloads of PWR assemblies with weights up to 1,725 lbs (which is bounding for all US PWR assembly types), without requiring a pool crane capacity in excess of 125 tons. However, the shorter-cavity cask cannot accommodate longer PWR assembly types such as CE 16×16. CE 16×16 assemblies weigh less than 1,500 lbs., and can therefore be accommodated by the long-cavity cask.

8.1 PLANT LOADING SCENARIO EVALUATIONS

Evaluations of potential loading scenarios are presented in the sub-sections below. The first evaluation verifies that the proposed cask systems will be able to take fuel from operating plants as necessary to assure full core offload capability (without the plant having to resort to additional on-site dry storage). The second evaluation determines how many years after plant shutdown

would be required to fully unload a shutdown plant's spent fuel pool, using the proposed cask systems.

8.1.1 Loading Scenario Assumptions

The following assumptions are made for the loading scenario evaluations, based on discussions with utility partners.

A typical two-unit PWR spent fuel pool can accommodate up to 3000 assemblies. A PWR typically has a 1.5 year operating cycle, and will discharge approximately 93 assemblies at the end of each cycle. The spent fuel pool for a single BWR plant may contain up to 4000 assemblies. A BWR may have an operating cycle of two years, with such a cycle being necessary to produce high (approximately 50 GWd/MTU) burnup fuel. At the end of the two year cycle, approximately 300 assemblies are discharged.

Based on the numbers above, a PWR pool (containing 1500 assemblies for each plant) can hold up to 16 discharge cycles-worth of fuel. Two cycles must be reserved to maintain full core offload. In the reactor shutdown case, the pool is assumed to be completely full, with 16 batches of fuel that includes all three batches that resided in the reactor at shutdown. During operation, at most 14 batches can be in the pool. Thus, as each cycle is 1.5 years long, this means that the pool can accommodate 21 years-worth of fuel before fuel removal from the pool (into dry storage or off-site shipment) is necessary.

For the BWR plant, the pool can hold as much as 13 plant discharges of fuel, where space for two batches must be held in reserve to accommodate full core offload. After shutdown, the pool will hold 13 batches of fuel, including all three batches present in the reactor at the time of shutdown. During operation, 11 batches may be present in the pool.

8.1.2 Operating Plant Loading Scenario

The objective of this evaluation is to determine if the proposed cask system can enable an operating plant to continue operation without having to load fuel into dry storage after the bare fuel transportation cask becomes available. Thus, the cask system must be able to ship fuel assemblies at the same rate that they are created by the plant. The cask must also be able to accommodate the burnup levels and cooling times of the assemblies that would require shipment.

A PWR plant will generate 93 assemblies every 1.5 years. This can be accommodated by three casks using the 32P basket/cask. A BWR plant will generate approximately 300 assemblies every two years. This can be accommodated by five casks using the 68B (or 61B) basket/cask. Thus DOE needs to target making up to 3 shipments per year at any given plant to obviate the need for new dry storage.

The remaining question concerns the heat and source terms (i.e., the burnup and cooling times) of the assemblies that require shipment. One possible way to accommodate an operating plant is to have the cask system take the longest cooling time fuel in the pool. Just before every plant discharge, the cask arrives and ships the oldest batch of assemblies in the pool. With this approach, the pool could be thought of as a conveyer belt, where assemblies that "fall off" the far (longest cooling time) end of the conveyer belt are shipped off.

A PWR spent fuel pool will contain at most 14 cycle batches of assemblies during plant operation. Just before the next discharge, the oldest batch of assemblies will have a cooling time of approximately 21 years. PWR fuel with a burnup level of 55 GWd/MTU, a typical initial enrichment (for that burnup level) of 4.5%, and a cooling time of 21 years generates just under 0.75 kW/assembly, even if an upper bound assembly PWR uranium loading of 0.47 MTU is assumed.

Thus, if the *average* burnup level of the PWR assembly batches is 55 GWd/MTU or less, the cask will be able to accommodate full batches of such fuel at the necessary cooling time of 21 years, while meeting the 24 kW payload heat generation limit. Variations in assembly heat generation (within the batch) due to variations in burnup and initial enrichment can be accommodated by zone loading the cask (where hotter assemblies are placed near the basket center).

If batch average burnup levels are higher than 55 GWd/MTU there may be an issue, at least for assembly types with the maximum uranium loading (near 0.47 MTU). It is unclear whether or not average PWR fuel batch burnup levels will exceed 55 GWd/MTU in the future. If average burnup levels do exceed 55 GWd/MTU, the cask's allowable overall payload heat generation level will have to be increased slightly to fully accommodate operating PWR plants. Alternatively, shipments could be made at less than full cask capacity (e.g., 30 assemblies instead of 32 could be shipped).

A full BWR spent fuel pool will contain at most 11 cycle batches of assemblies during plant operation. Just before the next discharge, the oldest batch of assemblies will have a cooling time of approximately 22 years. BWR fuel with a burnup level of 60 GWd/MTU, a typical initial enrichment (for that burnup level) of 4.75%, and a cooling time of 22 years generates under 0.353 kW/assembly, even if a high assembly BWR uranium loading of 0.2 MTU is assumed. Thus, the cask system can accommodate batches of 22 year cooled BWR assemblies with an average burnup level up to 60 GWd/MTU without exceeding the 24 kW payload heat generation limit. Average BWR fuel batch burnup levels will not exceed 60 GWd/MTU. It is therefore concluded that the cask system should be able to accommodate operating BWR plants, and keep them running without having to employ dry storage.

8.1.3 **Shutdown Plant Loading Scenario**

The objective of this evaluation is to determine how quickly all the fuel could be removed from the spent fuel pool of a plant that has just shut down. At the point of shutdown, there will be 16 batches of fuel in a PWR pool and 13 batches of fuel in a BWR pool (per the Section 8.1.1 assumptions), with the youngest batch having zero cooling time.

8.1.3.1 Calculation Assumptions

With respect to maximum possible throughput (cask loading speed), it is assumed that once a plant is shutdown, it can focus on cask loading efforts and therefore load them at a much faster rate. As the experience at the Zion plant shows, once preparations have been made, an entire spent fuel pool can be unloaded in as little as a year. Thus, throughput issues will not be the determining factor with respect to how soon a shutdown plant's spent fuel pool can be unloaded.

The issue is how long one will have to wait until the assemblies in the pool have cooled down enough to be shipped.

Due to the cask's 24 kW payload heat generation limit, the average assembly heat for a cask shipment must be no more than 0.75 kW and 0.353 kW, for the PWR and BWR baskets, respectively. One point that must be understood is that getting started early (i.e., shipping some of the colder fuel before the average assembly heat generation for the spent fuel pool inventory falls to the above levels) does not help. In fact, it actually delays the date at which the last assemblies in the pool can be shipped. In order to start shipping fuel before the average pool assembly heat generation level reaches the average level required by the cask, one has to ship colder than average assemblies and leave hotter than average assemblies behind. Thus, colder assemblies that could have been used to offset hotter assemblies in cask payloads are no longer available. This increases the average heat levels for the remaining cask payloads, which in turn requires that the remaining fuel be cooled longer before being loaded.

In the extreme case of instantaneous loading (into casks) for the entire spent fuel pool, the earliest allowable date for the instantaneous loading would be the date when the average assembly heat generation level in the pool reaches 0.75 kW or 0.353 kW, for PWR or BWR fuel, respectively. (There are other constraints related to shielding, which will be discussed later.) Roughly speaking, this (hypothetical) date will correspond to the halfway point of any real loading campaign that occurs over a finite length of time. If one had a two year campaign at a PWR plant, one could start one year before the pool-average assembly heat generation reaches the required average value of 0.75 kW, by loading somewhat colder than average fuel. This would result in finishing the loading of hotter than average fuel roughly one year after the date when the pool average assembly heat load reaches 0.75 kW. In other words, if the allowable date for instantaneous loading were 10 years after shutdown, a two year campaign would extend from 9 years to 11 years after shutdown. A four year campaign would extend from 8 to 12 years, and so on.

8.1.3.2 Calculation Methodology

For this evaluation, the number of years after shutdown at which a PWR and BWR pool could be instantaneously unloaded is determined. The time (after shutdown) required to finish the loading campaign is determined by adding a half year to that value. This corresponds to an aggressive, one year loading campaign. Each additional year required for the loading campaign pushes the completion date back half a year. (The start of the campaign is approximately 0.5 years earlier and the finish is approximately 0.5 years later.)

Examples of the calculation performed to determine the pool decay time required before an instantaneous loading could occur are presented in Table 8-1 and Table 8-2 for a PWR pool and a BWR pool, respectively. After plant shutdown, there are 16 batches of fuel in the PWR pool and 13 batches of fuel in the BWR pool, including all three (one cycle, two cycle, and three cycle) final batches that are removed from the reactor. The tables show the burnup levels and cooling times for each of the fuel batches in the pool. The age of the first (youngest) three fuel batches is equal to the specified time of loading (after shutdown). The cooling times of the other batches increase in increments of 1.5 years and 2.0 years, for the PWR and BWR pools, respectively. The burnup levels shown for the fuel batches are equal to the specified full (average) burnup level of the pool, with two exceptions. After plant shut down, one batch of fuel

will be one-cycle fuel with only 1/3 of the final burnup level. A second batch will be two-cycle fuel with 2/3 of the final burnup level.

Table 8-1. Calculation of PWR Fuel-Pool-Average Assembly Heat Generation Level at Time of Pool Unloading

Assumed Pool-Average Assembly Burnup Level =57GWd/MTU
Assumed Assembly Initial Enrichment Level = 4.625%
Time of Pool Unloading (years after plant shutdown) = 11.5 Years

Batch No.	Batch Average Burnup (GWd/MTU)	Batch Cooling Time (years)[1]	Batch Heat Generation Levels	
			kW/MTU[2]	kW/assy[3]
1	19[4]	11.5	0.527	0.248
2	38[4]	11.5	1.170	0.550
3	57	11.5	2.159	1.015
4	57	13	2.052	0.964
5	57	14.5	1.957	0.920
6	57	16	1.874	0.881
7	57	17.5	1.802	0.847
8	57	19	1.738	0.817
9	57	20.5	1.681	0.790
10	57	22	1.630	0.766
11	57	23.5	1.583	0.744
12	57	25	1.539	0.723
13	57	26.5	1.496	0.703
14	57	28	1.452	0.683
15	57	29.5	1.407	0.661
16	57	31	1.359	0.639
Average Assembly Heat Generation Level =				0.747[5]

Notes:

1. The cooling time (for core offload) Batches #1 - #3 equals the specified time (after shutdown) of the loading campaign. For the remaining batches, each subsequent batch is 1.5 years older than the last, based on a 1.5 year PWR cycle length.
2. Calculated with ORIGEN2, based on the burnup and cooling time values shown in the previous columns, and an assumed typical initial enrichment level of 4.625% (for 57 GWd/MTU fuel).
3. Equal to the kW/MTU value, times the upper-bound PWR assembly uranium loading of 0.47 MTU that is conservatively assumed.
4. Batches #1 and #2 consist of one-cycle and two-cycle fuel, respectively, and therefore have burnup levels that are 1/3 and 2/3 of the specified pool-average final burnup level of 57 GWd/MTU.
5. This is the simple average of the batch-specific assembly heat generation levels shown in the column above.

Table 8-2. Calculation of BWR Fuel-Pool-Average Assembly Heat Generation Level at Time of Pool Unloading

Assumed Pool-Average Assembly Burnup Level = 55 GWd/MTU
Assumed Assembly Initial Enrichment Level – 4.75%
Time of Pool Unloading (years after plant shutdown) – 6 Years

Batch No.	Batch Average Burnup (GWd/MTU)	Batch Cooling Time (years)[1]	Batch Heat Generation Levels	
			kW/MTU[2]	kW/assy[3]
1	18.3	6	0.657	0.131
2	36.7	6	1.508	0.302
3	55	6	2.737	0.547
4	55	8	2.423	0.485
5	55	10	2.196	0.439
6	55	12	2.035	0.407
7	55	14	1.922	0.384
8	55	16	1.838	0.368
9	55	18	1.763	0.353
10	55	20	1.678	0.336
11	55	22	1.564	0.313
12	55	24	1.402	0.280
13	55	26	1.172	0.234
Average Assembly Heat Generation Level =				0.352[5]

Notes:

1. The Batches #1- #3 cooling times equal the specified time (after shutdown) of the loading campaign. Each subsequent batch is 2.0 years older than the last, based on a 2.0 year BWR cycle length.
2. Calculated with ORIGEN2, based on the burnup and cooling time values shown in the previous columns, and an assumed typical initial enrichment level of 4.75% (for 55 GWd/MTU fuel).
3. Equal to the kW/MTU value, times the upper-bound PWR assembly uranium loading of 0.2 MTU that is conservatively assumed.
4. Batches #1 and #2 consist of one-cycle and two-cycle fuel, respectively, and therefore have burnup levels that are 1/3 and 2/3 of the specified pool-average final burnup level of 55 GWd/MTU.
5. This is the simple average of the batch-specific assembly heat generation levels shown in the column above.

The tables then present the ORIGEN2-calculated heat generation level, in kW/MTU that applies for each fuel batch. The calculations assume a typical initial enrichment level for all batches, which varies as a function of the specified final burnup level. After the kW/MTU is determined, for each batch, it is multiplied by an assumed assembly uranium loading to yield the per-assembly heat generation level for each batch. This evaluation assumes conservative (high) uranium loadings of 0.47 MTU and 0.2 MTU for PWR and BWR assemblies, respectively. Assemblies with lower uranium loadings would yield lower required cooling times, before the

pool could be unloaded, since a given allowable per-assembly heat generation level would correspond to a higher allowable per-MTU heat generation level. After the per-assembly heat generation level for each batch is determined, a simple average is taken over the batches to determine the pool average heat generation level.

PWR and BWR spent fuel pools cannot be fully unloaded, by fully-loaded 32P and 68B baskets, until the pool-average assembly heat generation levels fall to 0.75 kW and 0.353 kW, respectively. As shown in Table 8-1 and Table 8-2, this occurs 11.5 years and 6.0 years after plant shutdown, for PWR and BWR pools, respectively, based on assumed pool average burnup levels of 57 GWd/MTU and 55 GWd/MTU, for the PWR and BWR pools.

There are two constraints in addition to the limits on pool-average assembly heat generation level. In order to ensure cask exterior dose rates are within regulatory limits, the assemblies in the 20 periphery cells of the 32P basket and the 36 periphery cells of the 68B basket must have heat generation levels under 1.8 kW/MTU and 2.0 kW/MTU, respectively. That is, 62.5% of the PWR assemblies in the pool, and 53% of the BWR assemblies in the pool. Thus, at least 10 of the 16 PWR assembly batches must be under 1.8 kW/MTU, and 7 of the 13 BWR assembly batches must be under 2.0 kW/MTU. One more constraint is that none of the assembly batches may have heat generation levels over 2.0 kW/assembly for PWR fuel and 0.85kW/assembly for BWR fuel. Those heat generation levels roughly correspond to 62.5 GWd/MTU, 5 year cooled fuel, and are the peak basket cell heat generation levels analyzed in the zone-loaded basket thermal evaluations.

Therefore, in summary, the process for determining the required time (after plant shutdown) before the loading process can occur is as follows. A spreadsheet calculation like those illustrated for PWR and BWR fuel pools in Table 8-1 and Table 8-2 is performed. The time after shutdown is varied until three criteria are all met:

1. The pool-average assembly heat generation level, shown in the lower right corner of the table, must be no more than 0.75 kW/assembly for PWR fuel and 0.353 kW/assembly for BWR fuel.

2. For PWR pools, at least 10 of the 16 batch heat generation level values shown in the 4th (“kW/MTU”) column of the table must be less than 1.8 kW/MTU. For BWR pools, at least 7 of the 10 batch heat generation level values shown in the 4th (“kW/MTU) column of the table must be less than 2.0 kW/MTU.

3. None of the batch per-assembly heat generation levels shown in the 5th (“kW/assy”) column of the table may exceed 2.0 kW/assembly or 0.85 kW/assembly, for PWR and BWR fuel, respectively.

Examination of Table 8-1 and Table 8-2 show that all three criteria are met for the PWR pool and BWR pool cases that were shown, as examples, in those tables.

8.1.3.3 Evaluation Results

The procedure described in Section 8.1.3.2 is performed for a series of assumed pool-average assembly burnup levels, for both PWR and BWR assemblies. For each burnup level, a typical (close to average) initial enrichment level is assumed. The process determines the amount of

time required, after plant shutdown, before all the assemblies in the pool could be shipped in the 32P or 68B baskets, under a hypothetical instantaneous shipping campaign (where zero time is required to ship all the assemblies in the pool). As discussed in Section 8.1.3.2, those calculated times are then increased by half a year, to represent a one year time period required to unload the pool. The final results are the time, after plant shutdown, at which all the assemblies in the pool can be removed, as a function of pool-average assembly burnup level.

The results of the evaluation are shown in Table 8-3 and Table 8-4 for PWR and BWR pools, respectively. The tables show the assumed (pool average) initial enrichment level assumed for each burnup level case. Scoping analyses show that decreasing the assumed initial enrichments by approximately 0.5% would result in an increase of approximately 1 year in the required wait times, while increasing the initial enrichment by approximately 0.5% would reduce the required wait time by a similar amount.

The tables present required post shutdown wait times for an allowable total payload heat generation of 28 kW, as well as the main design-basis 24 kW. As discussed in Section 4.3.2.1, it may be possible to achieve a cask heat generation level of 28 kW. Addition of that case provides an estimate of the impact of an increased cask heat generation level on the required post-shutdown wait times.

Note that the other two requirements listed in Section 8.1.3.2 are still applied to the 28 kW cases. A higher cask heat load would not result in an increase in the allowable fuel heat generation levels (of 1.8 kW/MTU for PWR fuel and 2.0 kW/MTU for BWR fuel), as those requirements are driven by shielding considerations. In fact, whereas the limits on per-MTU heat generation are never the limiting factor for the 24 kW cask cases, they are always the limiting factor for the 28 kW cask cases.

It should be noted that the 28 kW results also correspond to the wait times that would apply for low uranium loading fuel placed in a 24 kW cask. As discussed above, the wait times calculated for the 28 kW cask case are actually governed by the (shielding related) limits of 1.8 kW/MTU for periphery cell PWR fuel and 2.0 kW/MTU for periphery cell BWR fuel. For PWR assemblies with uranium loadings of 0.417 MTU or less, the 1.8 kW/MTU limit corresponds to an overall cask heat generation level of 24 kW or less. For BWR assemblies with uranium loadings of 0.1765 MTU or less, the 2.0 kW/MTU limit corresponds to an overall cask heat generation level of 24 kW or less.

Finally, it should be noted that the evaluation results presented in Table 8-3 and Table 8-4 ignore the requirement (shown in the Table 4-4 loading specification table) that assemblies with cooling times lower than 5 years cannot be loaded. Thus, required pool unloading times less than 5 years are shown Table 8-3 and Table 8-4 for a few of the analyzed cases. If this requirement were enforced, all of the required times shown in would be increased to at least 6.0 years for all cases. (Cases for which the listed required time is over 6.0 years would not be affected.) The six year pool unloading time allows for a one-year pool unloading campaign to start five years after plant shutdown and end one year later.

Table 8-3. Time Required After Plant Shutdown to Fully Unload PWR Spent Fuel Pool

Pool-Average Assembly Burnup (GWd/MTU)	Average Assembly Enrichment (w/o U-235)	Post-Shutdown Time Required to Unload SFP (years)[1,5]	
		24 kW[2,3]	28 kW[4]
51	4.375	7.5	4.5[6]
54	4.5	9.5	6.5
57	4.625	12.0	9.0
60	4.75	14.5	12.0

Notes:

1. This is the time by which all PWR assemblies can be removed from the plant spent fuel pool, in years after plant shutdown. It is based on an aggressive cask loading schedule that removes all of the fuel pool assemblies in one year (from the time the first cask is loaded until all pool assemblies are removed). If two years are required to ship all the fuel, the required times presented above increase by 0.5 years, with another 0.5 years added for each additional year of the pool unloading campaign.
2. The required times presented in this column correspond to a cask overall payload heat generation limit of 24 kW.
3. The presented times are conservatively based on an upper-bound PWR assembly uranium loading of 0.47 MTU. Assemblies with lower uranium loadings may have lower cooling times, closer to those shown in the 28 kW column. Most PWR assemblies have uranium loadings close to the 0.47 MTU value.
4. The required times presented in this column correspond to a cask overall payload heat generation limit of 28 kW. The required times are actually governed by the (shielding related) requirement that most assemblies have fuel heat generation levels of no more than 1.8 kW/MTU. Thus, lower assembly uranium loadings would not significantly decrease the listed times.
5. The presented required times are based on the assumption that assemblies with cooling times lower than 5 years can be loaded. If the minimum cooling time of 5 years, shown in the fuel specification table (Table 4-4) is enforced, all required times are at least 6 years.
6. If the 5 year minimum cooling time requirement for all assemblies, listed in fuel specification Table 4-4, is enforced, this time requirement would increase to 6.0 years (which allows one year for the pool unloading campaign).

Table 8-4. Time Required After Plant Shutdown to Fully Unload BWR Spent Fuel Pool

Pool-Average Assembly Burnup (GWd/MTU)	Average Assembly Enrichment (w/o U-235)	Post-Shutdown Time Required to Unload SFP (years)[1]	
		24 kW[2,3]	28 kW[4]
50	4.25	4.0[5]	-
55	4.75	6.5	3.6[5]

Notes:

1. This is the time by which all BWR assemblies can be removed from the plant spent fuel pool, in years after plant shutdown. It is based on an aggressive cask loading schedule that removes all of the fuel pool assemblies in one year (from the time the first cask is loaded until all pool assemblies are removed). If two years are required to ship all the fuel, the required times presented above increase by 0.5 years, with another 0.5 years added for each additional year of the pool unloading campaign.
2. The required times presented in this column correspond to a cask overall payload heat generation limit of 24 kW.
3. The presented times are conservatively based on an upper-bound PWR assembly uranium loading of 0.2 MTU. Assemblies with lower uranium loadings may have lower cooling times, closer to those shown in the 28 kW column. Most BWR assemblies have uranium loadings closer to the 0.2 MTU value.
4. The required times presented in this column correspond to a cask overall payload heat generation limit of 28 kW. The required times are actually governed by the (shielding related) requirement that most assemblies have fuel heat generation levels of no more than 2.0 kW/MTU. Thus, lower assembly uranium loadings would not significantly decrease the listed times.
5. If the 5 year minimum cooling time requirement for all assemblies, listed in fuel specification Table 4-4, is enforced, these time requirements would increase to 6.0 years (which allows one year for the pool unloading campaign).

8.1.3.4 Evaluation Conclusions

The Table 8-3 and Table 8-4 results show that the time required, after plant shutdown, to completely unload the spent fuel pool using the 32P or 68B baskets/casks, is sensitive to the inventory-average burnup level of the assemblies in the pool. The results also show that increasing the cask's allowable payload heat generation level to 28 kW significantly reduces the required times. Finally, the required times are significantly shorter for BWR fuel than they are for PWR fuel. This is largely due to the fact that the maximum total uranium loading in the 68B basket (13.6 MTU) is lower than the total uranium loading present in the 32P basket (15.0 MTU). Required times could be reduced significantly by only partially loading the casks, at the expense of increased shipments. This is discussed further in section 8.1.3.6.

It is unlikely that the pool-average PWR assembly burnup level will exceed 57 GWd/MTU, even many years into the future. The value may be closer to 54 GWd/MTU. Thus, it is likely that the time required to unload the pool of shutdown plant would be approximately 10 years or less, after shutdown. Increasing the cask allowable heat load to 28 kW would reduce the required time to approximately 7 years or less. It is unlikely that the pool-average assembly burnup level for BWR fuel will be as high as 55 GWd/MTU. It will more likely be closer to 50 GWd/MTU.

Thus, even with a 24 kW cask, most BWR spent fuel pools could be unloaded less than 5 years after plant shutdown (or 6 years, if the 5 year minimum cooling time requirements is enforced).

8.1.3.5 Potential Benefits of Dry Storage

The evaluations in the previous sections assume that the PWR and BWR spent fuel pools have the youngest batches possible in the pool. That is, either dry storage was never employed, or if dry storage was employed it was used to remove the oldest, coldest fuel assemblies from the pool, as necessary. In other words, it was conservatively assumed that dry storage was used the same way that the proposed transport casks were used in the operating plant evaluation presented in Section 8.1.2. If the fuel pool was likened to a conveyer belt, the (oldest) assemblies that "fall off the conveyer belt" are loaded into dry storage. Such an assumption is appropriate for the previous evaluations, as some plants do use a philosophy of loading the coldest assemblies into dry storage.

However, dry storage could be used to significantly reduce the required post-shutdown times shown in Table 8-3 (for PWR fuel). The reason for this is that dry storage systems have allowable heat loads of approximately 32-36 kW, which is much higher than the 24 kW allowed by the proposed transport cask. Thus, loading younger, hotter fuel assemblies into dry storage could reduce the average heat generation levels of assemblies remaining in the pool, and reduce the post-shutdown cooling time required before the pool unloading campaign (using DOE transport casks) can begin.

There are too many variables to evaluate, within the scope of this report, all the ways that dry storage, and its higher allowable heat loads, could be used to reduce the required cooling times. Therefore, one example of how dry storage could affect the (post-shutdown) date at which the unloading campaign could begin is presented in this section. In this example case, the hottest (as opposed to coldest) possible assemblies are loaded into the dry storage system. Thus, this evaluation will provide an upper bound estimate as to how much the use of dry storage could reduce the required wait time.

The example evaluation, for PWR fuel, is presented in Table 8-5. The example is based on the assumption that instead of placing the oldest batch of (21 year cooled) assemblies into dry storage, assemblies are placed into dry storage when their cooling time reaches nine years. For 57 GWd/MTU, 4.625% initial enriched, 9 year cooled PWR assemblies with an upper-bound uranium loading of 0.47 MTU, the heat generation level is 1.115 kW/assembly. For a dry storage system with a capacity of 32 assemblies, that corresponds to a total payload heat generation level of 35.7 kW.

It is assumed that dry storage, and the above approach continues to be used while the plant continues to operate. The pool is initially allowed to fill up completely before dry storage begins. Thus, the pool contains 14 batches, i.e., 21 years-worth of fuel, when 9 year cooled fuel starts to be loaded into dry storage. At the time when dry storage starts, 7 of the 14 batches of PWR fuel in the pool will have cooling times ranging from zero to 9 years. The remaining 9 batches of fuel will have cooling times in excess of 9 years. As the plant continues to operate, and nine year fuel is continuously taken out of the pool and placed into dry storage, the older 7 batches of fuel are allowed to stay in the pool and continue to age. These fuel batches will

provide very cold fuel that can be placed into the DOE transport casks during the pool unloading campaign.

It is assumed that dry storage starts after the 21st year of (PWR) plant operation, when the spent fuel pool is full. It is then assumed that the plant continues to operate for 36 more years (for a total life of 60 years) before it is shutdown. At the time of shutdown, there will be 9 batches of fuel with cooling times ranging from 0 to 9 years (three batches having a cooling time of 0 years). However, due to the 36 years of operation where the oldest 7 batches of fuel were allowed to age in the pool, the cooling times of those oldest 7 batches range from 46.5 years to 58.5 years, at the time of plant shutdown. At the beginning of dry storage, the youngest of those 7 batches had a cooling time of 10.5 years (1.5 years more than the age of the batch that was initially placed into dry storage).

Due to the very high cooling time that exists for 7 of the 16 batches of PWR fuel present in the pool, the DOE cask loading campaign can start much sooner. As shown in Table 8-5, an instantaneous loading campaign could occur 8.5 years after plant shutdown. Assuming a one year campaign, the pool could be unloaded 9.0 years after plant shutdown.

Note that, as shown in Table 8-5, the pool-average assembly heat load is actually only 0.67 kW (vs. the allowable value of 0.75 kW). The wait time is actually governed by the requirement that 10 of the 16 assembly batches have fuel heat generation levels of no more than 1.8 kW/MTU. In fact, given that only 7 batches are very old, and two batches (the one and two cycle fuel) have low burnup levels, 7 of the 16 batches are full burnup and are unaffected by the use of dry storage. Thus, dry storage does not help with respect to meeting the requirement that 10 of 16 batches have fuel heat generation levels under 1.8 kW/MTU. As a result, all dry storage does is provide relief from the overall cask heat load requirement. The shielding requirements become limiting (as they are in the 28 kW cask case). This results in the same required time (before the pool can be fully unloaded) that was calculated, and shown in Table 8-3, for the 28 kW case, i.e., 9.0 years.

For similar reasons, the required wait times for other burnup levels, in a case where the hottest possible assemblies are placed into dry storage, will also be similar to those shown for those burnup levels in the 28 kW column of Table 8-3. Similar results are likely to occur for BWR pools.

In summary, this evaluation shows that the best possible use of dry storage (where the hottest possible assemblies are loaded into dry storage), could reduce the required time, after plant shutdown, to fully unload the spent fuel pool from 12 years to 9 years, assuming a pool-average assembly burnup level of 57 GWd/MTU. The benefit is very similar to that which would occur from increasing the cask's heat generation limit from 24 kW to 28 kW. The plant owner's philosophy with respect to what assemblies are loaded into dry storage will significantly affect the level of benefit (i.e., amount of decrease in the required post-shutdown time). In most cases, the effect of dry storage will be less than that estimated here.

Table 8-5. Upper-Bound Estimate of Dry Storage Impact on Time to Unload Pool PWR

PWR Spent Fuel Configuration 3.5 Years After Plant Shutdown
60 Years of Operation- Dry Storage Used Over Last 36 Years
Oldest Seven (of 16) Batches Left to Age 36 Additional Years in Pool

Batch No.	Batch Average Burnup (GWd/MTU)	Batch Cooling Time (years)[1]	Batch Heat Generation Levels	
			kW/MTU[2]	kW/assy[2]
1	19[2]	8.5	0.639	0.3001
2	38[2]	8.5	1.420	0.667
3	57	8.5	2.622	1.232
4	57	10	2.280	1.072
5	57	11.5	2.158	1.014
6	57	13	2.050	0.964
7	57	14.5	1.956	0.919
8	57	16	1.873	0.880
9	57	17.5	1.800	0.846
10	57	55[3]	0.918	0.431
11	57	56.5	0.898	0.422
12	57	58	0.878	0.413
13	57	59.5	0.860	0.404
14	57	61	0.841	0.395
15	57	62.5	0.824	0.387
16	57	64	0.806	0.379
Average Assembly Heat Generation Level =				0.670[2]

Notes:

1. The Batch #1 - #3 cooling times equal the specified time (after shutdown) of the loading campaign. Each subsequent batch is 1.5 years older than the last, based on a 1.5 year PWR cycle length. After accounting for a loading campaign length of one year, the time required, after shutdown, to fully unload the spent fuel pool is 4 years.
2. Refer to Table 8-1 notes.
3. This cooling time is 37.5 years longer than that of the previous batch. It is equal to the 1.5 year cooling time difference between batches, plus the 36 years of additional time that the oldest nine batches of fuel resided in the spent fuel pool while younger fuel batches were placed into dry storage.

8.1.3.6 Effects of Using Partially Loaded Casks

The evaluations presented in the previous sub-sections are based upon a requirement that all casks be fully loaded. That is, they are based on the assumption that DOE would not partially load casks, and increase the number of shipments, in order to reduce the amount of time required (after plant shutdown) to remove all the fuel assemblies from the plant spent fuel pool. In this sub-section, the use of partially loaded casks is evaluated.

For this evaluation, it is assumed that the cask loading campaign begins five years after plant shutdown, and concludes approximately 1 year later. (That is, it is assumed that the 5 year minimum cooling time requirement shown in fuel specification Table 4-4 is enforced.) Casks are partially loaded, as necessary, in order to allow this. This will require some, but not all, casks to be partially loaded. The objective of this evaluation is to estimate the degree of partial loading, i.e., the percentage increase in the number of shipments, which would be necessary in order to empty the plant spent fuel pool 5 years after plant shutdown.

The heat generation levels of each batch of PWR fuel, 5 years after plant shutdown, are determined using an evaluation similar to that presented in Table 8-1. If the average burnup level for fully-burned (3 cycle) PWR assemblies in the spent fuel pool is assumed to be 57 GWd/MTU, the average heat generation level of all the assemblies in a typical PWR spent fuel pool would be close to 0.94 kW/assembly five years after plant shutdown, for the most common PWR assembly types (e.g., W 15×15, W 17×17 and B&W 15×15). Thus, a ~20% cask capacity reduction would result in a total cask heat generation level of 24 kW for those average assemblies.

Steel dummy blocks would be placed in those 20% of the cask cells (all of which would be basket periphery cells). Examination of the data shows that there will be just enough dummy blocks or assemblies with less than 1.8 kW/MTU of heat generation to fill the 20 periphery slots of all the 32P baskets.

Thus, it is concluded that if the pool-average PWR assembly burnup level is approximately 57 GWd/MTU, a PWR spent fuel pool could be completely emptied approximately 5 years after plant shutdown if the average cask capacity is reduced by approximately 20%. Thus, the number of shipments would have to increase by approximately 25%, over the number of shipments required if the pool were emptied approximately 12 years after plant shutdown. Similar evaluations show that the required average cask capacity reductions would be approximately 14% and approximately 30% for pool-average PWR assembly burnup levels of 54 GWd/MTU and 60 GWd/MTU, respectively. That corresponds to increases in the numbers of shipments of approximately 19% and approximately 43%, respectively.

For BWR fuel, if the spent fuel pool average burnup level were 55 GWd/MTU, the time required to fully unload the pool could be reduced to approximately 5 years (from 6.5 years) by reducing the average cask payload capacity by only approximately 5%, which results in a approximately 5% increase in the number of shipments.

9 REGULATORY COMPLIANCE

9.1 APPLICABLE REQUIREMENTS

The Statement of Work for Task Order 17 requires that the SNF transportation cask design considered in this study must ultimately be licensable; that is, there is should be reasonable assurance that the design could be approved and certified by the NRC.

The NRC regulation governing the review and approval of a SNF transportation cask design is 10 CFR Part 71 - Packaging and Transportation of Radioactive Material. The primary goal and objective of NRC's Part 71 transportation regulations are to:

- Prevent the loss of radioactive contents
- Provide shielding and heat dissipation
- Prevent nuclear criticality (maintain sub-criticality)

Part 71 sets forth very specific requirements for the content of an application for NRC review and approval of a transportation package including:

- Detailed description of the package and the design, including materials of design
- Evaluation of the package demonstrating that the package successfully satisfies the routine, normal and accident conditions of transport. The application is required to identify any unique or limiting controls for use of the package considering for example, radiation levels and criticality considerations
- Quality assurance program description, or reference to a previously approved quality assurance program
- Operating controls and procedures for use of the package

Guidance to assist in the preparation of a spent fuel transport application is provided in two NRC general guidance documents, and is supplemented by additional Interim Staff Guidance (ISG) documents, which are listed below:

- NRC Regulatory Guide (RG) 7.9 - *Standard Format and Content of Part 71 Applications for Approval of Packages for Radioactive Material*
- NRC NUREG–1617 - *Standard Review Plan (SRP) for Transportation Packages for Spent Nuclear Fuel*
- ISG-1 - *Classifying the Condition of Spent Nuclear Fuel for Interim Storage and Transportation Based on Function (formerly entitled "Damaged Fuel")*
- ISG-7 - P*otential Generic Issue Concerning Cask Heat Transfer in a Transportation Accident*
- ISG-8 - *Burnup Credit in the Criticality Safety Analyses of PWR Spent Fuel in Transportation and Storage Casks*

- ISG-11 - *Cladding Considerations in the Transportation and Storage of Spent Fuel*
- ISG-15 - *Materials Evaluation*
- ISG-19 - *Moderator Exclusion Under Hypothetical Accident Conditions and Demonstrating Subcriticality of Spent Fuel Under the Requirements of 10 CFR 71.55 (e)*
- ISG-21 - *Use of Computational Modeling Software*
- ISG-22 - *Potential Rod Splitting Due to Exposure to an Oxidizing Atmosphere During Short-Term Cask Loading Operations in LWR or Other Uranium Oxide Based Fuel*
- ISG-23 - *Application of ASTM Standard Practice C1671-07 When Performing Technical Reviews of Spent Fuel Storage and Transportation Packaging Licensing Actions*

The topic of transport of high burn-up fuel is presently under much study and analysis by both the NRC and the industry. ISG-11, listed above, is currently applicable to spent fuel storage, but is included in the list for transport cask design consideration with regard to cladding temperature limits at time of cask loading. The NRC review of transport applications for high burn-up fuel is presently conducted on a case-by-case review basis. The NRC has recently approved two applications for transport of high burn-up fuel (Holtec Hi-Star 180 and NUHOMS 197HB), For the two cases, the applicants were able to demonstrate and justify the acceptability of their assumptions on possible high burn-up fuel reconfiguration and the ability to maintain subcriticality. Further development of NRC's review guidance for transport of high burn-up fuel is anticipated over the next few years. At the time of license application, the applicant for the transportation cask design considered in this report will need to confirm that the application is consistent with the then current NRC guidance on transport of high burn-up fuel.

Final NRC approval of an application for a transportation package is documented in a CoC. The CoC is typically issued for a five year effective or valid term.

An additional requirement in the Task Order 17 Statement of Work is that the SNF transportation cask design must not exceed the maximum width restriction of 128 inches as specified in the AAR Standard, S-2043, *Performance Specification for Trains Used to Carry High Level Radioactive Materials.*

9.2 DOE GUIDANCE ON CASK DESIGN SPECIFICATIONS AND ASSUMPTIONS

DOE provided very specific design considerations for the SNF transportation cask design. The transportation cask must be a reusable rail cask optimized for transport of directly loaded bare PWR and BWR spent fuel. The design is also to include a cask design optimized for transport of PWR and BWR DFCs in all fuel basket positions. The transportation cask design should accommodate high burnup fuel with an average assembly burnup of up to 62.5 GWd/MT with up to 5% initial enriched fuel and 5-year cooled fuel.

Recognizing that crane capacity varies at nuclear power plants, DOE provided cask design guidance that the crane hook weight for lifting the loaded transportation cask in the spent fuel pool should be limited to 125 tons. The weight limit for the transportation cask includes the

transportation cask and closure lids but does not include impact limiters. Because some reactor facilities may have lower crane capacity limits (i.e., less than 125 tons), DOE asked that a scoping analysis be conducted of possible alternative cask and internal basket designs/configurations (e.g., lower capacity) that would satisfy a crane hook weight limit of 100 tons.

Initially DOE provided a design consideration and assumption that all high burnup intact fuel (i.e., up to 62.5 GWd/MT) would maintain its integrity under both normal and hypothetical accident conditions and tests as required under 10 CFR Part 71. That is, the high burnup fuel would not reconfigure, but maintain its as-loaded configuration when subjected to the hypothetical accident condition tests (drop, puncture, fire, and submersion). This DOE guidance was a significant simplifying assumption for the cask design including criticality, shielding and thermal analyses.

Subsequently DOE also requested that spent fuel reconfiguration assumptions be analyzed for intact high burnup fuel in DFCs with fuel pin spacing optimized with cladding on, within the basket cells (with burnup credit-based isotopics). DOE further stated that bounding analyses could be conducted as appropriate to envelope cases, thereby limiting the number of analyses. In addition, DOE suggested an analysis for a hybrid cask concept with bare intact reconfigured spent fuel, not in DFCs, in central locations, and a few locations for DFCs for truly damaged fuel around the periphery to provide information on how cask attributes are expected to vary as the number of assemblies in DFCs is varied. The analyses of the different fuel loading and reconfiguration scenarios will provide very useful information to DOE on cask performance attributes. However, the application to the NRC including all or a subset of the fuel condition accident assumptions will need to justify the basis for each assumption.

9.3 CASK DESIGN CONSIDERATIONS

The Team selected a currently NRC certified transportation package, the NAC STC, to use as the basis for designing the SNF transportation cask requested in Task Order 17. The NAC STC transportation cask (NRC CoC No. 9235) has one configuration that is a directly loaded bare fuel cask capable of holding up to 26 PWR assemblies. The fully loaded NAC STC with bare spent fuel and without impact limiters weighs approximately 116 tons.

There were many advantages for the Team in selecting the NAC STC to serve as the base for developing the SNF transportation cask. The general size, weights, and materials of design of a currently NRC certified package design could be carried forward to the new design. As discussed below in section 9.4, many of the design parameters of the SNF transportation cask design will be similar to previous NRC approved designs and should facilitate future NRC review of the new SNF transportation cask design. The materials, geometry and construction of the transportation cask design are typical of that implemented in the spent fuel transportation industry today. With the exception of the neutron shield design, the transportation cask design resembles that of the NAC MAGNATRAN Part 71 application which is presently under NRC review.

The DFCs designed for use in the SNF transportation cask are similar to the DFCs used in the currently NRC certified NAC MAGNASTOR Part 72 (NRC CoC No. 1031). As noted above,

the NRC is presently reviewing the NAC MAGNATRAN Part 71 transport application which also includes a similar DFC design.

The Team's basket designs have a maximum capacity of 32 PWR bare loaded intact assemblies and 68 BWR bare loaded intact assemblies. The design capacity for loading DFCs in each basket location has a smaller capacity of 28 PWR assemblies and 61 BWR assemblies. The associated heat load for all the basket designs is approximately 24 Kw.

The Team's cask and basket design will make use of NRC Interim Staff Guidance, ISG-8 Rev 3 for burnup credit. ISG-8 Rev 3 was issued by NRC more than two years ago and has been previously used by the industry in applications to the NRC. Moderator exclusion (ISG-19) was not required for the SNF transportation cask design considered in this report.

However, if moderator exclusion is necessary to ensure that subcriticality would be maintained, redesign of the transportation cask may be required to address the Interim Staff Guidance on moderator exclusion provided in ISG-19. Further, the cask redesign for moderator exclusion would probably include a second closure lid to prevent moderator ingress. The additional lid would add weight to the transportation cask body which may have additional consequences on other design parameters including cask capacity.

9.4 NRC REVIEW CONSIDERATIONS

A new application for a spent fuel transportation cask design as presented in this report would typically be considered by the NRC to involve multiple technical review disciplines requiring approximately two-years of staff review time. The review will involve multiple technical disciplines including structural, materials, thermal, shielding, and criticality. The estimate of NRC review time includes time for the initial review of the application and time for NRC review of applicant responses to requests for additional information. The estimate does not include the time for the applicant to review and respond to NRC requests for additional information.

There are a number of design considerations for the Team's proposed SNF transportation cask that should help facilitate the NRC review. As noted in Section 9.3, the NRC review should be facilitated by the Team's use of design parameters and considerations that were previously reviewed by NRC for the NAC STC transport package, and are very similar to the NAC MAGNATRAN Part 71 application presently under NRC review. Further use of NRC approved technical positions as presented in the NRC Standard Review Plan and in NRC Interim Staff Guidance documents should also facilitate the review. The SNF transportation cask design assumes moderator ingress; therefore, the design does not require consideration or use of ISG-19 for moderator exclusion. The Team does make use of ISG-8 Rev 3 for burn-up credit. ISG-8 Rev 3 has previously been used in applications approved by NRC. Further, the damaged fuel can design is similar to a DFC design used in a previously certified Part 72 storage certificate and similar to a design that is currently under review for a Part 71 transportation certificate.

In addition, there are cask design considerations that do not push or challenge the margins of previously NRC approved designs and these considerations should also facilitate the NRC review. Examples include:

- Lower capacity of 32 PWR and 68 BWR assemblies compared to NRC certified transportation packages with 37 PWR and 69 BWR assemblies.
- Lower heat load of approximately 24 Kw compared to NRC certified transportation packages with 32 Kw or higher heat load.
- The cask design does not present any new or novel design features.
- The cask design does not introduce any new technical issues.

The NRC has in place the regulatory framework to conduct the review of a spent fuel transport application. Collectively these considerations should support the applicant's demonstration of acceptability of design and facilitate the NRC review.

The impact limiters have materials of composition different from the NAC STC certified design and the NAC MAGNATRAN Part 71 application presently under NRC review, so applicant testing and/or modeling and analysis would be necessary to demonstrate acceptability.

The topic of transport of high burn-up fuel is presently under much study and analysis by both the NRC and the industry. Further development of NRC's review guidance for transport of high burn-up fuel is anticipated over the next few years. The applicant will need to confirm that the application is consistent with the then current NRC guidance on transport of high burn-up fuel. The applicant should anticipate that the technical basis and the assumptions for transport of high burn-up fuel will receive close NRC scrutiny. Depending on the status of the NRC and industry studies at the time of the application, perhaps further study/supporting analysis may be necessary to justify the technical basis and assumptions for transport of high burn-up fuel.

9.5 REGULATORY CONCLUSION

The applicant for the SNF transportation cask design developed by the Team under Task Order 17 should anticipate a detailed NRC review involving multiple technical disciplines requiring approximately two-years of staff review time. However, the NRC review should be facilitated in that: 1) the design does not present any new or novel design features, 2) the design does not introduce any new technical issues, 3) the design is very similar to cask designs previously approved by the NRC and to cask designs currently under NRC review, 4) the design considerations do not push the margins of previously reviewed/certified designs such as cask heat load and capacity, and 5) the regulatory framework is in place to review the design.

Testing and/or modeling analysis would be necessary to demonstrate the acceptability of the SNF transportation package including the newly designed impact limiters. The applicant will also need to confirm that the application is consistent with the then current NRC guidance on transport of high burn-up fuel. The applicant should anticipate that accident testing and analysis and the technical basis and assumptions for transport of high burn-up fuel will receive close NRC scrutiny.

Based on the considerations summarized above and successful outcomes on the accident testing and/or modeling of the transportation cask with impact limiters, and of the analysis and review of the design assumptions, NRC approval of the SNF transportation cask design would be anticipated.

10 COST ESTIMATE

The Cost Estimate section is divided into five subsections that address the requirements in the statement of work as follows:

1. Up-front Costs associated with the design, analysis, testing, and licensing of the cask , and the acquisition cost of a cask prototype, if this is required;
2. Cask System Acquisition Costs, including the cost to fabricate the entire transportation cask system, and unit costs as a function of the number of casks produced;
3. Cask Handling Equipment Costs at the shipping and receiving sites;
4. Cask Loading and Unloading Costs at the shipping and receiving sites; and
5. Cask Inspection, Maintenance and Refurbishment Costs.

Costs for each of the six cask and basket combinations identified in this report are shown under Cask System Acquisition Costs (Subsection 10.2) and Cask Loading and Unloading Costs at the shipping and receiving sites (Subsection 10.4). The remaining subsections do not divide costs as such, since either the costs provided apply to all cask and basket combinations, or there is little difference in these costs for one combination versus another.

Also, selected unit costs are included as part of a template that was provided by DOE in post-award question & answer activities. These costs are shown in Appendix H. Further, cost data templates provided in Appendix G include bases of estimates for costed items where appropriate.

10.1 UP-FRONT COST

The Up-front Costs estimate is provided in Table 10-1, with additional detail shown in Appendix G. The estimate depicts number of staff and costs by phase (i.e., Design, Analysis, Testing and Licensing). Staffing costs are provided for the Licensee as well as for the NRC. Acquisition costs are provided for the cask prototype. It is assumed that one CoC will cover the two casks, i.e., the Long 182” length and the Short 174” length) and the six baskets (i.e., 32P Intact, 28P DFC, 68B Intact, 61B DFC, 32P Intact (short), and 28P DFC (short)).

The columns of Table 10-1 show the staff types, including Engineer – Nuclear, Engineer – Structural, Engineer – Materials, Project Manager, and Other Staff. The data in the rows below include, for each phase and participant type, the staff FTEs dedicated to the effort and the total estimated costs for each staff member. FTE and dollar amounts are then totaled in the rightmost column of the table.

For the design and analysis phases, the FTEs equate to approximately six months of effort for each staff member. For testing and for licensing on the contractor/licensee side, about three months of effort is assumed for each staff member; and for licensing on the NRC side, roughly four months of effort is assumed per staff member. The latter includes approximately six staff in total, including a Project Manager, Structural Reviewer, Materials Reviewer, Shielding Reviewer, Thermal Reviewer, and Criticality Reviewer. Shielding, Thermal and Criticality

Reviewers are aggregated under the Engineer – Nuclear category, and the five reviewers in total correspond to the required reviews per 10 CFR 71 and NUREG 1617.

Table 10-1 also includes an estimate for acquisition of a cask prototype for testing or demonstration purposes. This includes the cost of the cask, one basket, and one set of ancillary equipment (i.e., impact limiters, and skid). A rough order of magnitude estimate for the NAC STC is used as a proxy for the casks defined within this report.

In addition, contingency at 30%, consistent with that used in DOE budget or preliminary estimates, is applied to all costs, with the exception that a 20% contingency is applied to the cask prototype. Dollar figures are shown in current year 2015 dollars.

A final note in this section is that effort shown in the table or time spent is estimated based on an overall timeline. This timeline would include, at a high level, 12-18 months for Design and Analysis (i.e., develop the SAR), 18-24 months to fabricate the initial cask and complete testing (i.e., submit the SAR), and roughly 24 months for NRC to conduct their review (i.e., issue the Safety Evaluation Report).

10.2 CASK SYSTEM ACQUISITION COSTS

This section addresses cask system acquisition costs, including the cost to fabricate the entire transportation cask system, as well as unit costs as a function of the number of casks produced.

Table 10-2 depicts cask system acquisition costs for each of the six cask/basket combinations. The cost detail in the table includes the cask cost in the first column and the basket, DFC, and ancillary equipment costs in the next three columns. As a basis, the Long 182″ 32P Intact cask-basket combination, which is capable of handling up to 8 DFCs, is derived from the NAC STC cask as a proxy and assumes a 45-55 split for the cask versus basket costs. This split is based on the fact that, given that our source data include combined cask-basket costs, the basket would be relatively more expensive due to a more labor-intense and intricate fabrication process. Further, DFC costs are estimated at $10,000 per BWR DFC, and this is scaled for each PWR DFC in accordance with their greater inside dimension.

Moving to the remaining five cask-basket combinations in Table 10-2, the following adjustments have been made:

1. Number of DFCs (as estimated for BWR or PWR as appropriate);
2. Ability to accommodate all DFCs (added 10% to the cost of the basket);
3. Number of assemblies (scaled the basket up or down as appropriate); and
4. Cask length (scaled the cask and basket down as appropriate).

Table 10-1. Up-Front Costs by Phase and Staff/Acquisition Type

Current Year (2015 $)	Engineer - Nuclear		Engineer - Structural		Engineer - Materials		Project Manager		Other Staff		Total Staff	Total Costs
	FTE	Total	FTE	Total	FTE	Total	FTE	Total	FTE	Total	FTE	$
Up-Front Costs												
Design												
Licensee	1.00	$ 376,000	1.00	$ 376,000	0.50	$ 188,000	0.50	$ 211,500	0.50	$ 70,500	3.50	$ 1,222,000
Analysis												
Licensee	0.50	$ 188,000	0.50	$ 188,000	0.50	$ 188,000	0.50	$ 211,500	0.50	$ 70,500	2.50	$ 846,000
Testing												
Licensee	0.25	$ 94,000	0.25	$ 94,000	0.25	$ 94,000	0.25	$ 105,750	0.25	$ 35,250	1.25	$ 423,000
Licensing												
NRC	1.00	$ 524,520	0.33	$ 174,840	0.33	$ 174,840	0.33	$ 174,840	0.00	$ 0	2.00	$ 1,049,040
NRC Contractor	0.25	$ 94,000	0.25	$ 94,000	0.25	$ 94,000	0.25	$ 94,000	0.00	$ 0	1.00	$ 376,000
Licensee – O&A	0.25	$ 94,000	0.25	$ 94,000	0.25	$ 94,000	0.25	$ 94,000	0.25	$ 35,250	1.25	$ 411,250
Sub-Total Staff											11.50	$ 4,327,290
Cask Prototype												$ 7,211,736
Contingency (20% cask 30% other)												$ 2,740,534
Total Up-Front Costs												$ 14,279,560

Table 10-2. Cask System Acquisition Costs

Cost Element (costs in current year 2015 $)	Cask	Basket	DFCs	Ancillary Equipment	Contingency @ 20%	Total ($)
Cask System						
Long 182″ Cask, PWR, 32 Intact (up to 8 DFCs)	$1,585,299	$1,937,588	$121,026	$2,125,476	$1,153,878	$6,923,267
Long 182″ Cask, PWR, 28 DFC	$1,585,299	$2,131,347	$423,590	$2,125,476	$1,253,142	$7,518,854
Long 182″ Cask, BWR, 68 Intact (up to 8 DFCs)	$1,585,299	$3,027,482	$80,000	$2,125,476	$1,363,651	$8,181,908
Long 182″ Cask, BWR, 61 DFC	$1,585,299	$3,387,319	$610,000	$2,125,476	$1,541,619	$9,249,713
Short 174″ Cask, PWR 32 Intact (up to 8 DFCs)	$1,515,616	$1,830,243	$115,602	$2,125,476	$1,117,387	$6,704,323
Short 174″ Cask, PWR 28 DFC	$1,515,616	$2,013,267	$404,605	$2,125,476	1,211,793	$ 7,270,756

In addition, Table 10-2 provides total Ancillary Equipment costs, which are the same for each of the six cask-basket combinations. Ancillary equipment includes Impact Limiters, and a Mounting Skid. Finally, the total estimated cost for each cask-basket combination is shown in the rightmost column.

One final aspect of Cask System Acquisition Cost is that these costs are based on data obtained in 2006 and have been grossed up to 2015 dollars using a 3 percent per year escalation rate based on information obtained from DOE guidance for the nuclear category.

Further detail on the costs from Table 10-2, as well as specific data sources and specifications, are provided in Table 10-3 and in Appendix G, Table G-2.

To address unit costs as a function of the number of casks produced, the cask costs provided in Table 10-2 and Table 10-3 are not for a prototype or the first cask produced but instead depict cask system costs once production has been up and running and is in a more-or-less steady state. The learning curve effect is provided in Table 10-4. This table depicts unit costs for the initial cost of the cask system versus the full-up production cost. As the table shows, there is a 25% increase in the total cask system cost to produce the initial cask. This penalty is based on considerations of industry studies, and engineering judgment of the time it would take to produce the first cask system versus follow-on units. This initial cask production penalty is somewhat lower than one might expect due to the fact that our recommendations are bound to existing technologies that are already being utilized.

Table 10-3. Cask, Basket, and DFC Acquisition Component Costs

COST ELEMENT (costs in current year 2015 $)	QUANTITY	UNIT COST ($)	Contingency @ 20% (per unit)	TOTAL (all units) ($)
Casks				
Long 182″ Cask	1	$ 1,585,299	$ 317,060	$ 1,902,359
Short 174″ Cask	1	$ 1,515,616	$ 303,123	$ 1,818,739
Cask Internals (Baskets, DFCs, etc)				
Long 182″ Cask (PWR)				
32P	1	$ 1,937,588	$ 387,518	$ 2,325,106
DFC (up to 8)	8	$ 15,128	$ 3,026	$145,231
28P (DFC)	1	$ 2,131,347	$ 426,269	$ 2,557,616
DFC (28)	28	$ 15,128	$3,026	$ 508,308
Long 182″ Cask (BWR)				
68B	1	$ 3,027,482	$ 605,496	$ 3,632,978
DFC (up to 8)	8	$ 10,000	$2,000	$ 96,000
61B	1	$ 3,387,319	$ 677,464	$ 4,064,783
DFC (61)	61	$ 10,000	$ 2,000	$ 732,000
Short 174″ Cask (PWR)				
32P	1	$ 1,830,243	$ 366,049	$ 2,196,291
DFC (up to 8)	8	$ 14,450	$ 2,890	$ 138,722
28P (DFC)	1	$ 2,013,267	$ 402,653	$ 2,415,920
DFC (28)	28	$ 14,450	$ 2,890	$ 485,526

Table 10-4. Cask Unit Costs – Initial and Full-up Production

Cost Element (costs in current year 2015 $)	Quantity	Unit Cost ($)	Contingency @ 20%	Total Cost ($)	Notes/Comments
Unit Costs					
Cask Purchase (Initial) (Long 182″ Cask, PWR, 32 Intact (up to 8 DFCs))	1	$ 7,211,736	$ 1,442,347	$ 8,654,083	First cask total cost based on NAC STC for Cask and on an average for impact limiters and skid (or trailer), grossed up by 25% for initial item; percentages gross-up based on schedule evaluations and industry studies
Cask Purchase (Full-up Production) (Long 182″ Cask, PWR, 32 Intact (up to 8 DFCs))	1	$ 5,769,389	$ 1,153,878	$6,923,267	First cask total cost; based on NAC STC for Cask and on an average for impact limiters and skid (or trailer)

10.3 CASK HANDLING EQUIPMENT COSTS

Our estimate of Cask Handling Equipment Costs at the shipping and receiving sites is provided in Table 10-5. These costs include the cask transport vehicle. These costs also include other equipment, i.e., lifting yokes, lift trunnions, leak test equipment, vacuum drying equipment (shipping site), and other equipment.

Table 10-5. Handling Equipment Costs

Cost Element (costs in current year 2015 $)	Quantity	Unit Cost ($)	Contingency @ 20%	Total Cost ($)
Cask Handling Equipment				
Shipping Site				
Transport Vehicle	1	$ 3,914,320	$ 782,864	$ 4,697,183
Other Equipment	1	$ 800,107	$ 160,021	$ 960,128
Receiving Site				
Transport Vehicle	1	3,914,320	$ 782,864	$ 4,697,183
Other Equipment	1	$ 646,523	$ 129,305	$ 775,828

For the purposes of this cost exercise, the shipping site is assumed to be a utility site, and the receiving site is assumed to be a potential CSF with wet and dry storage capabilities.

10.4 CASK LOADING AND UNLOADING COSTS

This subsection addresses Cask Loading and Cask Unloading Costs at the shipping and receiving sites. Figure 10-1 depicts the high-level steps in the Cask Loading process at a utility site:

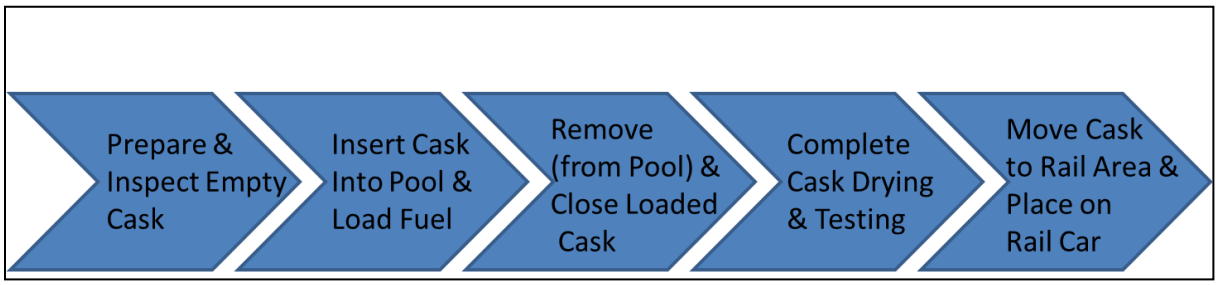

Figure 10-1. Cask Loading Process High-Level Steps

Table 10-6 and Table G-3 (in Appendix G) provide further detail and insights into this process. Table 10-6 depicts the above steps as well as the lower-level activities in this process. The table shows the activities, the total personnel, their durations and cumulative durations, and their total staff cost. The process is derived from the process shown in in Table 5-2, which was in turn derived from bare fuel cask loading operations at Peach Bottom. Further, Table 10-6 depicts the

TN-68, which is the cask that is loaded at Peach Bottom, as the base case proxy for the Long 182″ Cask – 68B Intact.

In addition, each activity in Table 10-6 is coded green, yellow or red, depending on whether the execution risk is deemed to be Low, Moderate or High. As this is an established, recurring process governed by procedures, no activities are coded as red.

Table 10-6 also calculates Other Costs (Consumables – assumed to be 50% of total costs to that point), Total Costs for one Cask, and Total Costs for a "Campaign," which consists of loading four casks onto one train. The Campaign Costs do not currently include Mobilization and Demobilization costs, but Appendix H includes these costs at a high level.

Finally, Table G-3 in Appendix G provides further insight into Cask Loading Costs at the utility, showing how these costs were derived and/or estimated. Data provided include Staff Type (i.e., Mechanics, Riggers, Supervisors, etc.), the estimated number of staff and their hourly rates by activity, and the total duration of each activity.

Based on the base case depicted above, Table 10-7 shows Loading Costs by Cask Type. For each Cask Type, the table depicts Total Hours, the Per Cask cost, and the Per Campaign (4 loaded casks) cost. For each of the five additional Cask Types, the rightmost column shows the reasons for adjustments (or the absence thereof) in Loading Costs.

Table 10-6. Loading Costs and Duration

Step	Step Description	Total Personnel #	Duration hrs	Cumulative Duration hrs	Staff Cost by Activity $	Staff/Other Cost Totals $
BARE CASK LOADING AND TRANSFER OF CASK TO RAIL CAR						
Prepare & Inspect Empty Cask						
1	Unload Empty Cask from Train/Prepare for Transport	9	3.0	3.0	$2,100	
2	Empty Cask Transport to Rx Building	9	4.0	7.0	$2,800	
3	Cask Movement from Rx Bldg Ground Floor to Rx Bldg RFF	10	3.5	10.5	$2,800	
4	Cask Disassembly (Protective Cover and Neutron Shield)	9	3.0	13.5	$2,250	
5	Disassmble Cask (Covers and Lid)	9	4.0	17.5	$2,900	
6	Cask Lid, Drain, Vent and OP Port Seal Replacement & Misc. Inspections	9	3.0	20.5	$2,175	
7	Inspection of Flange, Alignment Pins and Cask Cavity	8	1.0	21.5	$650	$15,675
Insert Cask into Pool & Load Fuel						
8	Cask Insertion into Fuel Pool	12	3.0	24.5	$2,925	
9	Cask Fuel Loading	5	8.0	32.5	$3,400	$6,325
Remove (from Pool) & Close Loaded Cask						
10	Basket Hold Down Ring and Lid Installation	11	3.0	35.5	$2,700	
11	Cask Removal from Fuel Pool and Draining	14	6.0	41.5	$6,900	
12	Cask Placement on Fuel Floor and Decontami	10	3.0	44.5	$2,475	
13	Lid Bolt Installation	7	3.0	47.5	$1,725	$13,800
Complete Cask Drying & Testing						
14	Cask Drying	6	10.0	57.5	$5,000	
15	Helium Fill	5	2.5	60.0	$1,063	
16	Preliminary Leak Task	6	2.0	62.0	$1,000	
17	Cask Reassembly	9	5.0	67.0	$3,750	
18	Cask Leak Test	6	3.0	70.0	$1,500	
19	Cask Preparation for Transport	5	1.0	71.0	$425	$12,738
Move Cask to Rail Area & Place on Rail Car						
20	Cask Movement from Rx Bldg RFF to Rx Bldg Ground Floor	11	2.0	73.0	$1,800	
21	Preparation for Cask Transport	6	1.0	74.0	$500	
22	Cask Transport from Rx Bldg to Train Loading Area	14	4.0	78.0	$4,500	
23	Cask Placement on Rail Car	13	2.0	80.0	$2,100	$8,900
	Other Costs (consumables - 50% of total)					$28,719
	Sub-Total (one Cask)					$86,156
	Number of Casks per Loading					4
	Total (Campaign)					$344,625
	Sub-Total (one Cask) with Contingency @ 40%					$120,619
	Number of Casks per Loading					4
	Total (Campaign) (with Contingency @ 40%)					$482,475

Table 10-7. Loading Costs by Cask Type

		Base Cost		With 40% Contingency		
Cask Type	**Total Hours**	**Per Cask**	**Campaign**	**Per Cask**	**Campaign**	**Adjustments**
Long (182″) Cask - 68B Intact (up to 8 DFCs)	80	$ 86,156	$ 344,625	$ 120,619	$ 482,475	Base Case – TN68 used as proxy
Long (182″) Cask - 61B DFC	80	$ 86,156	$ 344,625	$ 120,619	$ 482,475	Same as Base Case – Loading time remains at 8 hours as fewer assemblies are offset by increased time to load DFCs
Long (182″) Cask - 32P Intact (up to 8 DFCs)	78	$ 85,450	$ 341,801	$ 119,631	$ 478,522	Minor adjustment to Base Case loading hours to account for fewer assemblies
Long(182″) Cask- 28P DFC	78	$ 85,450	$ 341,801	$ 119,631	$ 478,522	Same as Standard 32P Intact – Loading hours remain at approximately 6 hours as fewer. assemblies are offset by increased time to load DFCs
Short (174″) Cask – 32P Intact (up to 8 DFCs)	78	$ 84,163	$ 336,653	$ 117,829	$ 471,314	Minor adjustments to (a) Base Case loading hours to account for fewer assemblies and (b) Base Case Other Costs to account for shorter length
Short (174″) Cask – 28P DFC	78	$ 84,163	$ 336,653	$ 117,829	$ 471,314	Same as Short 32P Intact – Loading hours remain at approximately 6 hours as fewer assemblies are offset by increased time to load DFCs

With regard to Unloading Costs, Figure 10-2 depicts the high-level steps in the Cask Unloading process at a potential CSF. Further, Table 10-8 on the next page and G-5 in Appendix G provide additional detail and insights into this process. Again, the process is based on those at the Peach Bottom reactor tailored to this task. For example, activities 11) and 12) were added to account for the return of the empty cask to the train (as opposed to leaving it on the fuel pool floor).

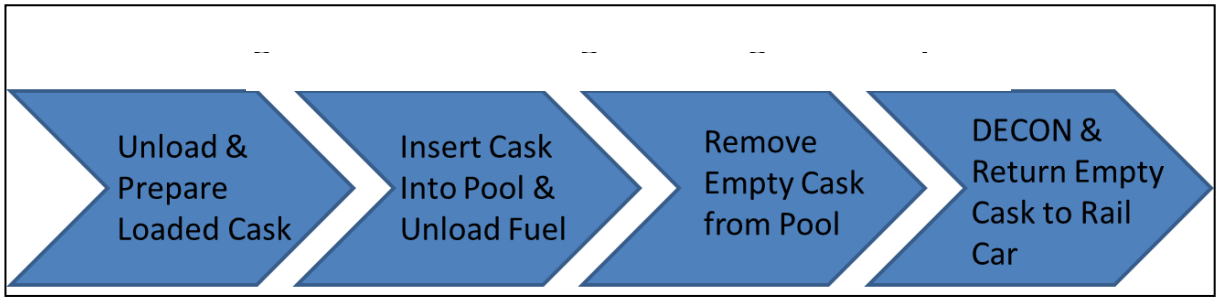

Figure 10-2. Cask Unloading Process High-Level Steps

Table 10-8. Unloading Costs and Durations

Step #	Step Description	Total Personnel	Duration	Cumulative Duration	Staff Cost by Activity	Staff/Other Cost Totals
CASK UNLOADING OPERATIONS						
Unload & Prepare Loaded Cask						
1	Unload Loaded Cask from Train/Prepare for Transport	17	5.0	5.0	$6,750	
2	Loaded Cask Transport to Rx Bldg	15	3.0	8.0	$3,600	
3	Cask Movement from Rx Bldg Ground Floor to RFF	10	3.0	11.0	$2,475	
4	Cask Disassembly (Protective Cover and Neutron Shield)	10	2.0	13.0	$1,650	
5	Cask Venting/Sampling and Preparation for Installation into Fuel Pool	11	12.0	25.0	$10,800	$25,275
Insert Cask into Pool & Unload Fuel						
6	Cask Installation into Fuel Pool	13	4.0	29.0	$4,300	
7	Cask Flooding and Cask Lid Removal	13	5.0	34.0	$5,375	
8	Cask Fuel Unloading	8	9.0	43.0	$6,075	$15,750
Remove Empty Cask from Pool						
9	Empty Cask Removal from Fuel Pool and Drainin	13	5.0	48.0	$5,375	$5,375
Decon & Return Empty Cask to Rail Car						
10	Empty Cask Placement on Fuel Floor and Decon	11	3.0	51.0	$2,775	
11	Transfer Empty Cask to Train Loading Area	9	4.0	55.0	$2,800	
12	Place Empty Cask on Rail Car	7	2.0	57.0	$1,100	$6,675
	Other Costs (consumables - 25% of total)					$13,269
	Sub-Total (one Cask)					$66,344
	Number of Casks per Unloading					4
	Total (Campaign)					$265,375
	Sub-Total (one Cask) with Contingency @ 30%					$86,247
	Number of Casks per Loading					4
	Total (Campaign) (with Contingency @ 30%)					$344,988
Step Execution Safety Risk:						
	= Low (Minimal)					
	= Moderate (Moderate)					
	= High (Greatest)					

As with the loading costs, TN-68 is used as the base case proxy for the Long 182" Cask – 68B Intact. In contrast to the loading costs, consumables for loading are set at 25% of cost to that point and contingency is set at 30%, as this process is less involved and has fewer steps.

10.5 CASK INSPECTION, MAINTENANCE AND REFURBISHMENT COSTS

Inspection, maintenance and refurbishment costs are provided in Table 10-9. The notes column in the table depicts the specific costs that are included in each estimate. The first two, inspection and maintenance, occur during mobilization for loading operations. The third, refurbishment, occurs once every 10-15 years as needed.

Table 10-9. Cask Other Costs

COST ELEMENT (costs in current year 2015 $)		Quantity	UNIT COST ($)	Contingency @ 30%	Total Cost ($)	NOTES/COMMENTS
	Inspection (per campaign)	1	$ 24,000	$ 7,200	$ 31,200	NDE and Helium leak testing/ other initial inspections
	Maintenance (per campaign)	1	$ 65, 000	$ 19,500	$ 84,500	Parts, consumables, instrument calibrations, other maintenance
	Refurbishment (per cask system)	1	$ 14,000	$ 4,200	$ 18,200	Painting and instrumentation (as needed)

11 TRADE-OFF STUDY BETWEEN THE DESIGN CONCEPTS FOR THE BARE FUEL AND DAMAGED FUEL CAN TRANSPORTATION CASKS

The Task Order 17 SOW required that a study be performed to cover the trade space between the design concepts for the PWR and BWR bare SNF transportation cask and the PWR and BWR damaged fuel can transportation cask, in order to assess how important attributes, such as capacity and cost, are expected to vary as the number of assemblies in DFCs which the cask must be able to accommodate is varied. As described in Section 4.2 and detailed in Table 4-4 (Fuel Loading Specification), the results of this study are that, for capacity, the PWR (32-PWR) and BWR (68-BWR) bare SNF transportation cask design concepts are also able to accommodate combinations of 8 PWR assemblies in DFCs and 24 bare PWR assemblies, and 8 BWR assemblies in DFCs and 60 bare BWR assemblies, respectively. This is accomplished via certain cells on the periphery of the fuel baskets, which are large enough to accommodate theDFCs. The 32-PWR fuel basket could accommodate eight DFCs in the “corner” cells on the basket periphery and the 68-BWR fuel basket could accommodate eight DFCs around the basket edge. The potential to accommodate DFCs in the peripheral cells was identified early in the design and materialized once the designs for the fuel baskets and the DFCs were completed. The ability of the 32-PWR and 68-BWR casks to transport a mixture of bare fuel and DFCs is analysed within the thermal, shielding and criticality analyses detailed in Sections 4.3.2.2, 4.3.3 and 4.3.4, respectively.

Regarding cost, Table 10-2 itemizes the estimated acquisition costs for the PWR and BWR bare SNF design concepts and the SNF in damaged fuel cans design concepts.

12 100-TON CASK

Preliminary evaluations show that a cask similar to that described in Section 4.1.1, with the cask diameter reduced from 70 inches to 59-60 inches so as to reduce the weight to within 100 tons, would be capable of accommodating 24 PWR fuel assemblies, with a basket design similar to the 32P basket described in Section 4.1.2.1. The available cask cavity length would be 180 inches (as is the case for the longer primary cask design).

As with the primary cask designs, the water inside the cask interior will have to be pumped out before lifting the cask, to keep the hook weight under 100 tons. Also, as with the primary (32P) design, a shorter version of the cask could be designed, if necessary, to keep the hook weight under 100 tons with water.

Four larger basket cells would fit in the corner locations around the basket periphery. That would allow the basket to accommodate up to four damaged PWR assemblies, in DFCs.

Restrictions on the PWR assemblies that could be loaded into the 100 ton cask would be similar to those shown in the Table 4-4 loading specification. The number of non-periphery cells in the 24P basket may be as low as four. The allowable overall cask heat load for the 100 ton cask will be approximately 18-20 kW.

If all high burnup assemblies are required to be placed into DFCs, then the capacity of the 100 ton cask would fall from 24 to 21 PWR assemblies, due to the larger basket cells required to accommodate DFCs. A payload of 21 assemblies inside DFCs will weigh less than a payload of 24 intact assemblies.

For BWR fuel, the payload capacity of the intact assembly basket would have to be reduced from 68 assemblies to 48 assemblies in order to fit within a 59-60 inch diameter cask cavity. The weight of a 48-assembly guide tube and spacer plate basket (similar to the design of the baskets described in Section 4.1.2) and a 48 BWR assembly payload, should be similar to or lower than that of the 24 PWR assembly basket and payload discussed above. If all high burnup assemblies are required to be placed into DFCs, then the capacity of the 100 ton cask would fall from 48 to 44 BWR assemblies, due to the larger basket cells required to accommodate DFCs.

13 SPECIAL FEATURES THAT COULD IMPROVE THE BASE DESIGNS

The (effective) 180 inch cavity length of the proposed cask does not accommodate South Texas or AP1000 assemblies, or CE 16×16 assemblies with inserted control components. CE 16×16 fuel with control components may have a nominal, pre-irradiation length of up to 193 inches, and the length of SouthTexas (W 17×17 XLR) fuel without control components is 199 inches[12]. The length of AP1000 fuel assemblies is similar to that of South Texas assemblies (with both assembly types having a 14 ft. active fuel region).

To accommodate all three assembly types discussed above, the effective cask cavity length would have to be increased from 180 inches to 201 inches. (The actual cavity length of

182 inches would be increased to 203 inches, where payload materials with significant radiation sources may not extend into the top two inches of the cask cavity.)

Cask weight calculations show that if the effective cask cavity length was increased to 201 inches, the cask weight shown in Table 4-1 would increase from 159,400 lbs. to 175,700 lbs. That is based on the assumption that the lengths of the cask inner liner, radial gamma shield, outer shell and radial neutron shield all increase along with the cavity length. The weight of the heaviest (28P) basket would increase from 23,500 lbs. to 26,100 lbs. The weight of South Texas and AP1000 assemblies is estimated by scaling the standard W 17×17 assembly weight of approximately 1,500 lbs. by the ratio of core zone length (14/12), which results in an assembly weight of approximately 1,750 lbs. That weight will bound the weight of a CE 16×16 assembly with control components. Based on these cask, basket and assembly weights, the overall hook weight of the cask system would increase to 270,500 lbs., or approximately 135 tons, for the heaviest basket configuration.

Accommodating control components for South Texas and AP1000 fuel may require up to eight inches of additional cask cavity length. Such an additional increase would result in less than 5 tons of extra cask system weight, resulting in an overall weight of less than 140 tons.

Both the South Texas plant and all AP1000 plants under construction have 150 ton cranes. Thus, they will be able to handle the increased cask weight associated with the casks required to accommodate their longer fuel assemblies.

With respect to cask analysis and licensing, little additional effort would be required to add a longer cask option. The longer cask design would be identical to the reference design, except for the somewhat longer length. There would be little impact on thermal, shielding or criticality analyses. In those areas, it's likely that a single, bounding licensing analysis could be used to cover both cask length options. The same is true for structural evaluations, with the possible exception of analyses related to weight, center of gravity, and cask slapdown effects. In this area as well, however, one of the cask lengths could be chosen as the bounding case, avoiding the need for multiple analyses. It is not anticipated that the longer cask length would lead to any problems (i.e., lead to unacceptable analysis results). Due to the heavier overall cask weight, there may need to be some changes to the impact limiter design (e.g., stiffer crush materials).

13.1 28 KW CASK

The maximum allowable payload heat generation level for the cask is governed by the maximum allowable temperature for the cask neutron shield material. As shown in Section 4.3.2, increasing the cask's allowable payload heat generation level from 24 kW to 28 kW does not result in neutron shield material temperatures significantly over the 300 °F temperature limit. Thus, minor design changes such as increasing the quantity or thickness of the copper fins in the neutron shield region, are likely to be sufficient to allow a cask heat load of 28 kW. An alternate neutron shield material with a somewhat higher allowable service temperature would also allow that.

For uniform payloads (where all loaded assemblies have the same heat generation level), the basket thermal analyses presented in Section 4.3.2.2 show significant component temperature margins versus applicable limits. Thus, it is likely that an overall basket heat load of 28 kW could be accommodated without exceeding fuel cladding or basket material temperature limits. For zone loaded payload configurations where very hot assemblies are placed in the basket center, the Section 4.3.2.2 results show much tighter margins, particularly for the 32P basket. Thus, the number of 62.5 GWd/MTU, 5 year cooled assemblies that the baskets could accommodate, for example, would probably not increase if the cask's overall heat generation limit were increased to 28 kW.

The other factor that governs the minimum required cooling times for assemblies loaded into the cask system is shielding limitations. For uniform assembly payloads, the shielding analyses presented in Section 4.3.3 are conservatively based on lower-bound PWR and BWR assembly uranium loadings of 0.4167 MTU and 0.1755 MTU, respectively. This maximizes the allowable per-MTU heat generation level of the fuel, within the per-assembly heat generation limits of 0.75 kW/assembly and 0.353 kW/assembly, for PWR and BWR assemblies, respectively. It allowed maximum fuel heat generation levels of 1.8 kW/MTU and 2.0 kW/MTU for PWR and BWR fuel, respectively. Cask exterior dose rates scale with per-MTU heat generation level, as opposed to per-assembly heat generation level, and do not vary significantly with assembly uranium loading. The analyzed burnup and cooling time combinations presented in Table 4-24 through Table 4-39 are based upon the above fuel (per-MTU) heat generation levels.

For the lower-bound assembly uranium loadings, the above fuel heat generation levels correspond to an overall cask heat load of 24 kW. For most assembly types, which have higher uranium loadings, the above per-MTU heat generation levels would yield an overall payload heat generation level in excess of the 24 kW limit. Thus, for most assemblies, the actual required cooling times (for a given burnup level) would be higher than those shown in Table 4-24 through Table 4-39. Raising the cask's allowable heat generation level to 28 kW would allow fuel heat generation levels up to 1.8 kW/MTU and 2.0 kW/MTU (for PWR and BWR fuel, respectively) even for PWR and BWR assemblies with upper –bound uranium loadings of 0.47 MTU and 0.2 MTU, respectively. Thus, the result would be that, for uniform assembly payloads, the burnup-dependent required cooling times shown in Table 4-24 through Table 4-39 would apply for all assembly types. Cask exterior dose rate limits will not allow cooling times lower than those presented in the Section 4.3.3 tables, regardless of the cask's allowable overall heat generation level.

In the case of zone loaded payloads, the Section 4.3.3 shielding analyses showed that very hot assemblies (i.e., 62.5 GWd/MTU, 5 year cooled assemblies in some cases, and assemblies almost that severe in all cases), could be loaded into all of the non-periphery cells of the baskets, as long as the per-MTU heat generation levels of the assemblies in the periphery cells does not exceed 1.8 kW/MTU for PWR fuel and 2.0 kW/MTU for BWR fuel. The (hypothetical) analyzed configurations had an overall heat load of 39 kW. Thus, it appears that if zone loading is used, shielding considerations will not limit the required cooling times for assemblies placed in the non-periphery cells of the baskets. Such contents will be limited by the basket's ability to keep cladding and component temperatures within their limits, for payloads with an overall heat generation level of 28 kW.

The evaluation presented in Section 8.1 estimated the impact of increasing the cask's allowable heat load from 24 kW to 28 kW on the time required before the spent fuel pool of a shutdown plant could be completely emptied. The results showed that, for all analyzed pool-average assembly burnup levels, increasing the cask heat load to 28 kW reduces the required time by approximately 3 years.

14 CONCLUSION

This Task Order 17 report has provided the SNF transportation cask concepts that have been developed, analyzed and evaluated by the Energy*Solutions* Team.

The key outputs from this study are:

1. The base cask concept is a 125-ton (maximum), single lid cask designed to accommodate an overall fuel assembly heat generation level of up to 24 kW. PWR and BWR designs have two fuel basket capacities each, which are 32 bare PWR assemblies (32-PWR) or 28 PWR assemblies in DFCs (28-PWR), and 68 bare BWR assemblies (68-BWR) or 61 BWR (61-BWR) assemblies in DFCs, respectively. All of the DFC designs are slightly lower capacity due to thermal constraints. The PWR and BWR bare fuel designs are also able to accommodate combinations of 8 PWR assemblies in DFCs and 24 bare PWR assemblies, and 8 BWR assemblies in DFCs and 60 bare BWR assemblies, respectively. Assuming that there is no other fuel in the basket, you can transport twelve (12) 62.5 GWd/MT PWR assemblies with out-of-reactor cooling times of 5 years in either the 32-PWR or 28-PWR designs. The 68-BWR, dependent on MTU (Metric Ton of Uranium) and enrichment, can transport up to thirty-two (32) 62.5 GWd/MT BWR assemblies with out-of-reactor cooling times of 5 years. The 61-BWR, again dependent on MTU and enrichment, can transport up to twenty-nine (29) 62.5 GWd/MT BWR assemblies with out-of-reactor cooling times of 5 years.

2. The primary cask concept evaluated has a cask internal cavity length of 182″ and a diameter of 70″ and is termed the "long" or "regular" cask. It can accommodate all US BWR fuel and all US PWR fuel with the exception of CE 16×16 fuel with control components, South Texas Project and AP1000 fuels. The cask concepts are designed to accommodate any PWR or BWR fuel assembly payload that has an overall heat generation level of 24 kW or less. The overall envelope of the package (including the 128 inch diameter of the impact limiters) meets standard Association of American Railroads requirements. The transportation cask has a target "under-the-hook" weight of 125 Tons (250,000 lbs) when loaded with the fuel baskets and fuel. In an effort to maximize the shielding for the transportation cask, it has been determined that the loading operation will include the removal of internal water (estimated weight of the water is around 15,000 lbs) prior to lifting the cask from the pool. With respect to criticality, the system will be able to accommodate the entire US spent fuel inventory; the only qualification being that a slight reduction in payload capacity may be required for a very small fraction of shipments.

3. Details on a "short" cask have also been provided, which has the same cask internal cavity, but a reduced length of 174″. It can take all US PWR fuel with the exception of CE 16×16 fuel; with or without inserted control components. However, most BWR fuels can't be loaded. The short cask can accommodate full payloads of PWR assemblies with weights up to 1,725 lbs (which is bounding for all US PWR fuel, including inserted control components) without requiring a pool crane capacity in excess of 125 tons. The longer-cavity cask requires a pool crane capacity in excess of 125 tons in order to accommodate full payloads of PWR fuel with assembly weights in excess of 1,500 lbs.

4. Details on a 100 ton cask option have also be provided, which again would require the water inside the cask interior to be pumped out before lifting the cask from the spent fuel pool to keep the hook weight under 100 tons. It would be capable of accommodating 24-PWR bare fuel assemblies or 48-BWR bare fuel assemblies.

5. The structural, thermal, shielding and criticality analyses have been completed for the transportation cask design concepts.

    a. For the cask body and the fuel baskets, structural analyses have been performed to demonstrate that the basket assemblies are capable of satisfying the applicable structural design criteria when subjected to the most severe transportation design loading.

    b. The thermal analyses performed for the cask concluded that the cask performs as expected within the general heat flux limitations available at this time. During final design and analysis, it is expected that the basket designs will provide better axial distribution than that used in the models (i.e. tube and disk) allowing slightly better thermal performance by developing a more uniform or stretching of the thermal gradients for greater distribution.

    c. The results of the thermal analyses show that the assembly peak cladding temperatures remain below the 400°C limit for all four basket designs. The basket structural steel remains under the ASME code limit of 700°F for all basket designs. The peak borated aluminum temperatures are under 650°F for all four basket designs. These temperatures are not considered a concern, as no structural credit is taken for the borated aluminum material. The analyses also show that for all four basket designs, the cladding and basket material temperature limits are not exceeded even if the maximum allowable overall heat generation level of 24 kW is concentrated within 12 PWR assemblies that have the maximum allowable individual assembly heat generation level of 2.0 kW, or 28 BWR assemblies that have the maximum allowable individual assembly heat generation level of 0.85 kW, where those assemblies are concentrated in the basket center cells (i.e., are placed in the worst possible basket locations).

    d. The results of the shielding analyses performed on the design concepts have concluded that for any uniform SNF assembly payload that has an overall heat generation level under 24 kW, the dose rates will meet the 10 CFR 71 requirements with respect to shielding. It was noted during the analyses that the

potential exists for gamma streaming through some shielding penetrations. This is discussed in Section 4.3.3.6 and several minor changes to the cask design are identified to address these potential issues, which would be made during the formal cask design and licensing process.

e. The conclusions from the PWR and BWR criticality analyses are documented in sections 4.3.4.1 and 4.3.4.2, respectively and, as expected, are dependent on the state of the fuel that is assumed for the analysis, i.e. intact, partially reconfigured, fully reconfigured or a combination such as a bare fuel cask that contains both DFCs and bare fuel. For the 32-PWR, 28-PWR, 68-BWR and 61-BWR baskets, several different configurations have been modeled, which reflect various licensing contingencies. The evaluations of these alternative cases allow the impacts on system performance to be understood for various licensing contingencies (concerning how high burnup and/or damaged fuel are treated, for example).

6. As detailed in Section 11, the PWR (32-PWR) and BWR (68-BWR) bare SNF transportation cask design concepts are also able to accommodate combinations of 8 PWR assemblies in DFCs and 24 bare PWR assemblies, and 8 BWR assemblies in DFCs and 60 bare BWR assemblies, respectively. This is accomplished via certain cells on the periphery of the fuel baskets, which are large enough to accommodate theDFCs. The 32-PWR fuel basket could accommodate eight DFCs in the “corner” cells on the basket periphery and the 68-BWR fuel basket could accommodate eight DFCs around the basket edge. The potential to accommodate DFCs in the peripheral cells was identified early in the design and materialized once the designs for the fuel baskets and the DFCs were completed.

7. Section 13 identifies the impacts associated with a bare fuel transportation cask that could accommodate South Texas Project or AP1000 SNF assemblies or CE 16×16 assemblies with inserted control components. The effective cask cavity length would need to be increased from 180 inches to 201 inches. (The actual cavity length of 182 inches would be increased to 203 inches, where payload materials with significant radiation sources may not extend into the top two inches of the cask cavity.) Taking into account the increased cask and basket sizes and the heaviest SNF assemblies, the overall hook weight would be approximately 135 tons. Accommodating control components for South Texas project and AP1000 SNF may require up to eight inches of additional cask cavity length. Such an additional increase would result in less than 5 tons of extra cask system weight, resulting in an overall weight of less than 140 tons. Both the South Texas plant and all AP1000 plants under construction have 150 ton cranes. Thus, they will be able to handle the increased cask weight associated with the casks required to accommodate their longer fuel assemblies.

8. Regarding modifying the cask design to take a higher than 24 kW thermal load, as documented in Section 4.3.2, increasing the cask’s allowable payload heat generation level from 24 kW to 28 kW does not result in neutron shield material temperatures significantly over the 300°F temperature limit. Thus, minor design changes such as

increasing the quantity or thickness of the copper fins in the neutron shield region, are likely to be sufficient to allow a cask heat load of 28 kW. An alternate neutron shield material with a somewhat higher allowable service temperature would also allow that.

9. Operation of the cask design concepts is in line with bare fuel casks in use today and operating procedures and tests are based on industry standard practices.

10. A time and motion assessment was performed based on Exelon's bare fuel cask experience and the estimated loading time was 78 hours (from preparation of the empty transportation cask to placement of the loaded cask at the rail car loading area) and the unloading time was 50 hours (preparation of received loaded transportation cask to the empty cask placed on the fuel building floor). Automated vacuum drying and resource utilization to allow continuous 24/7 work are two items that could improve these times.

11. The conclusion of an assessment of the "licensability" of the transportation cask design concepts is that NRC approval of the SNF transportation cask design would be anticipated. The applicant should anticipate a detailed NRC review involving multiple technical disciplines requiring approximately two-years of staff review time. However, there are many cask design features and similarities to previously approved designs that should facilitate the NRC review. Testing and/or modeling analysis would be necessary to demonstrate the acceptability of the SNF transportation package including the newly designed impact limiters. Further development of NRC's review guidance for transport of high burn-up fuel is anticipated over the next few years. At the time of license application, the applicant will need to confirm that the application is consistent with the then current NRC guidance on transport of high burn-up fuel The applicant should anticipate that the accident testing and analysis and the technical basis and assumptions for high burn-up fuel will receive close NRC scrutiny.

For reference, a cross-reference between the contents of this report and the Task Order 17 SOW is provided in Appendix C.

15 REFERENCES

10 CFR 20, " Standards for Protection Against Radiation", *Code of Federal Regulations*, as amended.

10 CFR 71, "Packaging and Transportation of Radioactive Material", *Code of Federal Regulations*, as amended.

49 CFR 172, "Hazardous Materials Table, Special Provisions, Hazardous Materials Communications, Emergency Response Information, Training Requirements, and Security Plans", *Code of Federal Regulations*, as amended.

49 CFR 173, "Shippers – General Requirements for Shipments and Packagings", *Code of Federal Regulations*, as amended.

49 CFR Subchapter C, "Hazardous Materials Regulations", *Code of Federal Regulations*, as amended.

Association of American Railroads (AAR), 2008, *Performance Specification for Trains Used to Carry High Level Radioactive Materials*, Standard S-2043, Association of American Railroads, Washington, D.C,-.

Association of American Railroads (AAR) Field Manual, Rule 88

American National Standards Institute, ANSI N14.5 – 1997, *Radioactive Materials – Leakage Tests on Packages for Shipment*, American National Standards Institute, New York.

American National Standards Institute, ANSI N14.6 – 1987 – *Radioactive Materials – Special Lifting Devices for Shipping Containers Weighing 10,000 Pounds (4500 kg) or More*, American National Standards Institute, New York.

American Society of Mechanical Engineers (ASME) Boiler and Pressure Vessel Code, Section III, Division I, Subsection NG, Core Support Structures,

ASME Appendix F, Article F-1341.2

American Society of Mechanical Engineers (ASME), Code Section III, NB-5350 and NB 5320

ANSYS, Canonsburg, PA –

DOE/RW-0184, Characterization of Spent Fuel, High-Level Waste, and Other Radioactive Wastes Which May Require Long-Term Isolation, Appendix 2A, Volume 3 of 6, U.S. Department of Energy, Office of Civilian Nuclear Waste Management, December 1987.

Final Safety Analysis Report for the VSC-24 Ventilated Storage Cask System, Revision 5, March 2003, NRC Docket No. 72-1007, BNFL Fuel Solutions Corporation

FuelSolutions™ TS125 Transportation Cask Safety Analysis Report, Revision 3, April 2002, NRC Docket No. 71-9276, BNFL Fuel Solutions Corporation

Los Alamos National Laboratory, 2003, MCNP – A General Monte Carlo N-Particle Transport Code, Version 5, LA-UR-03-1987

Machinery's Handbook

MAGNASTOR Final Safety Analysis Report, Revision 0, February 2009, NRC Docket No. 72-1301, NAC International

MAGNATRAN Transport Cask SAR, Revision 12A, October 2012, NRC Docket No. 71-9356, NAC International

NRC Interim Staff Guidance (ISG) documents, http://www.nrc.gov/reading-rm/doc-collections/isg/spent-fuel.html.

ISG-1, Rev 2 *Classifying the Condition of Spent Nuclear Fuel for Interim Storage and Transportation Based on Function (formerly entitled "Damaged Fuel")*

ISG-7 *Potential Generic Issue Concerning Cask Heat Transfer in a Transportation Accident*

ISG-8, Rev 3 *Burnup Credit in the Criticality Safety Analyses of PWR Spent Fuel in Transportation and Storage Casks*

ISG-11, Rev 3 *Cladding Considerations in the Transportation and Storage of Spent Fuel*

ISG-15 *Materials Evaluation*

ISG-19 *Moderator Exclusion Under Hypothetical Accident Conditions and Demonstrating Subcriticality of Spent Fuel Under the Requirements of 10 CFR 71.55 (e)*

ISG-21 *Use of Computational Modeling Software*

ISG-22 *Potential Rod Splitting Due to Exposure to an Oxidizing Atmosphere During Short-Term Cask Loading Operations in LWR or Other Uranium Oxide Based Fuel*

ISG-23 *Application of ASTM Standard Practice C1671-07 when Performing technical reviews of spent fuel storage and transportation packaging licensing actions*

NRC Regulatory Guide 7.9, *Standard Format and Content of Part 71 Applications for Approval of Packages for Radioactive Material*, http://www.nrc.gov/reading-rm/doc-collections/reg-guides/.

NRC Certificate of Compliance No. 9235, NAC STC Transportation Cask, NRC Docket 71-9235, dated May 28, 2104.

NRC Certificate of Compliance No. 1031, NAC MAGNASTOR Part 72, NRC Docket 72-1031, dated February 4, 2009.

NUREG-0612,1980, *Control of Heavy Loads at Nuclear Power Plants - Resolution of Generic Technical Activity A-36*, Office of Nuclear Reactor Regulation, U.S. Nuclear Regulatory Commission, Washington, D.C.

NUREG-1617, 2000, *Standard Review Plan for Transportation Packages for Spent Nuclear Fuel*, Office of Nuclear Material Safety and Safeguards, U.S. Nuclear Regulatory Commission, Washington, D.C.

NUREG/CR6007, 1992, *Stress Analysis of Closure Bolts for Shipping Casks*, Office of Nuclear Material Safety and Safeguards, U.S. Nuclear Regulatory Commission, Washington, D.C.

Oak Ridge National Laboratory, 1991, Oak Ridge Isotope Generation and Depletion Code, ORIGEN2, version 2.1.

Regulatory Guide 7.6, *Design Criteria for the Structural Analysis of Shipping Cask Containment Vessels*, Revision 1, U.S. Nuclear Regulatory Commission, Office of Standards Development, March 1978

16 APPENDICES

APPENDIX A - RESULTS FROM FACILITATED WORKSHOP # 1, COLUMBIA, MD, WORKSHOP, SEPTEMBER 23 - 25, 2014

The first workshop was held from September 23rd to September 25th, 2014, at Energy*Solution*s offices in Columbia, Maryland, and was attended by representatives from all of the companies comprising the team. The workshop was facilitated by the Task Order 17 Project Manager and followed the agenda below:

- Day 1
  - Finalize Workshop Objective
  - Phase 1 Presentations
  - Establish Technical Interface
- Day 2
  - Options Identification
  - Options Down-Select
- Day 3
  - Options Confirmation
  - Planning for Subsequent Phases

Day 1

Finalize Workshop Objective

The following objective for the workshop was reviewed and agreed to:

To establish a technical framework, and brainstorm and down-select ideas for a reusable rail cask optimized for transport of intact individual bare fuel assemblies for bare fuel and a reusable rail cask optimized for transport that is able to accommodate assemblies in DFCs in all positions. The output of this Phase 2 workshop will be a shortlist of options, ideas and recommendations for the requisite rail casks, which will be addressed with additional scrutiny in Phase 3.

Phase 1 Presentations

During Phase 1 and in preparation for the first workshop, each of the team partners was assigned specific study activities and the topics covered included:

- Gather ideas, recommendations and initial concepts for internal baskets and DFCs.
- Gather ideas, recommendations and initial concepts for cask bodies, impact limiters and cask handling equipment.
- Gather information on nuclear plant crane capacities.
- Gather information from ongoing SNF Disposition campaign work and Consolidated Storage Facility (CSF) development work.

- Gather information on NRC and DOT regulatory and licensing requirements, NRC Regulatory Guides, and recent licensing experience for the transportation of bare SNF, high burn-up SNF and fuel assemblies in DFCs.
- Gather information on existing and future inventory of light water reactor SNF.
- Gather Exelon lessons learned, experience and recommendations for the bare fuel casks and DFCs and associated handling equipment and loading operations.

The information collected during Phase 1 was shared with the Team, via a mixture of discussions and presentations, and the key points were, as follows:

1. Focus on 125 ton cask and look at impacts for 100 ton cask.
2. Zion has around 10% damaged fuel. All high burn-up assemblies were canned.
3. The neutron shielding limits the heat capacity. Target will be 24kW for now.
4. Need to look at intermediate cases for loading and fuel loading scenarios.
5. 2kW per fuel assembly is 5 year cooled, 62.5 GWd/MT burn-up.
6. We need to focus on getting the heat capacity above 24kW.
7. The HISTAR 180 bare fuel cask has a maximum heat capacity of 32kW, has a bolted lid, and is not designed for DFCs.
8. Special features to be considered include different materials for neutron shielding.
9. Can perform an end of life prediction for a reactor site, but what actually would be left in the pool? What would the average heat per assembly be? Assume coldest stuff goes into dry storage.
10. Utilities will likely put hot fuel into dry storage and keep colder fuel for shielding.
11. The ISG-11 400 ºC limit is to protect the cladding. If it's going in a can then no need to worry about heat limit. However, neutron shielding limits heat.
12. The starting point for the PWR basket design is 32 PWR assemblies and 28 PWR assemblies in Damaged Fuel Cans.
13. An average heat per assembly of 750 watts is a reasonable assumption to proceed with.
14. Being able to use some of the data from the burnup/enrichment data from the MAGNATRAN criticality analysis will be beneficial, on the basis that the 37 PWR MAGNATRAN with intact fuel covers the vast majority of the fuel inventory, including high burnup (> 45 GWd/MT). Thus, using this analysis will allow us to

show that a cask loaded with 32P assemblies will handle the majority of the high burnup inventory.

15. NAC did license downgraded canisters for Zion.
16. Control components add length to the fuel assembly length.
17. ES Campbell has briefly looked at the requirements for BWR fuel. Looking at 68 assemblies intact and 61 or 57 for DFCs.
18. Exelon MAGNATRAN experience – Have several canisters that won't be able to be transported until 2030 because they have to cool down. Dose limited.
19. Have transported bare fuel at Peach Bottom back to pool for repackaging. Used TN-68
20. Bolted casks are not good for long term storage.
21. No issues experienced with putting fuel back in the pool at Peach Bottom.
22. Have dose records for loading TN68 bare fuel casks.
23. Vacuum drying is the long pole in the tent.
24. Inert gas in transportation cask for heat transfer and corrosion prevention.
25. Five days for filling TN 68 – assuming day shifts.
26. 8 DFCs can go in a TN-68, 30kW heat load. TN-32, -40, -68 are dual purpose bolted casks.
27. NAC DFC lids are removable. They are a press fit when installed and can then be pulled off.
28. Requirement is that a DFC has to be handled by normal means.
29. Grossly damaged fuel - need containers for this type of fuel.
30. Need to design a DFC that can be lifted.
31. Failed fuel needs special procedures.
32. 200 to 225 mrem dose incurred during loading of bare fuel casks.
33. Boral poison holds water. Up to 40 hours to dry. Pick your poison!
34. MAGNATRAN is not designed to go in a pool.

35. Two NAC STCs are in use in China. NAC are getting NAC STC certified for high burnup fuel - 26 assemblies - robust design. Also getting licensed to ship West Valley glass logs. Can get wet.

36. NAC UMS - Designed for canisterized fuel only. Single lid design. Licensed for APS, Maine Yankee. NAC UMS designed to get wet

37. Need a smooth outer service to aid with decontamination.

38. At Peach Bottom, they blow the water out into the pool as the cask is removed.

39. As it stands, if water can be pumped out as the cask is removed, then 32 PWR assemblies. If water has to be in, then less assemblies (around 24)

40. 7m3 of free space in MAGNATRAN – around 15,400 lbs of water.

41. NAC have cask designs with polymeric seals with NRC for licensing.

42. Two lids - use for storage so that you can monitor between the lids, or to address ISG- 19.1. For a transportation cask go for one lid. Have to cap dry and vent tubes.

43. Impact limiter must not be ripped off during testing.

44. Challenge is to protect the dry and vent ports during the drop.

45. Dual lift path = 4 trunions

46. Redundant load path = single failure proof.

47. $177,500 to load a cask at Peach Bottom. Monday to Friday. 68 BWR assemblies

48. Mobilize and demobilize costs. $300K for mobilization for a campaign to dry store and about $256K to demobilize

49. TN 68 cost $2M each.

50. At what point does 10 CFR 71 transition to 10 72? How long can a transportation cask be stored before it is shipped?

51. The EPRI dry transfer system was not accepted by NRC due to the level of design detail presented at the time.

52. DFCs are around $10k each

53. Stainless steel does weep after being in the pool.

54. Expected regulatory issues are:

    a. Package content reconfiguration after HAC (shielding, thermal and criticality concerns).

b. Material condition, e.g., cladding and assembly structure degradation of high burn-up SNF.

c. Transportation package with high burn-up SNF – thermal and shielding concerns.

d. Package design for damaged fuel (cans/canisters/mesh end caps)

e. Re-use of transportation package

The final work on Day 1 focused on reviewing and revising a pre-prepared technical framework; comprising of functional criteria, assumptions and constraints. The agreed upon technical framework is provided in Table A-1, below.

Table A-1. Task Order 17 Technical Framework.

No.	Functional Criteria, Constraints and Assumptions, which apply to the Development of the TO17 SNF Transportation Casks	Notes	Type
1	Agreed with DOE that good starting point is to design a 125 ton (Cask body + Basket + Fuel + lid + water) cask and identify the penalties for a 100 ton cask.	>75% of facilities are able to handle a 125 ton cask (per Brian Gutherman, DOE Support Team)	Assumption
2	For high burnup fuel the bare fuel assumption is that the fuel remains intact and does not turn to rubble.	Advised during status call	Assumption
3	Consider exceeding ISG-11, Rev. 3, guidance that for all burnups (low and high), the maximum calculated fuel cladding temperature should not exceed 400 ^{0}C for normal conditions of storage and short-term loading operations. What positions would we like to have these DFCs?	Advised by DOE during status call. Logic is that the temperature limit is to protect the cladding, but if the fuel is going into a DFC then removal of this constraint could potentially lead to cask performance improvements, e.g., cask heat load capacity might be able to be increased.	Assumption
4	Transportation cask system design concepts, including the cask, impact limiters, and DFCs (when applicable) must be capable of being licensable and usable for transportation under 10 CFR Part 71.	Reasonable assurance in the form of supporting analysis is required.	Constraint
5	In addition to the NRC's regulations, design activities shall also consider applicable regulatory guides and recent licensing experience and actions related to transportation cask design, fabrication, and operations. Any applicable Department of Transportation (DOT) requirements and constraints of AAR S-2043 that may have an impact on cask design shall also be considered.		Constraint
6	The cask system for DFCs in all positions will place constraints on capacity due to the size of the DFCs. The design concepts should satisfy all appropriate regulatory and operational limits, while maximizing capacity.		Constraint
7	The cask systems evaluated must ultimately be NRC licensable.		Constraint
8	The cask systems evaluated must ultimately be able to be fabricated within current facilities and capabilities.		Constraint
9	The cask systems evaluated must ultimately be usable by all or most nuclear utilities within their various physical and operational constraints.	Pre-bid Q&A stated that no changes will be made at reactor facilities.	Constraint
10	The cask systems evaluated must ultimately be able to be transported via rail.		Constraint
11	Q Mapping. Fuel Loading Scenarios.	Look at producing 3 or 4 thermally analyzed cases.	Constraint
12	The system design concept, including impact limiters, will have a maximum width of 128 inches.	The reason for this limit is that DOE intends to transport this cask on railcars that conform to Association of American Railroads (AAR) Standard S-2043, which allows a maximum railcar width of 128 inches. See paragraph 4.7.9.1 of Standard S-2043.	Functional Criteria
13	The system must allow for the transportation of high-burnup fuel (>45GWd/MTU) with a target of transporting fuel with an average assembly burnup of up to 62.5G Wd/MT with up to 5.0 wt% enrichment and out-of-reactor cooling time of 5 years.	At the kick-off meeting, DOE stressed that we are not to limit the design with the assumption that each cell in the cask basket has to be filled with maximum heat load as defined in the SOW. The cask has to be able to accommodate SNF with the maximum heat load, but DOE is looking for advice from industry on how to maximize transportation throughput by mixing and matching fuels for each cask load. Need to be clear regarding the definition of enrichment for damaged fuel and intact fuel. Do planar average criticality analysis and invoke SARs.	Functional Criteria
14	Reasonable assurance that the design concepts can accommodate essentially the entire existing and future inventory of commercial light-water reactor SNF must be provided, without undue penalty (e.g. reduced cask capacity resulting in sub-optimization for the majority of anticipated shipments). Specific fuel designs or attributes (e.g. fuel length, assembly decay heat limits, or burnup limits) not allowed by the cask design concepts must be identified.	Pre-bid Q&A agreed to exclude South Texas Project Fuel (192" long). Exclude AP1000 XL Robust due to the length. Need to consider stainless clad fuel, due to activation products (Cobalt). Need to consider MOX. Won't consider next generation fuels.	Functional Criteria

No.	Functional Criteria, Constraints and Assumptions, which apply to the Development of the TO17 SNF Transportation Casks	Notes	Type
15	The transportation casks shall be capable of being closed and reopened multiple times, so the cask can be reused for many shipments. The method for closing and reopening shall be described. Factors limiting the possible number of times that the cask can be reused shall be identified, along with possible means for extending life and reusability of the casks.	Pre-bid Q&A stated that loading operation will be wet. Unloading will be wet as well.	Functional Criteria
16	The loaded and closed DFCs shall also be capable of being reopened, to allow assembly repackaging, and the method for reopening shall be described. The DFCs shall be vented at the top and bottom.	Per Jeff Williams, main objective of TO 17 is to understand the price (cost, time, infrastructure, etc.) we'll pay if DFCs are used for all high burnup fuel assemblies.Per assembly cost associated with using DFCs. Around $10K each and an assumed reduction of capacity to use DFCs.	Functional Criteria
17	The cask systems must be able to accommodate both boiling water reactor (BWR) and PWR fuel.	Initial Results from Technical Interface Meetings **PWR** Target # of Intact Fuel Assemblies = 32 Target # of DFCs = 28 **BWR** Target # of Intact Fuel Assemblies = 68 Target # of DFCs = 61 or 57	Functional Criteria
18	Cask Body + Inner Lid + yoke - Maximum Weight = 169,000 lbs	Initial Results from NAC/ES Technical Interface Meetings - For 125 Ton cask. Hoping that this can be lowered.	Functional Criteria
19	Basket + Fuel + Water - Maximum weight = 81,000 lbs	Initial Results from NAC/ES Technical Interface Meetings - For 125 Ton cask	Functional Criteria
20	Cask ID = 70"	Initial Results from NAC/ES Technical Interface Meetings - For 125 Ton cask	Functional Criteria
21	Cask Length = 180"	Initial Results from NAC/ES Technical Interface Meetings - For 125 Ton cask. Will accommodate Palo Verde (CE System 80, 178" long), but not AP1000 (Vogtle 3&4, VC Summer 2&3), which is around 188.8" long. Email from Jack Wheeler on 9/29/14: "Following up on your inputs and bi-weekly discussions regarding assumed fuel length, for the purposes of the Task Order 17 study, we propose a requirement that the cask concepts be able to accommodate fuel assemblies with an assumed post-irradiation fuel assembly length of up to 180 inches without non-fuel components (NFCs). Also we propose that the cask concepts be capable of accommodating shorter length fuel assemblies containing NFCs which do not require special handling, provided the total post irradiation length (assembly with NFC) does not exceed 180 inches. "	Functional Criteria
22	Target Total Cask Heat Load = 24kW	Initial results from NAC/ES Technical Interface meetings. NAC will look to see if heat load can be increased.	Functional Criteria

No.	Functional Criteria, Constraints and Assumptions, which apply to the Development of the TO17 SNF Transportation Casks	Notes	Type
23	For 100 Ton: Cask ID = 57" Cask Body Wt = 132,300 lbs Inner lid wt = 5018 lbs Total cask body + inner lid = 137,318lbs	Per George's calculation assuming same shielding basis (3.25 Pb-5.5 NS4FR) as the 169,000 lbs cask body	Functional Criteria
24	EPDM seals	Agreed during Workshop # 2	Functional Criteria
25	Single lid design	Agreed during Workshop # 2	Functional Criteria

Day 2

Option Identification / Down-Select

Taking the starting point of a MAGNATRAN type bare fuel cask that can take 32 bare PWR assemblies or 28 PWR assemblies in DFCs, and 68 bare BWR assemblies and 61 or 57 BWR fuel assemblies in DFCs, the Team used the SCAMPER brainstorming technique, in order to identify options. The output from this work is shown below, which includes notes to explain decisions that were made during the evaluation and down-selection of the options.

SUBSTITUTE

- Use borated aluminum [Discounted by the group due to the desire to use proven materials, the licensing risk associated with this material and the perceived limited benefit.]
- Utilize a proprietary neutron shield. Higher heat capacity (32 kW) bare fuel casks (AREVA NUHOMS MP 197 HB and Holtech Hi Star 180) have been licensed by NRC this year *[Group agreed to keep on the radar, however, it is important to note that both of these casks are heavy and currently only used on Europe]*.
- Depleted Uranium shield [Discounted by the group due to difficulties with forming and machining this material. It also has limitations with regards to thermal performance].
- Copper gamma shield [Discounted by the group due to the expense, weight penalty and a spent fuel pool chemistry issue for exposed copper].
- If water is not removed from the cask before it is lifted from the pool, then it is likely that maximum number of assemblies will be 24.
- Copper neutron shield jacket, which is great for heat transfer [*Group agreed to keep this option for further evaluation*].
- Make a square cask rather than a right circular cylinder [Group discounted this option because fabrication is more difficult and keeping the weight down is the biggest challenge, rather than capacity].

COMBINE

- Any new approach to design and analysis will have licensing challenges.
- Could have a low heat cask and a high heat cask [*Group agreed to park this idea*].
- Apply a systems approach and start with the predicted inventory and determine what heat load we will need.

ADAPT

- How will our designs adapt to changing fuel demographics?
- Transportation and storage [are there benefits to having a cask that is also certified for storage?].
- Utilize physical confirmation testing to optimize thermal capacity [*need to utilize proven materials*].
- Have the flexibility to change the basket design.

MODIFY

- Make the cask octagonal. [Group discounted this option because fabrication is more difficult and keeping the weight down is the biggest challenge, rather than capacity].
- Use active cooling. [Group discounted this option due to licensing risk].
- Liquid neutron shielding. [Has a limited benefit, but worth keeping on the radar].
- Whatever we do the fuel can't be exposed to air.
- Transfer water filled basket out of the pool using a shielding bell [*Group discounted due to there being no benefit for this method]*.

PUT TO ANOTHER USE

- Transport and Storage – How long can a filled transport-only cask be held pending the filling of other casks as part of a single rail shipment, i.e. 3 to 5 rail casks?

ELIMINATE

- Use only one lid with 2 seals, which means that we won't be able to implement ISG-19 [*Group decide to evaluate this option*].
- Eliminate weight by going to a different shape [Discounted for same reasons as the "Modify" and "Adapt" brainstorming options].
- Reduce weight by going to a borated aluminum basket. [Discounted by the group due to the desire to use proven materials, the licensing risk associated with this material and the perceived limited benefit.]
- Don't use 4 trunions; assume cranes used are single failure proof.
- Pump out water prior to lifting the cask from the pool, due to the weight challenges we currently have. If we don't do this, then the number of PWR assemblies will decrease from 32 to 24. [*Group agreed to pursue this option further*].

REVERSE

- Load fuel assemblies into a "test tube" rack and load out of the pool in a transfer cask [Although this method will reduce the under the hook weight, you are moving the bare fuel cask towards a DPC type system].

Day 3

On the last day of the workshop, the team confirmed the selection of options and planned the work to be performed during Phase 3, which is described below. It was also noted that the cask body and basket will stay together due to the impracticality of having a series of baskets and using them with the cask body in the form of a "plug and play" arrangement. This is because practical experience with removing baskets from cask bodies is that it is hard and physically messy. NAC's advice was that you do not want to do this.

1. Weight Reduction
    - Look at different materials
    - Pump water out in pool prior to lifting
    - Will be an interactive process with:
        - 1st Pass Shielding Analysis
        - 1st Pass Criticality Analysis (already performed initial work)
        - 1st Pass Thermal Analysis
        - 1st Pass Structural Analysis
2. Analyze Inventory
    - Will show that we can take 62.5 GWd/MT @ 5yr cooled
    - Will proposed concepts work for the future inventory with regards to burnup, enrichment and plant operating status (operating or shutdown (with pool))?
3. Work on concepts for 32P/28P (DFCs) and 68B / 61B or 57B - DFCs). Also need to consider mixing in DFC cells with the intact PWR and BWR basket designs to determine what the impact will be. [Thoughts are that for the PWR basket, mixing in DFCs will result in reduced capacity, but there may be an opportunity to fit DFCs in with the 68 BWR basket design.
4. Look at improving Thermal Capacity Beyond 24kW
5. List of what bare fuel casks exist today and what could be used to ship bare fuel

APPENDIX B - RESULTS FROM FACILITATED WORKSHOP # 2 (INCORPORATING THE INITIAL PROGRESS REVIEW), COLUMBIA, MD, OCTOBER 28 - 29, 2014

The second workshop was held from October 28th to October 29th, 2014, at Energy*Solution*s offices in Columbia, Maryland, with Day 1 comprising the Initial Progress Review Meeting with DOE, and Day 2 comprising a facilitated Team meeting.

For the Initial Progress Review Meeting on Day 1, meeting notes were issued to the DOE and due to the in-progress work presented during this meeting being subsequently advanced and presented in the main body of this report, the complete notes are not reproduced in this Appendix. Pertinent to the following notes for Day 2 of the second workshop are the following actions from the Initial Progress Review Meeting:

1. Check the maximum weight used for a PWR assembly – **Steve Sisley.**

2. Address the internal cleaning of casks in the Equipment Maintenance section of the technical report – **Energy*Solutions* Team.**

3. Ensure that excessive time is not spent analyzing a worst-case cask containing twelve 62.5 GWd/MT, 5 year cooling, and evaluate interim cases, e.g. a cask containing four 62.5 GWd/MT, 5 year cooled assemblies and the rest lower burn-up – **Jim Hopf.**

4. Ensure that basket designs prevent fuel assemblies catching on the wrappers (protect neutron poison material) around the cells as they are inserted into the fuel basket, e.g., provide lead-ins, or use metal matrix poisons – **Steve Sisley.**

5. For the 28 PWR DFC and 61 BWR basket criticality analyses, consider reconfiguration of 4 to 8 of the assemblies at the periphery of each basket. (Note. Hold any work pending a response from DOE on Action # 6) – **Jim Hopf.**

6. Provide direction on the criticality analysis assumptions to be used for the 28 PWR and 61 BWR DFC baskets for the reconfiguration of damaged fuel – **Jack Wheeler.**

7. Look at the benefits of a shorter than 180” length cask **-Steve Sisley and Jim Hopf.**

8. Look at the thermal performance of a painted carbon steel cask body versus the currently proposed stainless steel cask body – **George Carver.**

For Day 2, the meeting was attended by representatives from the Team and covered the following topics:

- Review feedback from Initial Progress Review Meeting
- Assessment of design concepts developed to date
- Planning for work to be completed

Review feedback from Initial Progress Review Meeting

The team reviewed the eight actions raised during the Initial Progress Review Meeting and the following key points were noted during the discussion.

1. For the fuel basket designs the focus will be on eliminating the use of wrappers to protect the neutron poisons and instead looking to use metal matrix poisons.

2. Regarding the actions that pertain to how many DFCs in the 28P and 61B baskets will be assumed to be reconfigured for the purpose of criticality analysis, there could be three potential positions regarding high burn-up (HBU) fuel: (1) No DFCs, (2) All HBU in DFCs, but only a fraction is reconfigured, (3) All fuel is placed in DFCs because it is assumed that all DFC fuel is reconfigured. Under this latter scenario, we would have to (a) reduce the capacity of the PWR DFC basket from 28 assemblies to 24 assemblies or (b) go to moderator exclusion by adding an extra lid; thereby increasing the total weight by 9000 lbs.

3. ISG-19 does not appear to require two lids for a directly loaded cask, but Bill Brach believes NRC would rely on two boundaries to preclude water in-leakage.

4. Regarding the action pertaining looking at a shorter than 180" cask, due to the potential benefits associated with it, the following question was posed: "Are we considering one BWR cask: regular (180" long) and thick shielding, and two PWR casks: regular and thin shielding, and a short (171") and thick shielding?

Assessment of design concepts developed to date

Building on the question in Item 4, above, the team considered several configurations of casks and fuel baskets, to arrive at an optimal combination for the fuel inventory that is being considered under Task Order 17. The agreed upon combination is shown in Figure B-1 below. It also was agreed that a graphic needs to be produced which shows how each cask/basket combination accommodates a portion of the SNF inventory.

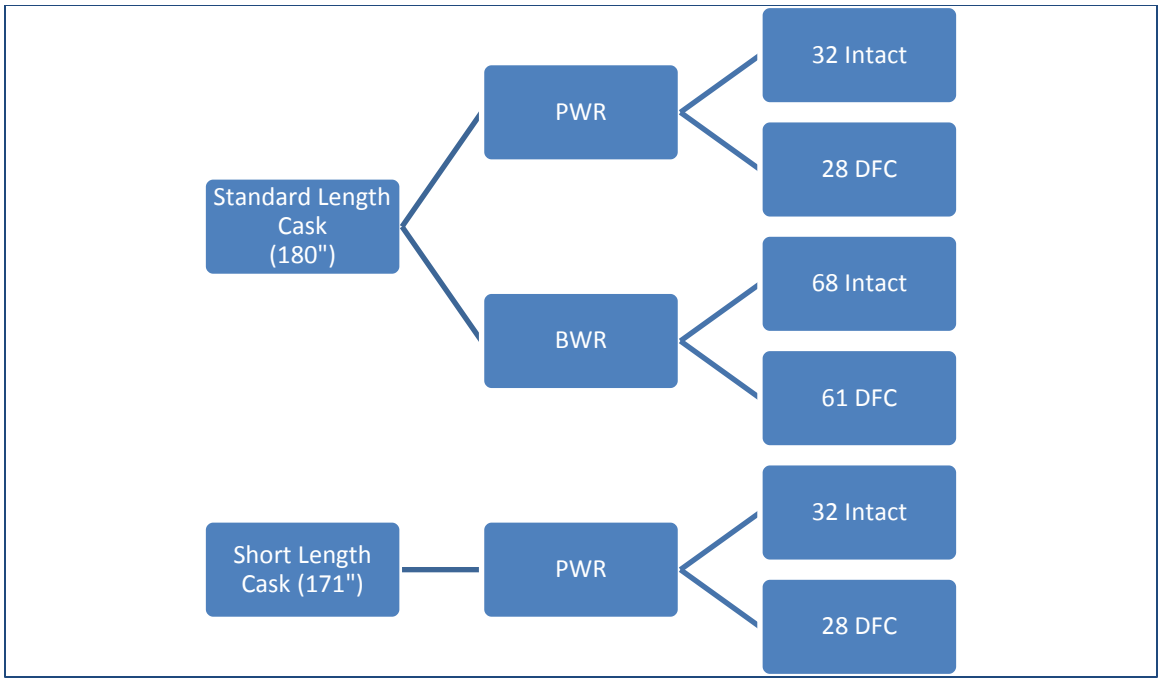

Figure B-1. Cask and Basket Combinations

With regards to cask and basket combinations, the following points were noted:

1. Common shielding analyses will be used for the six cask/basket combinations shown in Figure B-1, above.
2. We could design a 37 PWR basket for the population of Westinghouse fuel. Will discuss in Section 15 of the Technical Report.
3. More shielding equals less cooling time.
4. BWR fuel needs more shielding due to the higher source term, but has a lighter payload, which compensates for the weight increase due to the shielding.
5. The short length PWR cask accommodates 80% of the fuel inventory.
6. The regular cask payload will be lighter than the payload for the shorter cask. The weights for the PWR regular cask and the PWR short cask should be roughly the same.
7. Nothing for the above combinations of casks and baskets, based on the current design concepts, is “outside the norm” with regards to fabrication.

With regard to licensing, the newly designed impact limiters will require testing (impact and possibly fire tests, and puncture test if pin engages impact limiter). The review will be a complex review, but only one application will be required.

Planning for work to be completed

In considering work to be completed, the following notes were recorded.

1. Unloading bare fuel casks will not be dose intensive.
2. Loading bare fuel casks will be dose intensive, due to lots more hands on work close to the cask.
3. Need to look at MAGNOX cask experience at Sellafield in the UK regarding the cleaning of cask internals and fleet management of casks.
4. There will be loading time impacts if DFCs are loaded into the same basket as intact assemblies.
5. Loading a DFC basket will take longer due to handling.
6. Regarding special features that could optimize the cask designs, improving the vacuum drying process is one area that should be looked at. There are automated, optimized, vacuum drying systems and one site uses this system.
7. The water remaining in a cask can ice up if you dry too quickly. Also, the presence of water is detected by the vacuum drying system being unable to hold a vacuum.

APPENDIX C - CROSS-REFERENCE BETWEEN TASK ORDER 17 SCOPE OF WORK AND THE SNF TRANSPORTATION CASK DESIGN STUDY REPORT

Statement of Work Section	Statement of Work Requirement	SNF Transportation Cask Study, Section No.
Scope of Work		
2	Using experience designing, licensing, and supplying SNF cask systems to commercial utilities in the U.S. and any information supplied by DOE, the Contractor(s) shall	
2	1) Develop a reusable SNF rail-type transportation cask system design concept optimized for transport of intact bare (not canistered) SNF. The cask system is not required to support long-term SNF storage, but must be capable of satisfying the requirements listed under item 7 below. Variations of the cask to accommodate PWR assemblies and to accommodate BWR assemblies shall be provided.	Section 4.1
2	2) Develop a reusable SNF rail-type transportation cask system design concept optimized for transport assuming all SNF assemblies are in DFCs. This cask system includes the DFCs. The cask system is not required to support long-term SNF storage, but must be capable of satisfying the requirements listed under item 7 below. Variations of the cask to accommodate PWR assemblies and to accommodate BWR assemblies shall be provided.	Section 4.1
2	3) For each design concept described in items 1 and 2 above, develop estimates of the up-front costs associated with design, analysis, testing, and licensing the cask and of the cost to fabricate the entire transport cask system, including cask internals and impact limiters. An estimated unit cost for a cask should be provided as a function of the number of casks produced. The estimated cost for cask handling equipment at the shipping and receiving site is also to be provided.	Section 10
2	4) For each design concept described in items 1 and 2 above, develop a concept of operations, including assessments of the time and motion required for loading the fuel at the reactor pools and unloading from the transport casks. Also, provide the anticipated worker dose for performing these operations. For the cask design concept described in item 2 above, these operational steps shall include loading assemblies into DFCs for transport and unloading the DFCs at the receiving facility. The system design concept and associated concept of operations shall seek to achieve operational efficiencies and worker exposures that are comparable with, if not better than, current practice of loading DFCs and SNF into non-canistered transportation systems. A comparison of the estimated time requirements and worker exposures to those currently incurred in loading bare fuel casks and also in loading dual-purpose (storage and transport) SNF canisters shall be provided for comparison purposes.	Section 5.1 Section 5.2 Section 5.3

Statement of Work Section	Statement of Work Requirement	SNF Transportation Cask Study, Section No.
2	5) Identify equipment maintenance requirements including testing, maintenance, and performance requirements for structures, systems and components (SSCs) important to safety.	Section 6.1 Section 6.2 Section 6.3
2	6) Provide additional key information associated with each of the SNF transportation cask system design concepts, including information on dimensions, component masses, total mass for both fully loaded and unloaded conditions, maximum thermal loading, and estimated dose rates during NCT. Also provide supporting analyses indicating that the transportation cask system, including the cask, impact limiters, and DFCs (when applicable), would be licensable and usable for transportation under 10 CFR Part 71.	Executive Summary, Table ES-2 Section 4.1.1, Table 4-1 Section 4.1.2, Table 4-2 Appendix D Appendix E Section 9
2	7) Cask System Requirements: In addition to providing reasonable assurance that the cask concepts would be capable of meeting 10 CFR Part 71 requirements, the casks system must be able to meet the following requirements:	
2	a. The system design concept, including impact limiters, will have a maximum width of 128 inches. The reason for this limit is that DOE intends to transport this cask on railcars that conform to Association of American Railroads (AAR) Standard S-2043, which allows a maximum railcar width of 128 inches. See paragraph 4.7.9.1 of Standard S-2043. The cask design concept, including impact limiters, shall not be wider than this maximum railcar width.	Section 4.1.1.
2	b. The system must allow for the transportation of high-burnup fuel (>45GWd/MTU) with a target of transporting fuel with an average assembly burnup of up to 62.5GWd/MT with up to 5.0 wt% enrichment and out-of-reactor cooling time of 5 years.	Section 4.2.3 Section 4.2.4 Section 4.3.2.2 Section 4.3.3 Section 8
2	c. Reasonable assurance that the design concepts can accommodate essentially the entire existing and future inventory of commercial light-water reactor SNF must be provided, without undue penalty (e.g., reduced cask capacity resulting in sub-optimization for the majority of anticipated shipments). Specific fuel designs or attributes (e.g., fuel length, assembly decay heat limits, or burnup limits) not allowed by the cask design concepts must be identified.	Section 4.2

Statement of Work Section	Statement of Work Requirement	SNF Transportation Cask Study, Section No.
2	d. In addition to the NRC's regulations, design activities shall also consider applicable regulatory guides and recent licensing experience and actions related to transportation cask design, fabrication, and operations. Any applicable US Department of Transportation (DOT) requirements and constraints of AAR S-2043 that may have an impact on cask design shall also be considered.	Section 9
2	e. The cask system for DFCs in all positions will place constraints on capacity due to the size of the DFCs. The design concepts should satisfy all appropriate regulatory and operational limits, while maximizing capacity.	Section 4
2	f. The transportation casks shall be capable of being closed and reopened multiple times, so the cask can be reused for many shipments. The method for closing and reopening shall be described. Factors limiting the possible number of times that the cask can be reused shall be identified, along with possible means for extending life and reusability of the casks.	Section 5.1
2	g. The loaded and closed DFCs shall also be capable of being reopened, to allow assembly repackaging, and the method for reopening shall be described.	Section 4.1.1
2	h. Consistent with current industry designs, the DFCs shall be vented at the top and bottom.	Section 4.1.1
2	8) To cover the trade space between the two design concepts described in items 1 and 2 above, a study to assess how important cask attributes, such as capacity and cost, are expected to vary as the number of assemblies in DFCs which the cask must be able to accommodate is varied. For the cask described in item 1, the study results would provide information on what the estimated impacts would be if some locations for DFCs were included in the cask along with locations for intact bare fuel assemblies.	Section 11
2	9) Consideration of any special features which could be introduced into the cask design concepts which would allow for optimization, such as increased capacity, reduced cost, and/or reduced maintenance shall be explored by the Contractor, the results of which are to be made available in the final report.	Section 12 Section 13

Statement of Work Section	Statement of Work Requirement	SNF Transportation Cask Study, Section No.
Applicable Codes, Standards, and Standards		
3	The design and supporting analysis work shall be performed so that the cask can comply with NRC regulations, applicable regulatory guides and industry standards. The Contractor shall prepare the transportation cask system design concepts and the final report as a Quality Rigor Level (QRL) 3 deliverable, i.e., it should receive an independent technical review by the Contractor and a quality assurance cover sheet should be provided in accordance with the Fuel Cycle Technologies Quality Assurance Program Document (FCT QAPD), Revision 2.	Technical Review performed and documented via FCT Document Cover Sheet.

APPENDIX D - TRANSPORTATION CASK DESIGN CONCEPT DRAWINGS

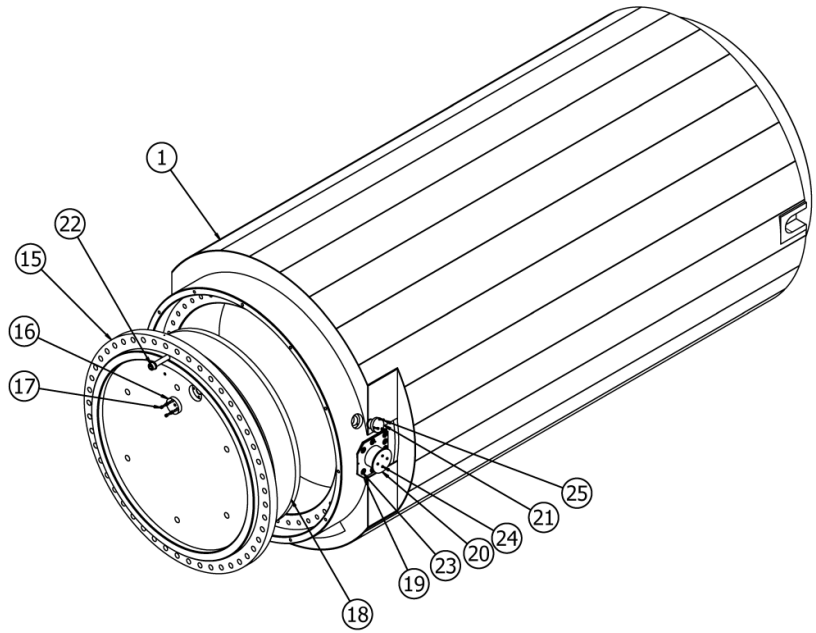

REV	CHANGE
0	INITIAL ISSUE

97	98	99	ITEM	NAME	MATERIAL	SPEC	DRAWING No.	DESCRIPTION
		3	25	SIDE PORT SCREW	INCONEL ALLOY	COML		
		8	24	TRUNNION CAP SCREW	ST. STL.	COML		
		18	23	TRUNNION SCREW	ST. STL.	COML		
		48	22	LID SCREW	INCONEL ALLOY	ASME		BAR
		1	21	SIDE PORT COVER	17-4PH ST. STL.	ASME		BAR
		2	20	TRUNNION CAP	304 ST. STL.	ASME		PLATE/BAR
		2	19	TRUNNION	17-4PH ST. STL.	ASME		PLATE/BAR
		1	18	SPACER	6061-T6 ALUMINUM	ASTM		PLATE
4			17	LID PORT COVER SCREW	INCONEL ALLOY	COML		
1			16	LID PORT COVER	17-4PH ST. STL.	ASME		PLATE/BAR
1			15	LID	17-4PH ST. STL.	ASME		PLATE/FORGING
		1	14	LID ASSEMBLY			NAC-TO17-97	
	1		13	OUTER CASING	304 ST. STL.	ASTM		1/4 PLATE
	1		12	N/S FINS	B-152 COPPER	ASTM		1/4 PLATE
	1		11	NEUTRON SHIELD	NS-4-FR	COML		
	1		10	ROTATION POCKET, LH	304 ST. STL.	ASME		PLATE/BAR
	1		9	ROTATION POCKET, RH	304 ST. STL.	ASME		PLATE/BAR
	1		8	SHEAR RING	304 ST. STL.	ASME		PLATE/BAR
	1		7	LEAD	LEAD	ASTM		LEAD POUR
	1		6	OUTER SHELL	XM-19	ASME		PLATE
	1		5	BOTTOM RING	304 ST. STL.	ASME		FORGING
	1		4	INNER SHELL	304 ST. STL.	ASME		PLATE
	1		3	TOP FORGING	304 ST. STL.	ASME		FORGING
	1		2	BOTTOM FORGING	304 ST. STL.	ASME		FORGING
		1	1	CASK BODY ASSEMBLY			NAC-TO17-98	
ASSY	ASSY	ASSY						
QUANTITY								

UNLESS OTHERWISE STATED
DIMENSIONING AND TOLERANCING SHALL BE PER ASME Y14.5M-94.
UNSPECIFIED DIMENSIONAL TOLERANCES ARE SHOWN BELOW

DEC	UNDER 3	±.001
	3 - 12	±.005
	OVER 12	±.010
FRC	UNDER 6	±.02
	6 - 18	±.03
	OVER 18	±.06
ANG	ALL	±1°
FRACTIONAL ±1/8		
ANGLES ±1/2°		

ALL THREAD DEPTH CALLOUTS ARE TO BE CONSIDERED AS A MIN DEPTH OF PERFECT THREADS. THE ACTUAL DEPTH OF THE THREADS IS NOT SUBJECT TO TOLERANCE CONTROLS.

WEIGHTS ARE APPROXIMATE AND ARE TO BE USED FOR HANDLING PURPOSE ONLY.

ALL DIMENSIONS ARE IN INCHES

BORDER SIZE: F (40.X.28)

ALL UNSPECIFIED TOOL RADII .015 - .030

BREAK ALL SHARP CORNERS .015 - .030

MACHINED SURFACES TO BE 125 OR BETTER

NEXT ASSEMBLY: N/A

DRAWING TYPE: DESIGN

GROUP	NAME	DATE
PREPARER		
CHECKER		
PROJECT MANAGER		
ENGINEERING		
LICENSING		
QUALITY		

NAC INTERNATIONAL

TASK ORDER-17, TRANSPORT CASK ASSEMBLY

PROJECT	DRAWING	REV
NAC-TO17	001	0

SCALE N. T. S. | WEIGHT AS NOTED | SH 1 OF 2 | 12/12/2014

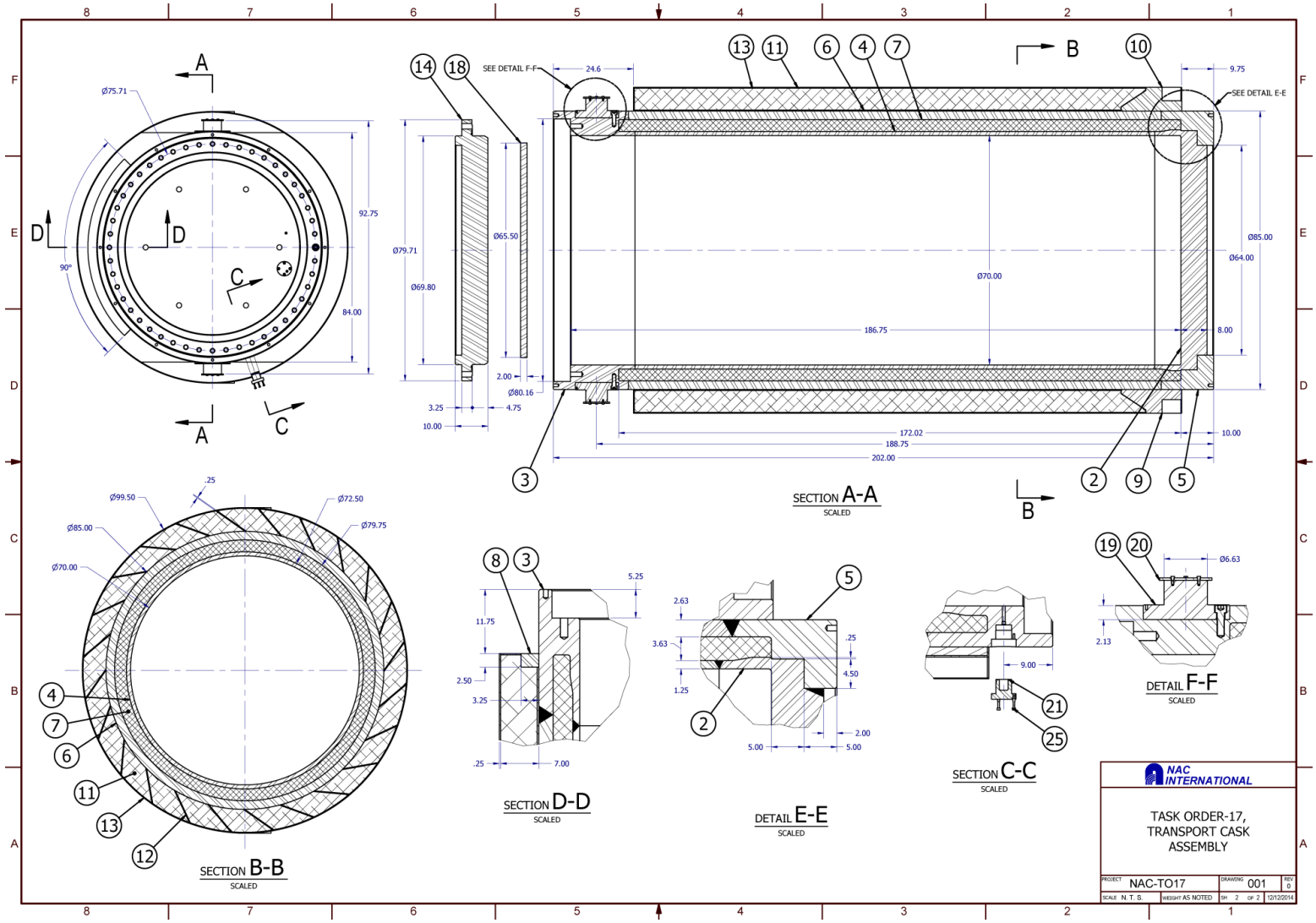
SECTION A-A
SCALED
SEE DETAIL F-F
SEE DETAIL E-E
SECTION B-B
SCALED
SECTION D-D
SCALED
DETAIL E-E
SCALED
SECTION C-C
SCALED
DETAIL F-F
SCALED
NAC INTERNATIONAL
TASK ORDER-17, TRANSPORT CASK ASSEMBLY
NAC-TO17
001
N. T. S.
AS NOTED
12/12/2014